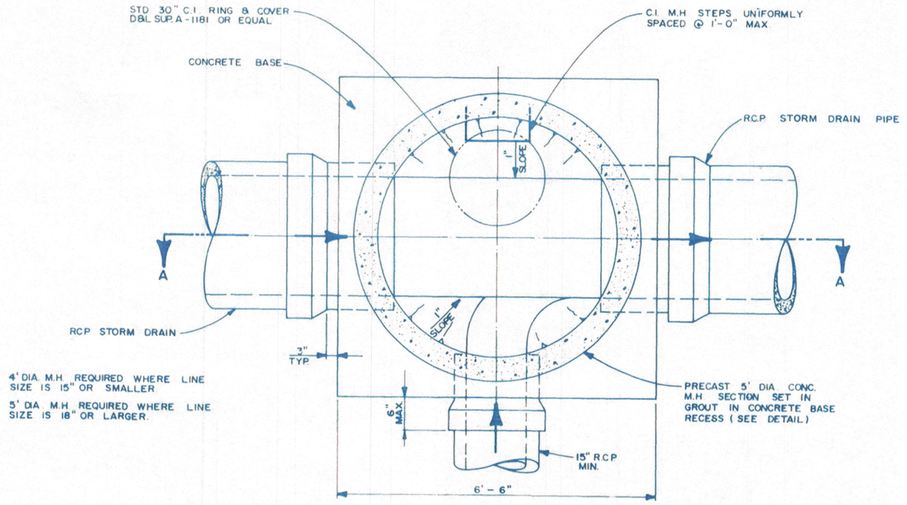

JUNCTION MANHOLE PLAN

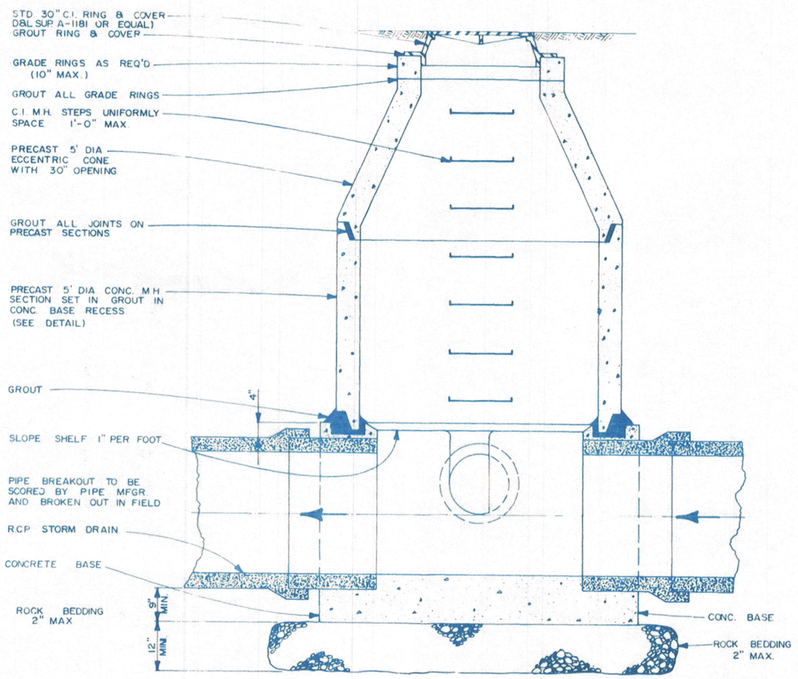

1 MANHOLE
SCALE: N.T.S.

TYPE B

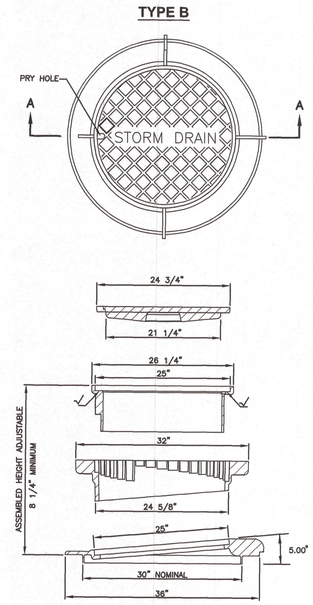

SECTION A-A

2 30" FRAME AND COVER
SCALE: N.T.S.

MHTN
ARCHITECTS
MHTN Architects, Inc.
420 East South Temple
Suite 100
Salt Lake City, Utah 84111
Telephone (801) 595-6700
Telefax (801) 595-6717
www.mhtn.com

NV5
BEYOND ENGINEERING
5217 So. State Street
Suite 200
Murray, Utah 84107
801-743-1300

WEBER SCHOOL DISTRICT

WEST WEBER ELEMENTARY

WEBER SCHOOL DISTRICT

4178 WEST 900 SOUTH OGDEN, UT AND 84404

©2011 MHTN ARCHITECTS, INC.
Drawings, written material, and design concepts shall not be used or reproduced in whole or part in any form or format without prior written consent of MHTN Architects, Inc. Do not scale drawings. Use given dimensions only. If not shown, verify correct dimensions with the Architect. Contractor shall check and verify all dimensions and conditions at job site.

SEAL

LICENSED PROFESSIONAL ENGINEER
No. 4770481
PAUL S. FESER
CIVIL
STATE OF UTAH

MHTN PROJECT NO. 2012545.00

DRAWN BY: BP CHECKED BY: PF

ISSUED:

NO.	DATE	DESCRIPTION
1	1/28/2014	CONSTRUCTION DOCUMENTS

CONTRACTOR TO VERIFY DRAWINGS IN FIELD USE REFLECT LAST REVISION DATE.

NO.	DATE	DESCRIPTION

SHEET NAME

STORM DRAIN DETAILS

CONSTRUCTION DOCUMENTS

SHEET NUMBER

CE-605

DATE: 1/28/14 TIME: 8:35:57 AM DRAWING NAME: CE-605.DWG
SERVER: PAGE SETUP: PDF-C3D-30x42 LAYOUT: NV5 - CIVIL
PATH: N:\SUBBOTO\CADD\P DESIGNER: JST PROJ. MGR: PF
BP XREFS: MHTN - 30x42, EXMA, EXPN, IPNOTES, EXUT, PRPN