SUMMIT AT POWDER MOUNTAIN
PHASE 1C - COPPER CREST ROAD
ROADWAY AND UTILITY CONSTRUCTION DRAWINGS

Located in Sec 01 T7N R1E
Weber County, Utah

SHEET INDEX:

	SHEET NO.	SHEET DESCRIPTION
1	1.00	CIVIL TITLE SHEET
2	1.01	GENERAL NOTES, LEGEND, AND KEYNOTES
3	1.02	OVERALL UTILITY
4	1.03	OVERALL GRADING
5	1.04	TYPICAL ROADWAY SECTION
6	2.00	PLAN & PROFILE – COPPER CREST ROAD
7	3.00	EARTHWORK & SECTIONS – COPPER CREST ROAD
8	4.00	EROSION CONTROL PLAN – COPPER CREST ROAD
9	5.00	SEWER DETAILS
10	5.10	ELECTRICAL DETAILS
11	5.20	MISCELLANEOUS DETAILS

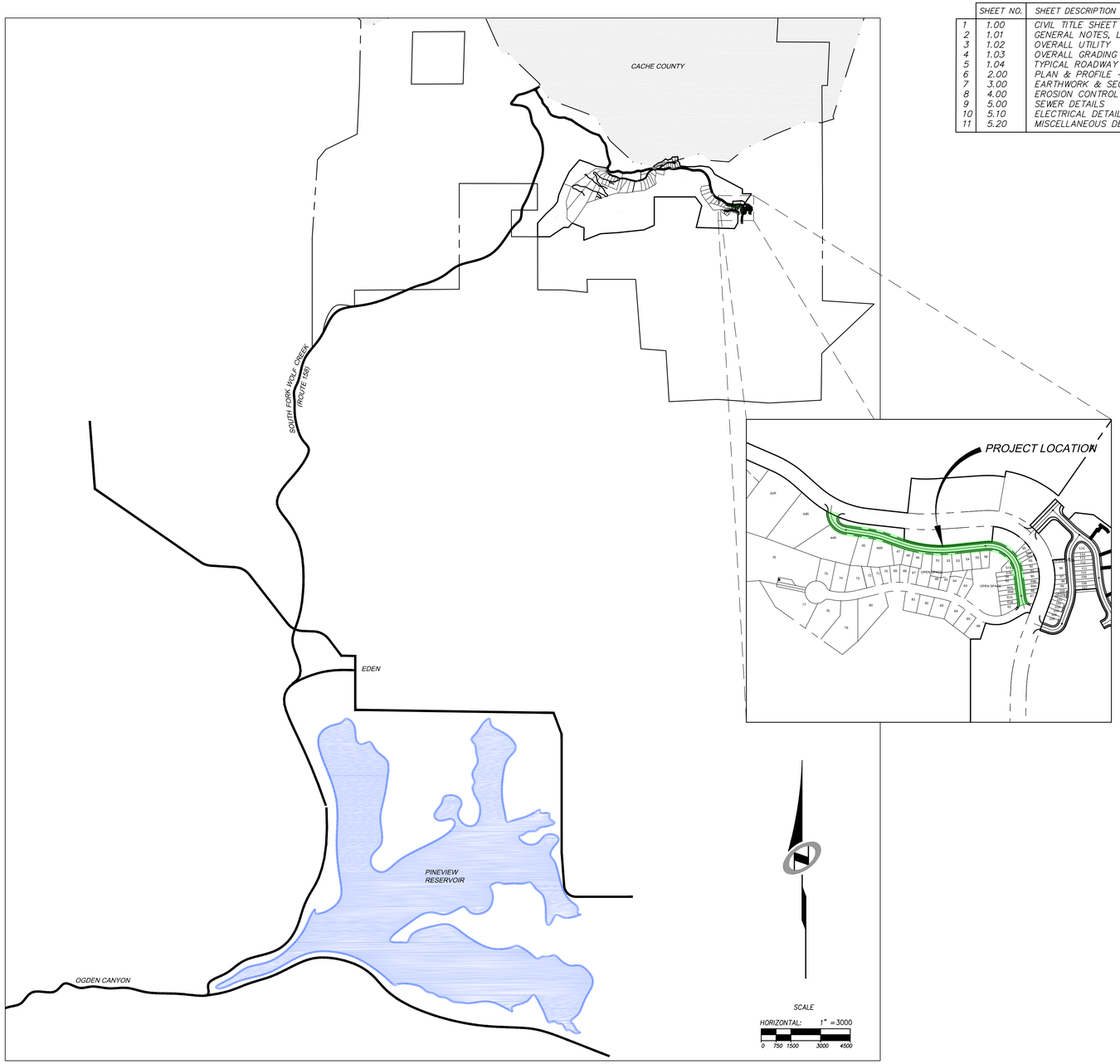

CALL BEFORE YOU DIG! BLUE STAKES 1 800 662 4111

NO.	BY	DATE	REVISIONS

CAUTION
The engineer preparing these plans will not be responsible for, or liable for, unauthorized changes to or uses of these plans. All changes to the plans must be in writing and must be approved by the preparer of these plans.

PHASE 1C CONSTRUCTION
CIVIL TITLE SHEET

DATE SUBMITTED: 9/24/2013
PREPARED FOR: SUMMIT, LLC

NV5
BEYOND ENGINEERING
5217 SOUTH STATE STREET, SUITE 200
801.743.9300 TEL 801.743.9300 FAX
MURRAY, UT 84107
WWW.NV5.COM

REGISTERED PROFESSIONAL ENGINEER
No. 7899506
RYAN W. CATHEY
9/24/13
STATE OF UTAH

SHEET NUMBER
1.00

SCALE
VERTICAL: 1"= NA
HORIZONTAL: 1"= 3000'

JOB NUMBER
SLB079306

DATE: 9/24/13 TIME: 4:57:05 AM DRAWING NAME: JP100T.DWG
SERVER: NONE PAGE SETUP: ---- LAYOUT: Layout1
PATH: N:\SLB0793\CADD\PHASE 1\JP\P1-C DESIGNER: #### PROJ. MGR: ####

BOWLDEN KREFS

DATE: 9/24/13 TIME: 4:59:32 AM DRAWING NAME: IP1C01A.DWG
SERVER: NONE PAGE SETUP: PDF-c30-24x36 LAYOUT: Layout1
PATH: N:\SLB0793\CADD\PHASE 1\IP1-C DESIGNER: #### PROJ. MGR: ####

GENERAL NOTES

1. ALL CONSTRUCTION MUST STRICTLY FOLLOW THE STANDARDS AND SPECIFICATIONS SET FORTH BY: GOVERNING UTILITY MUNICIPALITY, GOVERNING CITY OR COUNTY (IF UN-INCORPORATED), INDIVIDUAL PRODUCT MANUFACTURERS, THE DESIGN ENGINEER, AND AMERICAN PUBLIC WORKS ASSOCIATION (APWA). THE ORDER LISTED ABOVE IS ARRANGED BY SENIORITY. IF A CONSTRUCTION PRACTICE IS NOT SPECIFIED BY ANY OF THE LISTED SOURCES, CONTRACTOR MUST CONTACT DESIGN ENGINEER FOR DIRECTION.
2. CONTRACTOR TO STRICTLY FOLLOW GEOTECHNICAL RECOMMENDATIONS FOR THIS PROJECT. ALL GRADING INCLUDING BUT NOT LIMITED TO CUT, FILL, COMPACTION, ASPHALT SECTION, SUBBASE, TRENCH EXCAVATION/BACKFILL, SITE GRUBBING, RETAINING WALLS AND FOOTINGS MUST BE COORDINATED DIRECTLY WITH THE PROJECT GEOTECHNICAL ENGINEER.
3. TRAFFIC CONTROL, STRIPING & SIGNAGE TO CONFORM TO CURRENT UDOT TRANSPORTATION ENGINEER'S MANUAL AND MANUAL OF UNIFORM TRAFFIC CONTROL DEVICES.
4. ANY AREA OUTSIDE THE LIMIT OF WORK THAT IS DISTURBED SHALL BE RESTORED TO ITS ORIGINAL CONDITION AT NO COST TO OWNER.
5. CONSULT ALL OF THE DRAWINGS AND SPECIFICATIONS FOR COORDINATION REQUIREMENTS BEFORE COMMENCING CONSTRUCTION.
6. AT ALL LOCATIONS WHERE EXISTING PAVEMENT ABUTS NEW CONSTRUCTION, THE EDGE OF THE EXISTING PAVEMENT SHALL BE SAWCUT TO A CLEAN, SMOOTH EDGE.
7. ALL CONSTRUCTION AND MATERIALS SHALL BE IN ACCORDANCE WITH THE MOST RECENT, ADOPTED EDITION OF ADA ACCESSIBILITY GUIDELINES.
8. PRIOR TO STARTING CONSTRUCTION, THE CONTRACTOR SHALL BE RESPONSIBLE FOR MAKING SURE THAT ALL REQUIRED PERMITS AND APPROVALS HAVE BEEN OBTAINED. NO CONSTRUCTION OR FABRICATION SHALL BEGIN UNTIL THE CONTRACTOR HAS RECEIVED THOROUGHLY REVIEWED PLANS AND OTHER DOCUMENTS APPROVED BY ALL OF THE PERMITTING AUTHORITIES.
9. CONTRACTOR IS RESPONSIBLE FOR SCHEDULING AND NOTIFYING ENGINEER OR INSPECTING AUTHORITY 48 HOURS IN ADVANCE OF COVERING UP ANY PHASE OF CONSTRUCTION REQUIRING OBSERVATION.
10. ANY WORK IN THE PUBLIC RIGHT-OF-WAY WILL REQUIRE PERMITS FROM THE APPROPRIATE, CITY, COUNTY OR STATE AGENCY CONTROLLING THE ROAD, INCLUDING OBTAINING REQUIRED INSPECTIONS.
11. ALL DIMENSIONS, GRADES & UTILITY DESIGNS SHOWN ON THE PLANS SHALL BE VERIFIED BY THE CONTRACTOR PRIOR TO CONSTRUCTION. CONTRACTOR SHALL NOTIFY ENGINEER OF ANY DISCREPANCIES PRIOR TO PROCEEDING WITH CONSTRUCTION FOR NECESSARY PLAN OR GRADE CHANGES.
12. CONTRACTOR MUST VERIFY ALL EXISTING CONDITIONS BEFORE BIDDING AND BRING UP ANY QUESTIONS BEFOREHAND.
13. SITE GRADING SHALL BE PERFORMED IN ACCORDANCE WITH THESE PLANS AND SPECIFICATIONS AND THE RECOMMENDATIONS SET FORTH BY THE GEOTECHNICAL ENGINEER.
14. CATCH SLOPES SHALL BE GRADED AS SPECIFIED ON GRADING PLANS.
15. CONTRACTOR SHALL BE RESPONSIBLE FOR ALL FLAGGING, CAUTION SIGNS, LIGHTS, BARRICADES, FLAGMEN, AND ALL OTHER DEVICES NECESSARY FOR PUBLIC SAFETY.
16. CONTRACTOR SHALL, AT THE TIME OF BIDDING AND THROUGHOUT THE PERIOD OF THE CONTRACT, BE LICENSED IN THE STATE OF UTAH AND SHALL BE BONDABLE FOR AN AMOUNT EQUAL TO OR GREATER THAN THE AMOUNT BID AND TO DO THE TYPE OF WORK CONTEMPLATED IN THE PLANS AND SPECIFICATIONS. CONTRACTOR SHALL BE SKILLED AND REGULARLY ENGAGED IN THE GENERAL CLASS AND TYPE OF WORK CALLED FOR IN THE PLANS AND SPECIFICATIONS.
17. CONTRACTOR SHALL INSPECT THE SITE OF THE WORK PRIOR TO BIDDING TO SATISFY HIMSELF BY PERSONAL EXAMINATION OR BY SUCH OTHER MEANS AS HE MAY PREFER OF THE LOCATION OF THE PROPOSED WORK AND OF THE ACTUAL CONDITIONS OF AND AT THE SITE OF WORK. IF, DURING THE COURSE OF HIS EXAMINATION, A BIDDER FINDS FACTS OR CONDITIONS WHICH APPEAR TO HIM TO BE IN CONFLICT WITH THE LETTER OR SPIRIT OF THE PROJECT PLANS AND SPECIFICATIONS, HE SHALL CONTACT THE ENGINEER FOR ADDITIONAL INFORMATION AND EXPLANATION BEFORE SUBMITTING HIS BID. SUBMISSION OF A BID BY THE CONTRACTOR SHALL CONSTITUTE ACKNOWLEDGMENT THAT, IF AWARDED THE CONTRACT, HE HAS RELIED AND IS RELYING ON HIS OWN EXAMINATION OF (1) THE SITE OF THE WORK, (2) ACCESS TO THE SITE, AND (3) ALL OTHER DATA AND MATTERS REQUISITE TO THE FULFILLMENT OF THE WORK AND ON HIS OWN KNOWLEDGE OF EXISTING FACILITIES ON AND IN THE VICINITY OF THE SITE OF THE WORK TO BE CONSTRUCTED UNDER THIS CONTRACT. THE INFORMATION PROVIDED BY THE ENGINEER IS NOT INTENDED TO BE A SUBSTITUTE FOR, OR A SUPPLEMENT TO, THE INDEPENDENT VERIFICATION BY THE CONTRACTOR TO THE EXTENT SUCH INDEPENDENT INVESTIGATION OF SITE CONDITIONS IS DEEMED NECESSARY OR DESIRABLE BY THE CONTRACTOR. CONTRACTOR SHALL ACKNOWLEDGE THAT HE HAS NOT RELIED SOLELY UPON OWNER- OR ENGINEER-FURNISHED INFORMATION REGARDING SITE CONDITIONS IN PREPARING AND SUBMITTING HIS BID.
18. CONTRACTOR SHALL BE RESPONSIBLE TO PROVIDE ALL WATER, POWER, SANITARY FACILITIES AND TELEPHONE SERVICES AS REQUIRED FOR THE CONTRACTOR'S USE DURING CONSTRUCTION.
19. CONTRACTOR SHALL BE HELD RESPONSIBLE FOR ANY FIELD CHANGES MADE WITHOUT PRIOR WRITTEN AUTHORIZATION FROM THE OWNER, ENGINEER, AND/OR GOVERNING AGENCIES.
20. CONTRACTOR SHALL EXERCISE DUE CAUTION AND SHALL CAREFULLY PRESERVE BENCH MARKS, CONTROL POINTS, REFERENCE POINTS AND ALL SURVEY STAKES, AND SHALL BEAR ALL EXPENSES FOR REPLACEMENT AND/OR ERRORS CAUSED BY THEIR UNNECESSARY LOSS OR DISTURBANCE.
21. CONTRACTOR SHALL ASSUME SOLE AND COMPLETE RESPONSIBILITY FOR JOBSITE CONDITIONS DURING THE COURSE OF CONSTRUCTION OF THIS PROJECT, INCLUDING SAFETY OF ALL PERSONS AND PROPERTY. THIS REQUIREMENT SHALL APPLY CONTINUOUSLY AND NOT BE LIMITED TO NORMAL WORKING HOURS. THE CONTRACTOR SHALL DEFEND, INDEMNIFY AND HOLD THE OWNER AND ENGINEER HARMLESS FROM ANY AND ALL LIABILITY, REAL OR ALLEGED, IN CONNECTION WITH THE PERFORMANCE OF WORK ON THIS PROJECT, EXCEPTING FOR LIABILITY ARISING FROM THE SOLE NEGLIGENCE OF THE OWNER OR THE ENGINEER.
22. CONTRACTOR SHALL BE RESPONSIBLE FOR ADEQUATELY SCHEDULING INSPECTION AND TESTING OF ALL FACILITIES CONSTRUCTED UNDER THIS CONTRACT. ALL TESTING SHALL CONFORM TO THE REGULATORY AGENCY'S STANDARD SPECIFICATIONS. ALL TESTING AND INSPECTION SHALL BE PAID FOR BY THE OWNER; ALL RE-TESTING AND/OR RE-INSPECTION SHALL BE PAID FOR BY THE CONTRACTOR.
23. IF EXISTING IMPROVEMENTS NEED TO BE DISTURBED AND/OR REMOVED FOR THE PROPER PLACEMENT OF IMPROVEMENTS TO BE CONSTRUCTED BY THESE PLANS, THE CONTRACTOR SHALL BE RESPONSIBLE FOR PROTECTING EXISTING IMPROVEMENTS FROM DAMAGE. COST OF REPLACING OR REPAIRING EXISTING IMPROVEMENTS SHALL BE INCLUDED IN THE UNIT PRICE BID FOR ITEMS REQUIRING REMOVAL AND/OR REPLACEMENT. THERE WILL BE NO EXTRA COST DUE TO THE CONTRACTOR FOR REPLACING OR REPAIRING EXISTING IMPROVEMENTS.
24. WHENEVER EXISTING FACILITIES ARE REMOVED, DAMAGED, BROKEN, OR CUT IN THE INSTALLATION OF THE WORK COVERED BY THESE PLANS OR SPECIFICATIONS, SAID FACILITIES SHALL BE REPLACED AT THE CONTRACTOR'S EXPENSE WITH MATERIALS EQUAL TO OR BETTER THAN THE MATERIALS USED IN THE ORIGINAL EXISTING FACILITIES. THE FINISHED PRODUCT SHALL BE SUBJECT TO THE APPROVAL OF THE OWNER, THE ENGINEER, AND THE RESPECTIVE REGULATORY AGENCY.
25. CONTRACTOR SHALL MAINTAIN A NEATLY MARKED SET OF FULL-SIZE AS-BUILT RECORD DRAWINGS SHOWING THE FINAL LOCATION AND LAYOUT OF ALL STRUCTURES AND OTHER FACILITIES. AS-BUILT RECORD DRAWINGS SHALL REFLECT CHANGE ORDERS, ACCOMMODATIONS, AND ADJUSTMENTS TO ALL IMPROVEMENTS CONSTRUCTED. WHERE NECESSARY, SUPPLEMENTAL DRAWINGS SHALL BE PREPARED AND SUBMITTED BY THE CONTRACTOR. PRIOR TO ACCEPTANCE OF THE PROJECT, THE CONTRACTOR SHALL DELIVER TO THE ENGINEER ONE SET OF NEATLY MARKED AS-BUILT RECORD DRAWINGS SHOWING THE INFORMATION REQUIRED ABOVE. AS-BUILT RECORD DRAWINGS SHALL BE REVIEWED AND THE COMPLETE AS-BUILT RECORD DRAWING SET SHALL BE CURRENT WITH ALL CHANGES AND DEVIATIONS REDLINED AS A PRECONDITION TO THE FINAL PROGRESS PAYMENT APPROVAL AND/OR FINAL ACCEPTANCE.
26. WHERE THE PLANS OR SPECIFICATIONS DESCRIBE PORTIONS OF THE WORK IN GENERAL TERMS BUT NOT IN COMPLETE DETAIL, IT IS UNDERSTOOD THAT ONLY THE BEST GENERAL PRACTICE IS TO PREVAIL AND THAT ONLY MATERIALS AND WORKMANSHIP OF THE FIRST QUALITY ARE TO BE USED.

GENERAL NOTES CONT.

27. CONTRACTOR SHALL BE SKILLED AND REGULARLY ENGAGED IN THE GENERAL CLASS AND TYPE OF WORK CALLED FOR IN THE PROJECT PLANS AND SPECIFICATIONS. THEREFORE, THE OWNER IS RELYING UPON THE EXPERIENCE AND EXPERTISE OF THE CONTRACTOR. PRICES PROVIDED WITHIN THE CONTRACT DOCUMENTS SHALL INCLUDE ALL LABOR AND MATERIALS NECESSARY AND PROPER FOR THE WORK CONTEMPLATED AND THAT THE WORK BE COMPLETED IN ACCORDANCE WITH THE TRUE INTENT AND PURPOSE OF THESE PLANS AND SPECIFICATIONS. THE CONTRACTOR SHALL BE COMPETENT, KNOWLEDGEABLE AND HAVE SPECIAL SKILLS IN THE NATURE, EXTENT AND INHERENT CONDITIONS OF THE WORK TO BE PERFORMED. CONTRACTOR SHALL ALSO ACKNOWLEDGE THAT THERE ARE CERTAIN PECULIAR AND INHERENT CONDITIONS EXISTENT IN THE CONSTRUCTION OF THE PARTICULAR FACILITIES WHICH MAY CREATE, DURING THE CONSTRUCTION PROGRAM, UNUSUAL OR UNSAFE CONDITIONS HAZARDOUS TO PERSONS, PROPERTY AND THE ENVIRONMENT. CONTRACTOR SHALL BE AWARE OF SUCH PECULIAR RISKS AND HAVE THE SKILL AND EXPERIENCE TO FORESEE AND TO ADOPT PROTECTIVE MEASURES TO ADEQUATELY AND SAFELY PERFORM THE CONSTRUCTION WORK WITH RESPECT TO SUCH HAZARDS.
28. CONTRACTOR SHALL BE RESPONSIBLE FOR THE REMOVAL OF ALL STRIPING AND/OR PAVEMENT MARKINGS NECESSARY TO TIE EXISTING STRIPING INTO FUTURE STRIPING. METHOD OF REMOVAL SHALL BE BY GRINDING OR SANDBLASTING.
29. CONTRACTOR SHALL PROVIDE ALL SHORING, BRACING, SLOPING OR OTHER PROVISIONS NECESSARY TO PROTECT WORKMEN FOR ALL AREAS TO BE EXCAVATED TO A DEPTH OF 4' OR MORE. FOR EXCAVATIONS 4 FEET OR MORE IN DEPTH, THE CONTRACTOR SHALL COMPLY WITH INDUSTRIAL COMMISSION OF UTAH SAFETY ORDERS SECTION 68 – EXCAVATIONS, AND SECTION 69 – TRENCHES, ALONG WITH ANY LOCAL CODES OR ORDINANCES.
30. ALL EXISTING GATES AND FENCES TO REMAIN UNLESS OTHERWISE NOTED ON PLANS. PROTECT ALL GATES AND FENCES FROM DAMAGE.

UTILITY NOTES

1. CONTRACTOR SHALL COORDINATE LOCATION OF NEW "DRY UTILITIES" WITH THE APPROPRIATE UTILITY COMPANY, INCLUDING BUT NOT LIMITED TO: TELEPHONE SERVICE, GAS SERVICE, CABLE, POWER, INTERNET.
2. EXISTING UTILITIES HAVE BEEN SHOWN ON THE PLANS USING A COMBINATION OF ON-SITE SURVEYS (BY OTHERS). PRIOR TO COMMENCING ANY WORK, IT SHALL BE THE CONTRACTOR'S RESPONSIBILITY TO HAVE EACH UTILITY COMPANY LOCATE, IN THE FIELD, THEIR MAIN AND SERVICE LINES. THE CONTRACTOR SHALL NOTIFY BLUE STAKES AT 1-800-662-4111 48 HOURS IN ADVANCE OF PERFORMING ANY EXCAVATION WORK. THE CONTRACTOR SHALL RECORD THE BLUE STAKES ORDER NUMBER AND FURNISH ORDER NUMBER TO OWNER AND ENGINEER PRIOR TO ANY EXCAVATION. IT WILL BE THE CONTRACTOR'S SOLE RESPONSIBILITY TO DIRECTLY CONTACT ANY OTHER UTILITY COMPANIES THAT ARE NOT MEMBERS OF BLUE STAKES. IT SHALL BE THE CONTRACTOR'S SOLE RESPONSIBILITY TO PROTECT ALL EXISTING UTILITIES SO THAT NO DAMAGE RESULTS TO THEM DURING THE PERFORMANCE OF THIS CONTRACT. ANY REPAIRS NECESSARY TO DAMAGED UTILITIES SHALL BE PAID FOR BY THE CONTRACTOR. THE CONTRACTOR SHALL BE REQUIRED TO COOPERATE WITH OTHER CONTRACTORS AND UTILITY COMPANIES INSTALLING NEW STRUCTURES, UTILITIES AND SERVICE TO THE PROJECT.
3. CONTRACTOR SHALL POT HOLE ALL UTILITIES TO DETERMINE IF CONFLICTS EXIST PRIOR TO BEGINNING ANY EXCAVATION. NOTIFY ENGINEER OF ANY CONFLICTS. CONTRACTOR SHALL VERIFY LOCATION AND INVERTS OF EXISTING UTILITIES TO WHICH NEW UTILITIES WILL BE CONNECTED. PRIOR TO COMMENCING ANY EXCAVATION WORK THE CONTRACTOR SHALL NOTIFY ALL UTILITY COMPANIES IN ACCORDANCE WITH THE REQUIRED PROCEDURES.
4. CARE SHOULD BE TAKEN IN ALL EXCAVATIONS DUE TO POSSIBLE EXISTENCE OF UNRECORDED UTILITY LINES. EXCAVATION REQUIRED WITHIN PROXIMITY OF EXISTING UTILITY LINES SHALL BE DONE BY HAND. CONTRACTOR SHALL REPAIR ANY DAMAGE TO EXISTING UTILITY LINES OR STRUCTURES INCURRED DURING CONSTRUCTION OPERATIONS AT HIS EXPENSE.
5. ALL VALVES AND MANHOLE COVERS SHALL BE RAISED OR LOWERED TO MEET FINISHED GRADE.
6. CONTRACTOR SHALL CUT PIPES OFF FLUSH WITH THE INSIDE WALL OF THE BOX OR MANHOLE.
7. CONTRACTOR SHALL GROUT AT CONNECTION OF PIPE TO BOX WITH NON-SHRINKING GROUT, INCLUDING PIPE VOIDS LEFT BY CUTTING PROCESS, TO A SMOOTH FINISH.
8. CONTRACTOR SHALL GROUT WITH NON-SHRINK GROUT BETWEEN GRADE RINGS AND BETWEEN BOTTOM OF INLET LID FRAME AND TOP OF CONCRETE BOX.
9. SILT AND DEBRIS IS TO BE CLEANED OUT OF ALL STORM DRAIN BOXES. CATCH BASINS ARE TO BE MAINTAINED IN A CLEANED CONDITION AS NEEDED UNTIL AFTER THE FINAL BOND RELEASE INSPECTION.
10. CONTRACTOR SHALL CLEAN ASPHALT, TAR OR OTHER ADHESIVES OFF OF ALL MANHOLE LIDS AND INLET GRATES TO ALLOW ACCESS.
11. EACH TRENCH SHALL BE EXCAVATED SO THAT THE PIPE CAN BE LAID TO THE ALIGNMENT AND GRADE AS REQUIRED. THE TRENCH WALL SHALL BE SO BRACED THAT THE WORKMEN MAY WORK SAFELY AND EFFICIENTLY. ALL TRENCHES SHALL BE DRAINED SO THE PIPE LAYING MAY TAKE PLACE IN DEWATERED CONDITIONS. THE CONTRACTOR IS SOLELY RESPONSIBLE FOR THE COST OF DEWATERING AND NO COST CHANGE WILL BE PROVIDED.
12. CONTRACTOR SHALL PROVIDE AND MAINTAIN AT ALL TIMES AMPLE MEANS AND DEVICES WITH WHICH TO REMOVE PROMPTLY AND TO PROPERLY DISPOSE OF ALL WATER ENTERING THE TRENCH EXCAVATION.
13. MAINTAIN A MINIMUM 18" VERTICAL SEPARATION DISTANCE BETWEEN ALL UTILITY CROSSINGS.
14. CONTRACTOR SHALL START INSTALLATION AT LOW POINT OF ALL NEW GRAVITY UTILITY LINES.
15. ALL BOLTED FITTINGS MUST BE GREASED AND WRAPPED.
16. UNLESS SPECIFICALLY NOTED OTHERWISE, MAINTAIN AT LEAST 2 FEET OF COVER OVER ALL STORM DRAIN LINES AT ALL TIMES (INCLUDING DURING CONSTRUCTION).
17. ALL WATER LINES SHALL BE INSTALLED A MINIMUM OF 60" OF COVER TO TOP OF PIPE BELOW FINISHED GRADE.
18. ALL SEWER LINES AND SEWER SERVICES SHALL HAVE A MINIMUM SEPARATION OF 10 FEET, PIPE EDGE TO PIPE EDGE, FROM THE WATER LINES.
19. CONTRACTOR SHALL INSTALL THRUST BLOCKING AT ALL WATERLINE ANGLE POINTS AND TEES.
20. ALL UNDERGROUND UTILITIES SHALL BE IN PLACE PRIOR TO INSTALLATION OF CURB, GUTTER, SIDEWALK AND STREET PAVING.
21. CONTRACTOR SHALL INSTALL MAGNETIC LOCATING TAPE CONTINUOUSLY OVER ALL NONMETALLIC PIPE
22. THE CONTRACTOR SHALL NOTIFY NOLTE ASSOCIATES, INC. IN WRITING AT LEAST 48 HOURS PRIOR TO BACKFILLING OF ANY PIPE WHICH STUBS TO A FUTURE PHASE OF CONSTRUCTION FOR INVERT VERIFICATION. TOLERANCE SHALL BE IN ACCORDANCE WITH THE REGULATORY AGENCY STANDARD SPECIFICATIONS.
23. UNDER NO CIRCUMSTANCE SHALL THE PIPE OR ACCESSORIES BE DROPPED INTO THE TRENCH

EROSION CONTROL GENERAL NOTES:

THE CONTRACTOR TO USE BEST MANAGEMENT PRACTICES FOR PROVIDING EROSION CONTROL FOR CONSTRUCTION OF THIS PROJECT. ALL MATERIAL AND WORKMANSHIP SHALL CONFORM TO WEBER COUNTY ORDINANCES AND ALL WORK SHALL BE SUBJECT TO INSPECTION BY THE COUNTIES. ALSO, INSPECTORS WILL HAVE THE RIGHT TO CHANGE THE FACILITIES AS NEEDED.

CONTRACTOR SHALL KEEP THE SITE WATERED TO CONTROL DUST. CONTRACTOR TO LOCATE A NEARBY HYDRANT FOR USE AND TO INSTALL TEMPORARY METER. CONSTRUCTION WATER COST TO BE INCLUDED IN BID.

WHEN GRADING OPERATIONS ARE COMPLETED AND THE DISTURBED GROUND IS LEFT "OPEN" FOR 14 DAYS OR MORE, THE AREA SHALL BE FURROWED PARALLEL TO THE CONTOURS.

THE CONTRACTOR SHALL MODIFY EROSION CONTROL MEASURES TO ACCOMMODATE PROJECT PLANNING.

ALL ACCESS TO PROPERTY WILL BE FROM PUBLIC RIGHT-OF-WAYS.

LEGEND:

SYMBOL / LINETYPE	DESCRIPTION	DETAIL
18"W	18"ø HDPE DR-13.5 WATER PIPE (UNLESS NOTED OTHERWISE)	APWA PLAN NO. 381,382
16"W	16"ø HDPE DR-13.5 WATER PIPE (UNLESS NOTED OTHERWISE)	APWA PLAN NO. 381,382
14"W	14"ø HDPE DR-13.5 WATER PIPE (UNLESS NOTED OTHERWISE)	APWA PLAN NO. 381,382
12"W	12"ø HDPE DR-13.5 WATER PIPE (UNLESS NOTED OTHERWISE)	APWA PLAN NO. 381,382
10"W	10"ø HDPE DR-13.5 WATER PIPE (UNLESS NOTED OTHERWISE)	APWA PLAN NO. 381,382
8"W	8"ø HDPE DR-13.5 WATER PIPE (UNLESS NOTED OTHERWISE)	APWA PLAN NO. 381,382
6"W	6"ø HDPE DR-13.5 WATER PIPE (UNLESS NOTED OTHERWISE)	APWA PLAN NO. 381,382
18"SD	18"ø CLIII RCP DRAINAGE PIPE	APWA PLAN NO. 381,382
15"SD	15"ø CLIII RCP DRAINAGE PIPE	APWA PLAN NO. 381,382
—	DRAINAGE SWALE	N/A
8"SS	8"ø SDR-35 PVC SEWER PIPE	APWA PLAN NO. 381,382
8"SS HDPE	8"ø DR-17 HDPE SEWER PIPE	APWA PLAN NO. 381,382
(1)SS-P	PRESSURE SEWER PIPE	APWA PLAN NO. 381,382
(2)SS-P	(2) JOINT TRENCHED PRESSURE SEWER PIPES	APWA PLAN NO. 381,382
(3)SS-P	(3) JOINT TRENCHED PRESSURE-SEWER PIPES	APWA PLAN NO. 381,382
(4)SS-P	(4) JOINT TRENCHED PRESSURE-SEWER PIPES	APWA PLAN NO. 381,382
	PROPOSED FIRE HYDRANT ASSEMBLY	APWA PLAN NO. 511
S	SEWER MANHOLE	APWA PLAN NO. 411
D	STORM DRAIN MANHOLE	APWA PLAN NO. 341
	CURB INLET BOX	APWA PLAN NO. 315
	PROPOSED PAVEMENT SECTION	PER IGES GEOTECH REPORT 11/09/12
	ADJOINING PROPERTY BOUNDARY	N/A
	WEBER/CACHE COUNTY LINE	N/A
	PROPOSED LOT LINE	N/A
	PROPOSED ROAD RIGHT OF WAY	N/A
	PROPOSED ROAD CENTERLINE	N/A
	TYPE F PROPOSED CURB AND GUTTER	APWA STANDARD PLAN 205
	PROPOSED GUARDRAIL	UDOT BA 4D1
	PROPOSED END TREATMENT TYPE G	UDOT CC 1
	SURVEY MONUMENT MARKER	PER WEBER COUNTY SPECS. SEE SHEET 5.20
6"W	EXISTING 6" WATER PIPE	N/A
SS	EXISTING SEWER PIPE	N/A
4"W	EXISTING 4" WATER PIPE	N/A
S	EXISTING SEWER MANHOLE	N/A

NOTE: LEGEND MAY CONTAIN SYMBOLS THAT ARE NOT USED IN PLAN SET.

EROSION CONTROL GENERAL NOTES CONT.:

THE CONTRACTOR IS REQUIRED BY STATE AND FEDERAL REGULATIONS TO PREPARE A STORM WATER POLLUTION PREVENTION PLAN AND FILE A "NOTICE OF INTENT" WITH THE UTAH DIVISION OF WATER QUALITY.

MAINTENANCE:

ALL BEST MANAGEMENT PRACTICES (BMP'S) SHOWN ON THIS PLAN MUST BE MAINTAINED AT ALL TIMES UNTIL VEGETATION IS RE-ESTABLISHED.

THE CONTRACTOR'S RESPONSIBILITY SHALL INCLUDE MAKING BI-WEEKLY CHECKS ON ALL EROSION CONTROL MEASURES TO DETERMINE IF REPAIR OR SEDIMENT REMOVAL IS NECESSARY. CHECKS SHALL BE DOCUMENTED AND COPIES OF THE INSPECTIONS KEPT ON SITE.

SEDIMENT DEPOSITS SHOULD BE REMOVED AFTER EACH RAINFALL. THEY MUST BE REMOVED WHEN THE LEVEL OF DEPOSITION REACHES APPROXIMATELY ONE-HALF THE HEIGHT OF BARRIER.

SEDIMENT TRACKED ONTO PAVED ROADS MUST BE CLEANED UP AS SOON AS PRACTICAL, BUT IN NO CASE LATER THAN THE END OF THE NORMAL WORK DAY. THE CLEAN UP WILL INCLUDE SWEEPING OF THE TRACKED MATERIAL, PICKING IT UP, AND DEPOSITING IT TO A CONTAINED AREA.

EXPOSED SLOPES:

ANY EXPOSED SLOPE THAT WILL REMAIN UNTOUCHED FOR LONGER THAN 14 DAYS MUST BE STABILIZED BY ONE OR MORE OF THE FOLLOWING METHODS:

A) SPRAYING DISTURBED AREAS WITH A TACKIFIER VIA HYDROSEED
B) TRACKING STRAW PERPENDICULAR TO SLOPES
C) INSTALLING A LIGHT-WEIGHT, TEMPORARY EROSION CONTROL BLANKET

SCOPE OF WORK:

PROVIDE, INSTALL AND/OR CONSTRUCT THE FOLLOWING PER THE SPECIFICATIONS GIVEN OR REFERENCED, THE DETAILS NOTED, AND/OR AS SHOWN ON THE CONSTRUCTION DRAWINGS:

HATCHING INDICATES AREAS TO RECEIVE 4" TOPSOIL AND TO BE SEEDED FOR NATURAL VEGETATION*. AREAS RECEIVING SEEDING FOR NATURAL REVEGETATION MUST BE COVERED WITH AN EROSION CONTROL BLANKET AFTER THE FINAL GRADING AND SEEDING ARE FINISHED. INSTALL NORTH AMERICAN GREEN SC-150 BLANKET OR APPROVED EQUAL. FOLLOW MANUFACTURER'S SPECIFICATIONS. INSTALL NORTH AMERICAN GREEN P300 EROSION CONTROL BLANKET ON ALL SLOPES GREATER THAN 1.5:1.

INSTALL 15' X 50' VEHICLE WASH DOWN AREA WITH 1"-2.5" COARSE AGGREGATE PLACED A MINIMUM 8" THICK. SUPPLY WATER FOR VEHICLE WASH DOWN.

STABILIZED CONSTRUCTION ENTRANCE FOR SITE INGRESS/EGRESS. IF ALTERNATE ACCESS POINTS ARE APPROVED BY OWNER, ADDITIONAL STABILIZED CONSTRUCTION ENTRANCES WILL BE REQUIRED.

INSTALL INLET PROTECTION IN FORM OF CONCRETE BLOCKS / FILTER CLOTH / GRAVEL OR SILT SACK AT EXISTING AND PROPOSED CATCH BASINS AS SHOWN ON PLAN.

INSTALL SILT FENCE ALONG DOWN GRADIENT LIMITS OF DISTURBANCE AS SHOWN ON PLAN.

INSTALL ORANGE SAFETY FENCING AROUND OUTER LIMITS OF PROJECT PRIOR TO GRADING.

* SEED MIXTURE FOR REVEGITATION

a. MEADOW BROME (RIGOR)	14lb/ac
b. ORCHARD GRASS	10lb/ac
c. ALFALFA (ADAK)	4lb/ac

KEYNOTE CALLOUTS

1. CONNECT TO EXSISTING WATER STUB WITH HDPE ELECTRO FUSION COUPLING
2. 10" 22.5° DI BEND PER APWA PLAN NO. 561,562
3. 10" 45° DI BEND PER APWA PLAN NO 561,562
4. 8" 90° DI BEND PER APWA PLAN NO. 561,562
5. 10" MJxFL GATE VALVE PER APWA PLAN NO. 561,562
6. 10"x8" TEE PER APWA PLAN NO. 561,562
7. 8" MJxFL GATE VALVE PER APWA PLAN NO. 561,562
8. 8" 45° DI BEND PER APWA PLAN NO. 561,562
9. WATER SERVICE LATERAL PER APWA STANDARD DRAWING 521 AND SPECIFICATIONS (TYP.)
10. SEWER SERVICE LATERAL PER DETAIL B/5.10 (TYP.)
11. CONNECT TO EXISTING SEWER STUB WITH PVC PIPE COUPLING SLEEVE
12. ADJUST INLETS TO GRADE
13. INSTALL RD NAME SIGN PER MUTCD
14. 12" STOP BAR PER MUTCD
15. STOP SIGN "R1-1"
16. DEMO HATCHED SECTION OF EXISTING CURB & GUTTER
17. CONNECT TO EXISTING STORM DRAIN STUB

CALL BEFORE YOU DIG! IT'S THE LAW BLUE STAKES 1 800 662 4111

NO.	BY	DATE	REVISIONS

CAUTION
The engineer preparing these plans will not be responsible for, or liable for, unauthorized changes to or uses of these plans. All changes to the plans must be in writing and must be approved by the preparer of these plans.

PHASE 1C CONSTRUCTION
GENERAL NOTES, LEGEND, AND KEYNOTES

PREPARED FOR: SUMMIT, LLC
DATE SUBMITTED: 9/24/2013

NV5 BEYOND ENGINEERING
5217 SOUTH STATE STREET, SUITE 200
801.743.5900 TEL 801.743.5930 FAX
MURRAY, UT 84107
WWW.NV5.COM

REGISTERED PROFESSIONAL ENGINEER No. 7899506 RYAN W. CATHEY 9/24/13 STATE OF UTAH

SHEET NUMBER
1.01

SCALE
VERTICAL: 1"= N/A
HORIZONTAL: 1"= N/A

JOB NUMBER
SLB079306

BOWLDEN
XREFS:

DATE: 9/24/13 TIME: 5:09:23 AM DRAWING NAME: IP1C2UTIL.DWG
SERVER: NONE PAGE SETUP: PDF-C30-24x36 LAYOUT: Layout1
PATH: N:\SLB0793\CADD\PHASE 1\IP\P1-C DESIGNER: #### PROJ. MGR: ####

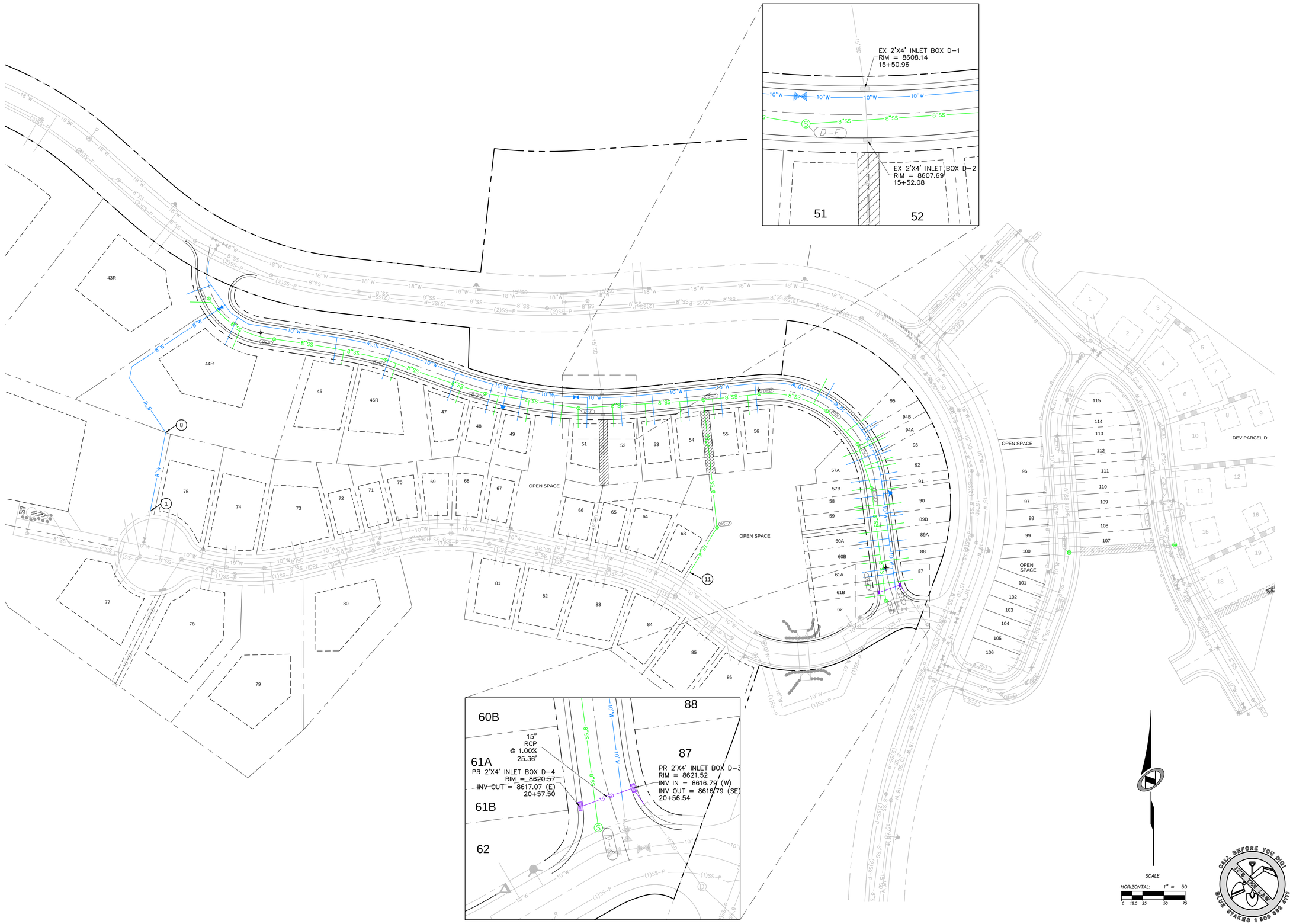

NO.	BY	DATE	REVISIONS

CAUTION

The engineer preparing these plans will not be responsible for, or liable for, unauthorized changes to or uses of these plans. All changes to the plans must be in writing and must be approved by the preparer of these plans.

PHASE 1C CONSTRUCTION
OVERALL UTILITY PLAN

DATE SUBMITTED: 9/24/2013

PREPARED FOR: SUMMIT, LLC

N|V5
BEYOND ENGINEERING
5217 SOUTH STATE STREET, SUITE 200
801.743.5900 TEL 801.743.5900 FAX
MURRAY, UT 84107
WWW.NV5.COM

REGISTERED PROFESSIONAL ENGINEER
No. 7899506
RYAN W. CATHEY
9/24/13
STATE OF UTAH

SHEET NUMBER
1.02

SCALE
VERTICAL: 1"= NA
HORIZONTAL: 1"= 40

JOB NUMBER
SLB079306

BOWLDEN
XREFS:

DATE: 9/24/13 TIME: 5:54:04 AM DRAWING NAME: IP10SDR.DWG
SERVER: NONE PAGE SETUP: PDF-C30-24x36 LAYOUT: Layout1
PATH: N:\SLB0793\CADD\PHASE 1\IP\P1-C DESIGNER: #### PROJ. MGR: ####

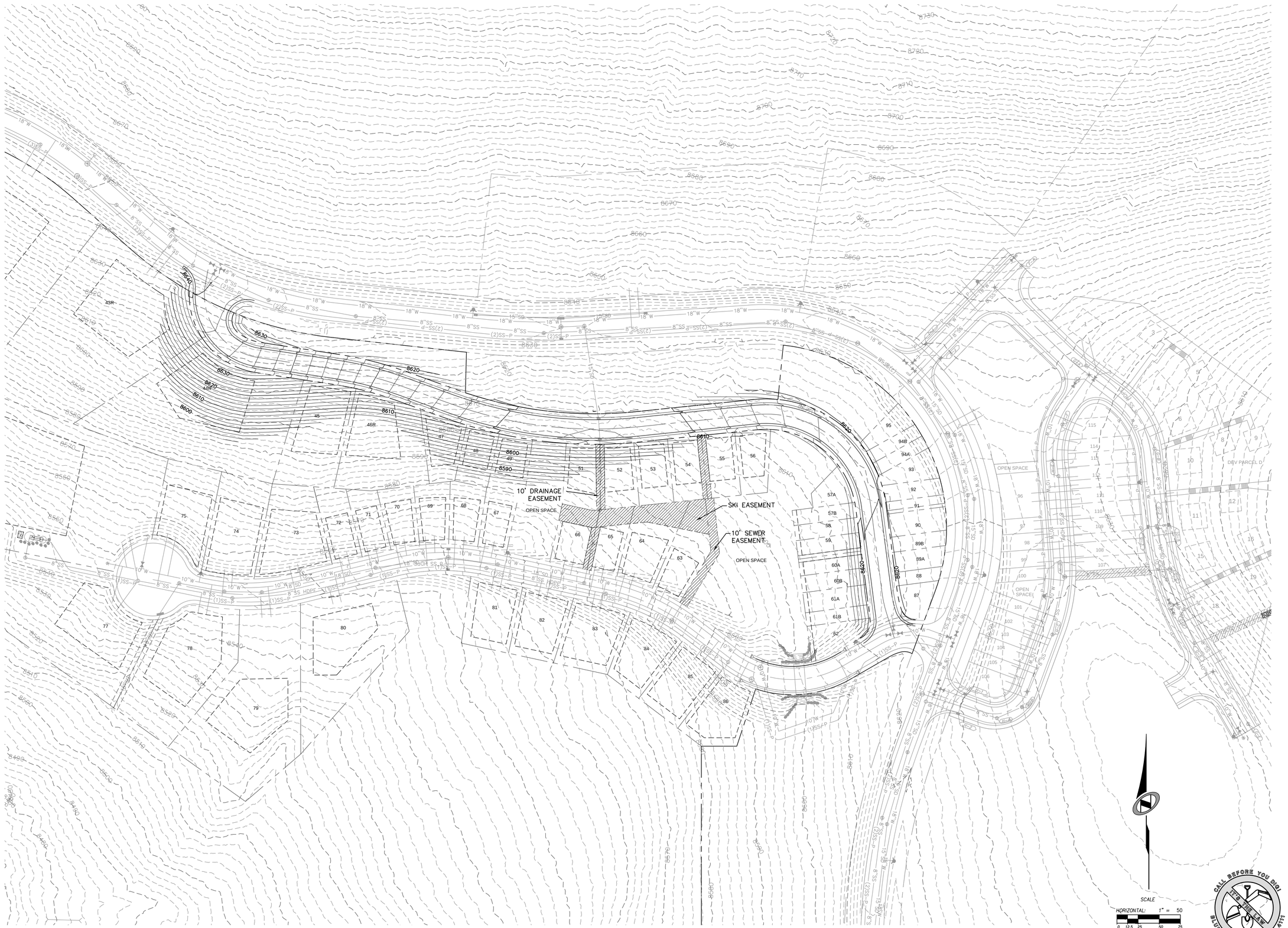

NO.	BY	DATE	REVISIONS

CAUTION

The engineer preparing these plans will not be responsible for, or liable for, unauthorized changes to or uses of these plans. All changes to the plans must be in writing and must be approved by the preparer of these plans.

PHASE 1C CONSTRUCTION

OVERALL GRADING PLAN

PREPARED FOR: SUMMIT, LLC

DATE SUBMITTED: 9/24/2013

NV5 BEYOND ENGINEERING
6217 SOUTH STATE STREET, SUITE 200
801.743.1300 TEL 801.743.0300 FAX
MURRAY, UT 84107
WWW.NV5.COM

REGISTERED PROFESSIONAL ENGINEER
No. 7899506
RYAN W. CATHEY
9/24/13
STATE OF UTAH

SHEET NUMBER
1.03

SCALE
VERTICAL: 1"= NA
HORIZONTAL: 1"= 40

JOB NUMBER
SLB079306

CALL BEFORE YOU DIG!
IT'S THE LAW
BLUE STAKES 1 800 662 4111

BOWLDEN
KEEFS:

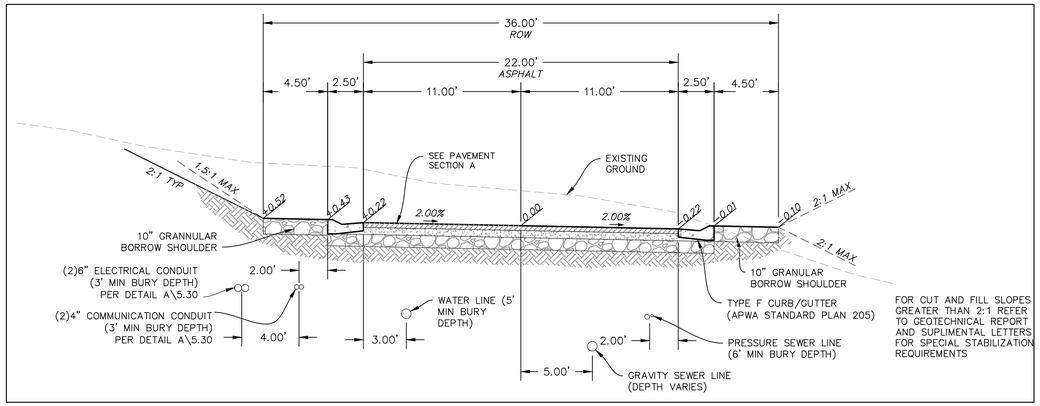

TYPICAL ROADWAY SECTION A–A

(36' RIGHT OF WAY SECTION)
STA: 10+00.00 TO 20+88.66

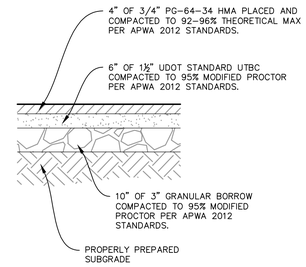

PAVEMENT SECTION A

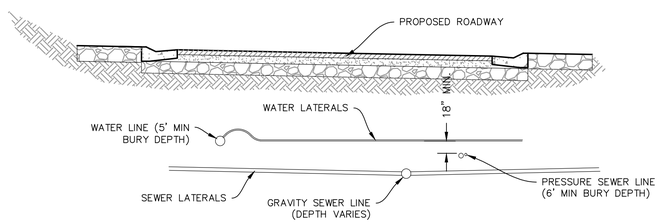

WATER AND SEWER SEPARATION DETAIL

CALL BEFORE YOU DIG! IT'S THE LAW BLUE STAKES 1 800 662 4111

NO.	BY	DATE	REVISIONS

CAUTION

The engineer preparing these plans will not be responsible for, or liable for, unauthorized changes to or uses of these plans. All changes to the plans must be in writing and must be approved by the preparer of these plans.

PHASE 1C CONSTRUCTION

ROADWAY TYPICAL SECTIONS

PREPARED FOR: SUMMIT, LLC

DATE SUBMITTED: 9/24/2013

NV5
BEYOND ENGINEERING
6217 SOUTH STATE STREET, SUITE 200
801.743.1900 TEL 801.743.0300 FAX
MURRAY, UT 84107
WWW.NV5.COM

REGISTERED PROFESSIONAL ENGINEER No. 7899506 RYAN W. CATHEY STATE OF UTAH

SHEET NUMBER
1.04

SCALE
VERTICAL: 1"= N/A
HORIZONTAL: 1"= N/A

JOB NUMBER
SLB079306

DATE: 9/24/13 TIME: 5:19:43 AM DRAWING NAME: IP1C4D1.DWG
SERVER: NONE PAGE SETUP: PDF-C30-24x36 LAYOUT: Layout1
PATH: N:\SLB0793\CADD\PHASE 1\IP\P1-C DESIGNER: #### PROJ. MGR: ####

BOWLDEN
KREPS:

DATE: 9/24/13 TIME: 8:51:13 AM DRAWING NAME: IP2COPP.DWG
SERVER: NONE PAGE SETUP: PDF-C30-24x36 LAYOUT: Layout1
PATH: N:\SLB079306\CADD\PHASE 1\IP\P1-C DESIGNER: TB PROJ. MGR: RE

KEY MAP

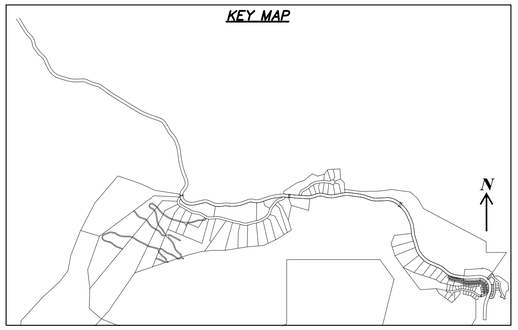

COPPER CREST ROAD

STA: 10+00.00 TO 28+88.66

SCALE
HORIZONTAL: 1" = 40'
0 10 20 40 60

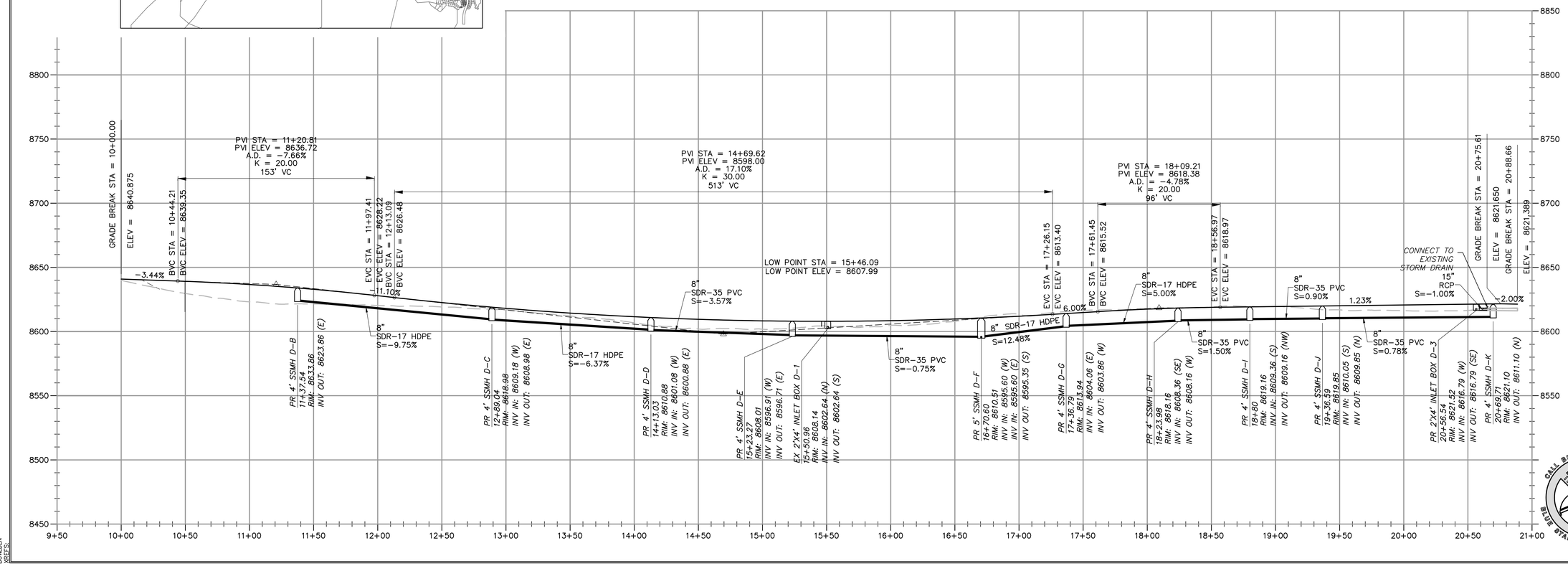

NO.	BY	DATE	REVISIONS

CAUTION
The engineer preparing these plans will not be responsible for, or liable for, unauthorized changes to or uses of these plans. All changes to the plans must be in writing and must be approved by the preparer of these plans.

PHASE 1C CONSTRUCTION

PLAN AND PROFILE
COPPER CREST ROAD

DATE SUBMITTED: 9/24/2013

PREPARED FOR: SUMMIT, LLC

NV5 BEYOND ENGINEERING
5217 SOUTH STATE STREET, SUITE 200
801.743.8300 TEL 801.743.8300 FAX
MURRAY, UT 84107
WWW.NV5.COM

REGISTERED PROFESSIONAL ENGINEER No. 7899506 RYAN W. CATHEY 9/24/13 STATE OF UTAH

CALL BEFORE YOU DIG! 1-800-662-4111 BLUE STAKES

SHEET NUMBER
2.00

SCALE
VERTICAL: 1" = 40'
HORIZONTAL: 1" = 40'

JOB NUMBER
SLB079306

BOWLDEN
XREFS:

DATE: 9/24/13 TIME: 5:24:45 AM DRAWING NAME: IP3000E.DWG
SERVER: NONE PAGE SETUP: PDF-C30-24x36 LAYOUT: Layout1
PATH: N:\SLB079306\CADD\PHASE 1\IP\P1-C DESIGNER: TB PROJ. MGR: RE

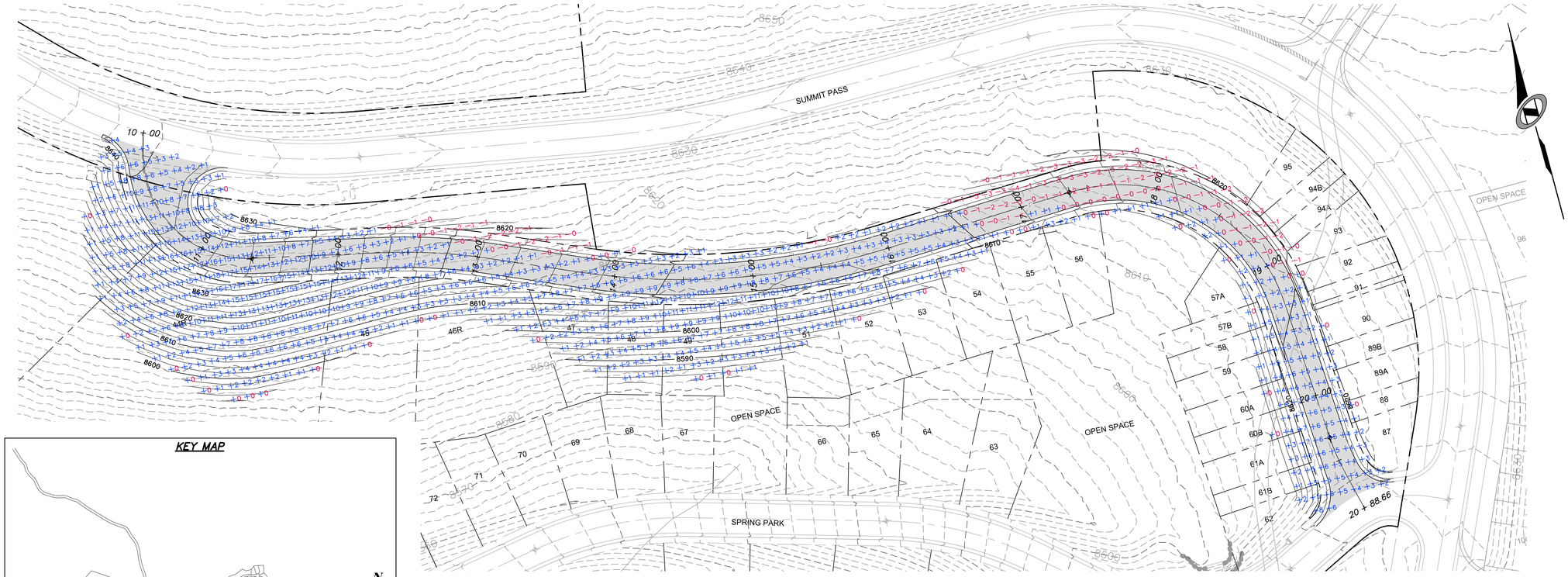

KEY MAP

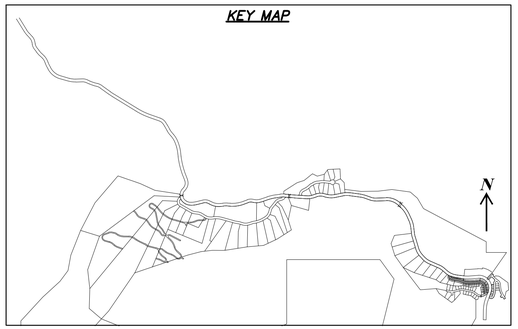

COPPER CREST ROAD

STA: 10+00.00 TO 28+88.66

SCALE
HORIZONTAL: 1" = 40'
0 10 20 40 60

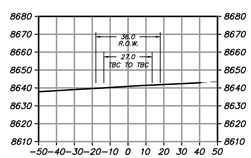

10+00
H: 1"=40'
V: 1"=40'

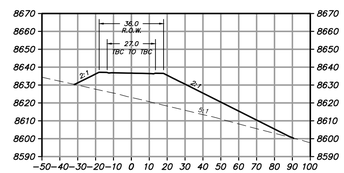

11+00
H: 1"=40'
V: 1"=40'

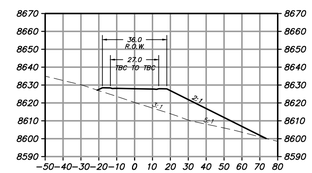

12+00
H: 1"=40'
V: 1"=40'

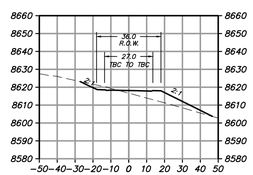

13+00
H: 1"=40'
V: 1"=40'

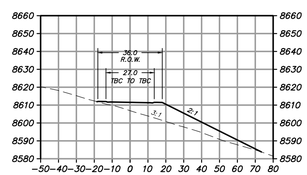

14+00
H: 1"=40'
V: 1"=40'

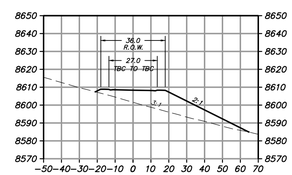

15+00
H: 1"=40'
V: 1"=40'

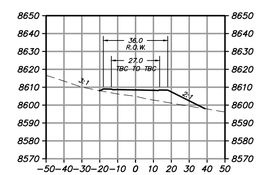

16+00
H: 1"=40'
V: 1"=40'

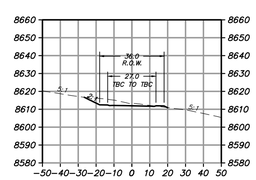

17+00
H: 1"=40'
V: 1"=40'

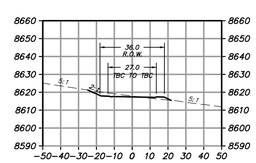

18+00
H: 1"=40'
V: 1"=40'

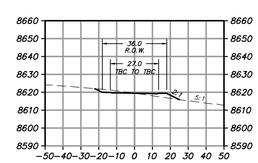

19+00
H: 1"=40'
V: 1"=40'

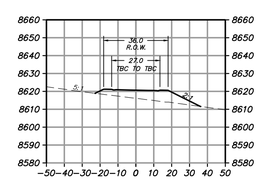

20+00
H: 1"=40'
V: 1"=40'

CALL BEFORE YOU DIG!
IT'S THE LAW
BLUE STAKES 1 800 662 4111

NO.	BY	DATE	REVISIONS

CAUTION

The engineer preparing these plans will not be responsible for, or liable for, unauthorized changes to or uses of these plans. All changes to the plans must be in writing and must be approved by the preparer of these plans.

PHASE 1C CONSTRUCTION

EARTHWORK AND SECTIONS
COPPER CREST ROAD

DATE SUBMITTED: 9/24/2013

PREPARED FOR: SUMMIT, LLC

N|V|5
BEYOND ENGINEERING
6217 SOUTH STATE STREET, SUITE 200
801.743.1900 TEL 801.743.0300 FAX
MURRAY, UT 84107
WWW.NV5.COM

REGISTERED PROFESSIONAL ENGINEER
No. 7899506
RYAN W. CATHEY
9/24/13
STATE OF UTAH

SHEET NUMBER
3.00

SCALE
VERTICAL: 1" = 40'
HORIZONTAL: 1" = 40'

JOB NUMBER
SLB079306

BOWLDEN
XREFS:

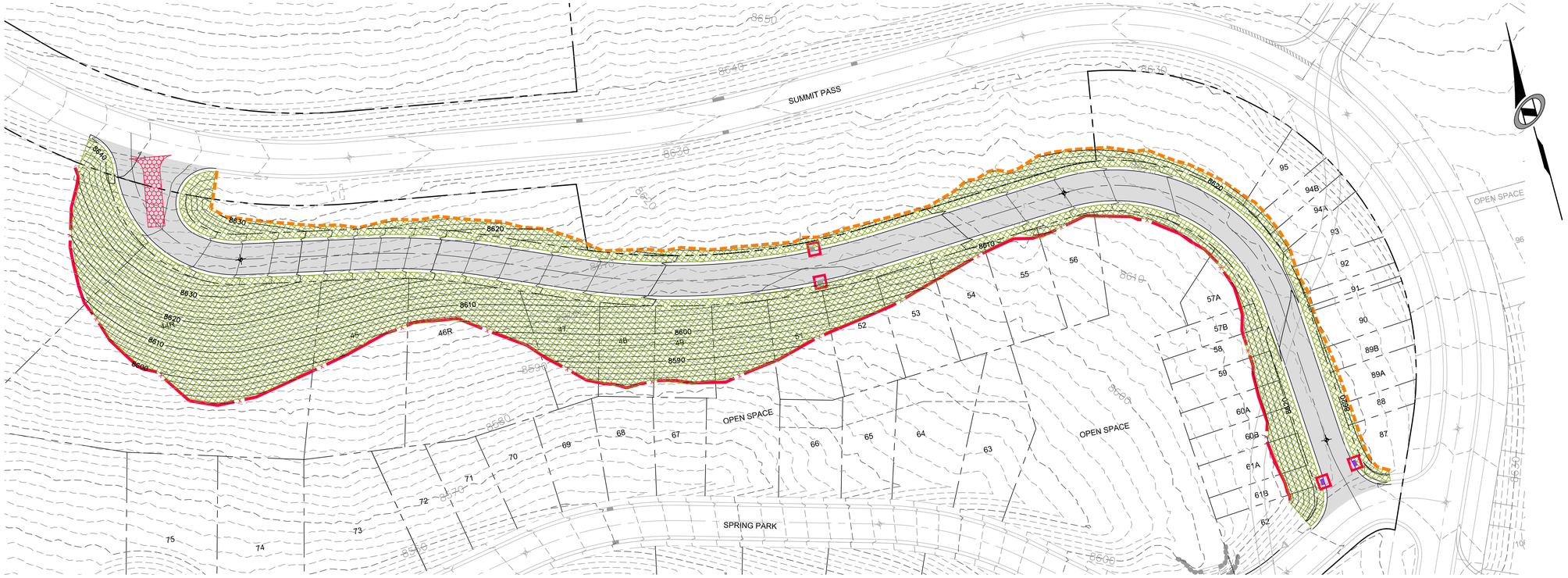

COPPER CREST ROAD

STA: 10+00.00 TO 28+88.66

SCALE

HORIZONTAL: 1" = 40

0 10 20 40 60

LEGEND

HATCHING INDICATES AREAS TO RECEIVE 4" TOPSOIL AND TO BE SEEDED FOR NATURAL VEGETATION*. AREAS RECEIVING SEEDING FOR NATURAL REVEGETATION MUST BE COVERED WITH AN EROSION CONTROL BLANKET AFTER THE FINAL GRADING AND SEEDING ARE FINISHED. INSTALL NORTH AMERICAN GREEN SC-150 BLANKET OR APPROVED EQUAL. FOLLOW MANUFACTURER'S SPECIFICATIONS. INSTALL NORTH AMERICAN GREEN P300 EROSION CONTROL BLANKET ON ALL SLOPES GREATER THAN 1.5:1.

INSTALL 15' X 50' VEHICLE WASH DOWN AREA WITH 1"-2.5" COARSE AGGREGATE PLACED A MINIMUM 8" THICK. SUPPLY WATER FOR VEHICLE WASH DOWN.

STABILIZED CONSTRUCTION ENTRANCE FOR SITE INGRESS/EGRESS. IF ALTERNATE ACCESS POINTS ARE APPROVED BY OWNER, ADDITIONAL STABILIZED CONSTRUCTION ENTRANCES WILL BE REQUIRED.

INSTALL INLET PROTECTION IN FORM OF CONCRETE BLOCKS / FILTER CLOTH / GRAVEL OR SILT SACK AT EXISTING AND PROPOSED CATCH BASINS AS SHOWN ON PLAN.

INSTALL SILT FENCE ALONG DOWN GRADIENT LIMITS OF DISTURBANCE AS SHOWN ON PLAN.

INSTALL ORANGE SAFETY FENCING AROUND OUTER LIMITS OF PROJECT PRIOR TO GRADING.

* SEED MIXTURE FOR REVEGITATION

a. MEADOW BROME (RIGOR)	14lb/ac
b. ORCHARD GRASS	10lb/ac
c. ALFALFA (ADAK)	4lb/ac

CALL BEFORE YOU DIG! IT'S THE LAW BLUE STAKES 1 800 662 4111

PHASE 1C CONSTRUCTION

EROSION CONTROL PLAN
COPPER CREST ROAD

DATE SUBMITTED: 9/24/2013

PREPARED FOR: SUMMIT, LLC

NO.	BY	DATE	REVISIONS

CAUTION

The engineer preparing these plans will not be responsible for, or liable for, unauthorized changes to or uses of these plans. All changes to the plans must be in writing and must be approved by the preparer of these plans.

NV5 BEYOND ENGINEERING
5217 SOUTH STATE STREET, SUITE 200
801.743.0300 TEL 801.743.0300 FAX
MURRAY, UT 84107
WWW.NV5.COM

REGISTERED PROFESSIONAL ENGINEER No. 7899506 RYAN W. CATHEY 9/24/13 STATE OF UTAH

SHEET NUMBER
4.00

SCALE
VERTICAL: 1"= 40'
HORIZONTAL: 1"= 40'

JOB NUMBER
SLB079306

DATE: 9/24/13 TIME: 5:25:54 AM DRAWING NAME: IP4DSEC.DWG
SERVER: NONE PAGE SETUP: PDF-C30-24x36 LAYOUT: Layout1
PATH: N:\SLB079306\CADD\PHASE 1\IP1-C DESIGNER: TB PROJ. MGR: RE

BOWLDEN
XREFS:

DATE: 9/24/13 TIME: 5:27:32 AM DRAWING NAME: IP500DT.DWG
SERVER: NONE PAGE SETUP: PDF-c30-24x36 LAYOUT: Layout1
PATH: N:\SL80793\CADD\PHASE 1\IP\P1-C DESIGNER: #### PROJ. MGR: ####

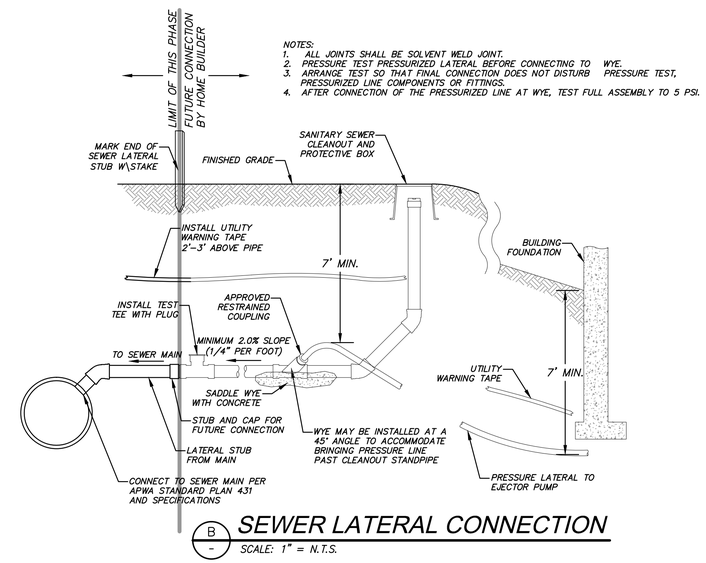

NOTES:
1. ALL JOINTS SHALL BE SOLVENT WELD JOINT.
2. PRESSURE TEST PRESSURIZED LATERAL BEFORE CONNECTING TO WYE.
3. ARRANGE TEST SO THAT FINAL CONNECTION DOES NOT DISTURB PRESSURE TEST, PRESSURIZED LINE COMPONENTS OR FITTINGS.
4. AFTER CONNECTION OF THE PRESSURIZED LINE AT WYE, TEST FULL ASSEMBLY TO 5 PSI.

B / - SEWER LATERAL CONNECTION

SCALE: 1" = N.T.S.

NO.	BY	DATE	REVISIONS

CAUTION

The engineer preparing these plans will not be responsible for, or liable for, unauthorized changes to or uses of these plans. All changes to the plans must be in writing and must be approved by the preparer of these plans.

PHASE 1C CONSTRUCTION

SEWER DETAILS

PREPARED FOR: SUMMIT, LLC

DATE SUBMITTED: 9/24/2013

NV5
BEYOND ENGINEERING
5217 SOUTH STATE STREET, SUITE 200
801.743.8300 TEL 801.743.8300 FAX
MURRAY, UT 84107
WWW.NV5.COM

REGISTERED PROFESSIONAL ENGINEER
No. 7899506
RYAN W. CATHEY
9/24/13
STATE OF UTAH

SHEET NUMBER
5.00

SCALE
VERTICAL: 1"= N/A
HORIZONTAL: 1"= N/A

JOB NUMBER
SLB079306

CALL BEFORE YOU DIG!
IT'S THE LAW
BLUE STAKES 1 800 662 4111

BOWLDEN
XREFS:

DATE: 9/24/13 TIME: 6:56:52 AM DRAWING NAME: IPS100TI.DWG
SERVER: NONE PAGE SETUP: PDF-C30-24x36 LAYOUT: Layout1
PATH: N:\SB079306\CADD\PHASE 1\IP\P1-C DESIGNER: #### PROJ. MGR: ####

△ 3^ FOR USE AT:

THREE PHASE TRANSFORMER PADVAULT

2.4–25 KV, RADIAL–FEED (1000–2500 KVA), GV151B, SI# 7992958

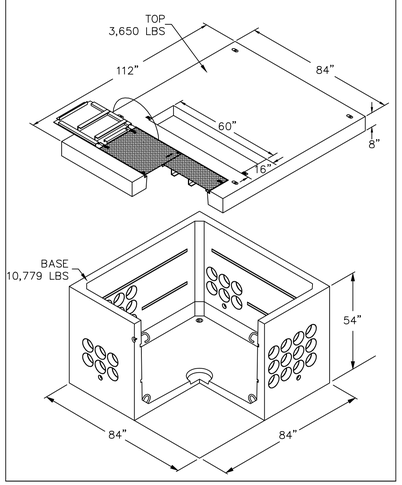

NOTE: LOCATIONS TO BE DETERMINED BY RMP IN FIELD

S FOR USE AT:

SWITCHGEAR, DEAD–FRONT PADVAULT

15KV, TYPE 9/11, GV402C, STOCK ITEM 7992788

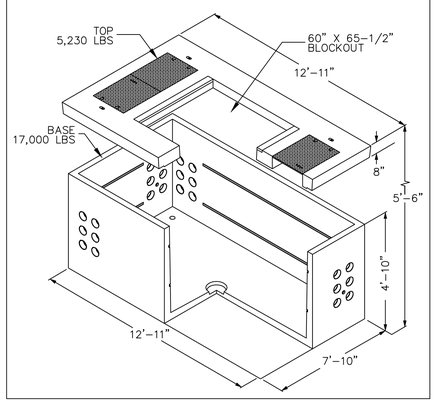

NOTE: LOCATIONS TO BE DETERMINED BY RMP IN FIELD

□ Ⓟ ⬡ FOR USE AT:

7' X 12' MANHOLE – FULL TRAFFIC VAULT

7' X 12', GV601A, SI# 7992596

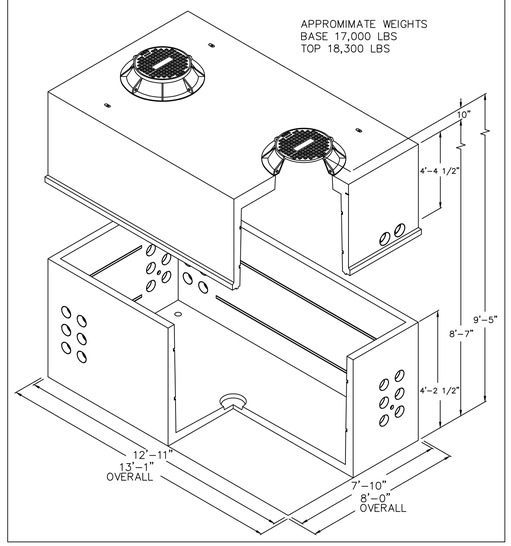

NOTE: LOCATIONS TO BE DETERMINED BY RMP IN FIELD

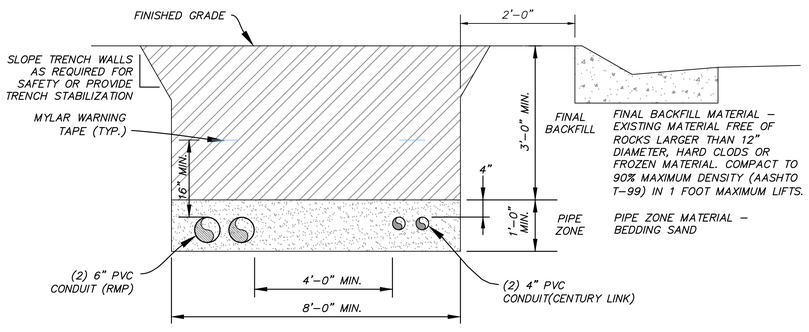

NOTE: EACH CONDUIT REQUIRES 2500lb MULE TAPE WITHIN

A / VAR **POWER CONDUIT TRENCH**

NTS

NO.	BY	DATE	REVISIONS

CAUTION

The engineer preparing these plans will not be responsible for, or liable for, unauthorized changes to or uses of these plans. All changes to the plans must be in writing and must be approved by the preparer of these plans.

PHASE 1C CONSTRUCTION

ELECTRICAL DETAILS

DATE SUBMITTED: 9/24/2013

PREPARED FOR: SUMMIT, LLC

NV5 BEYOND ENGINEERING

5217 SOUTH STATE STREET, SUITE 200
801.743.0300 TEL 801.743.0300 FAX
MURRAY, UT 84107
WWW.NV5.COM

REGISTERED PROFESSIONAL ENGINEER No. 7899506 RYAN W. CATHEY 9/24/13 STATE OF UTAH

CALL BEFORE YOU DIG! IT'S THE LAW BLUE STAKES 1 800 662 4111

SHEET NUMBER

5.10

SCALE

VERTICAL: 1"= N/A
HORIZONTAL: 1"= N/A

JOB NUMBER

SLB079306

BOWLDEN
XREFS:

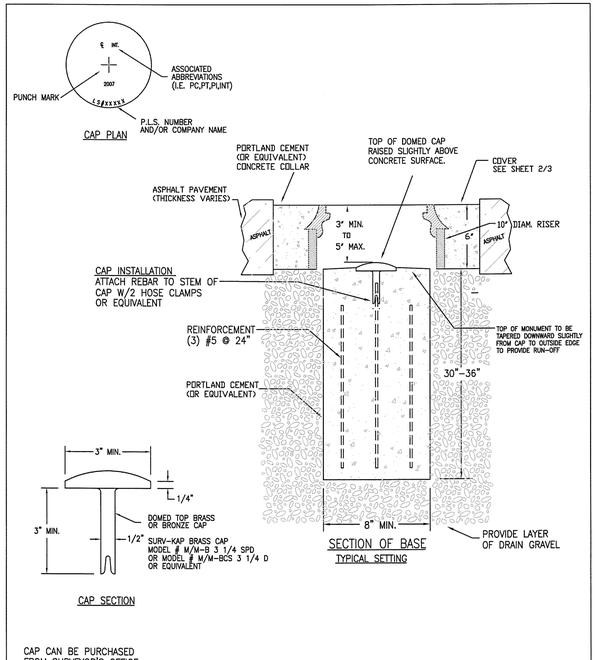

CAP CAN BE PURCHASED FROM SURVEYOR'S OFFICE

WEBER COUNTY SURVEY OFFICE	RING & LID SURVEY MONUMENT	STANDARD PLANS Monument Standard
3/26/10 399-8020		SHEET 1 OF 3

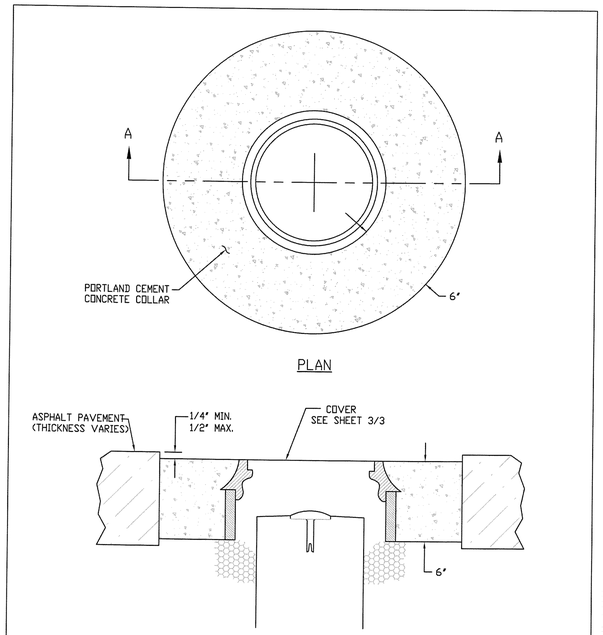

WEBER COUNTY SURVEY OFFICE	Cover Collar For Survey Monuments	STANDARD PLANS Monument Specifications
3/26/10 399-8020		SHEET 2 OF 3

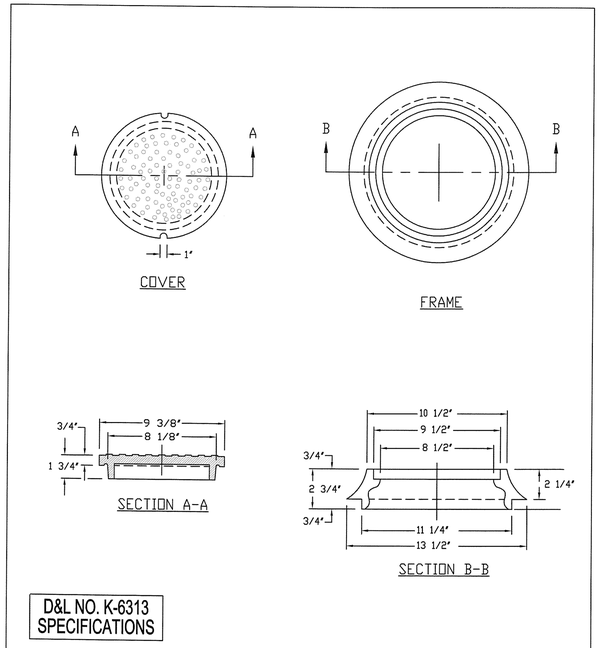

D&L NO. K-6313 SPECIFICATIONS

WEBER COUNTY SURVEY OFFICE	RING & LID SURVEY MONUMENT	STANDARD PLANS Monument Specifications
3/26/10 399-8020		SHEET 3 OF 3

CALL BEFORE YOU DIG! IT'S THE LAW! BLUE STAKES 1 800 662 4111

NO.	BY	DATE	REVISIONS

CAUTION

The engineer preparing these plans will not be responsible for, or liable for, unauthorized changes to or uses of these plans. All changes to the plans must be in writing and must be approved by the preparer of these plans.

PHASE 1C CONSTRUCTION

MISCELLANEOUS DETAILS

DATE SUBMITTED: 9/24/2013

PREPARED FOR: SUMMIT, LLC

NV5 BEYOND ENGINEERING
5217 SOUTH STATE STREET, SUITE 200
801.743.0300 TEL 801.743.0300 FAX
MURRAY, UT 84107
WWW.NV5.COM

REGISTERED PROFESSIONAL ENGINEER No. 7899506 RYAN W. CATHEY 9/24/13 STATE OF UTAH

SHEET NUMBER
5.20

SCALE
VERTICAL: 1"= N/A
HORIZONTAL: 1"= N/A

JOB NUMBER
SLB079306

DATE: 9/24/13 TIME: 5:28:42 AM DRAWING NAME: IPS200I.DWG
SERVER: NONE PAGE SETUP: PDF-C30-24x36 LAYOUT: Layout1
PATH: N:\SLB0793\CADD\PHASE 1\IP\P1-C DESIGNER: #### PROJ. MGR: ####
BOWLDEN
XREFS: