August 16, 2017

Issued for Construction Revision 2

MacKay-Lyons Sweetapple Architects Limited
2188 Gottingen Street
Halifax, Nova Scotia Canada B3K 3B4
ph: (902) 429-1867 fax: (902) 429-6276

Dynamic Structures
Structural Engineers
1887 N 1120 W
Provo, Utah, United States 84604
ph: (801) 356-1140

Salmon Electrical Contractors
Electrical Engineers
1778 West 1180 South
Woods Cross, Utah, United States 84087
ph: (801) 292-3444

Mountain Resort Builders LLC
Construction Management
3625 S. Honeycut Rd.
Salt Lake City, Utah, United States 84106
ph: (801) 699-4571 ph: (801) 259 9447

Mechanical Systems and Service Inc.
Mechanical Engineers
1055 South 700 West
Salt Lake City, Utah, United States 84104
ph: (801) 255-9333 fax: (801) 924-8583

Langvardt Design Group
Landscape
328 200 South
Salt Lake City, Utah, United States 84101
ph: (801) 583-1295

Talisman
Civil Engineers
5217 S State St #200
Murray, Utah, United States 84107
ph: (801) 743-1300

CIVIL

C1.00	Civil Title Sheet
C1.01	General Notes, Key Notes and Legend
C1.02	Overall Key Map
C2.00	Site and Utility Plan - West
C2.01	Site and Utility Plan - East
C2.02	Sanitary Sewer Plan and Profile
C3.00	Grading and Drainage Plan - West
C3.01	Grading and Drainage Plan - East
C4.00	Erosion Control Plan - Overall
C6.00	Details
C6.01	Booster Pump Details
C6.02	Booster Pump Details
C6.03	Sewer Ejector Details
C6.04	Details
C6.05	Details
C6.06	Guardrail Details

ARCHITECTURAL

A001	Abbreviations, Key Plan & Partition Types
A100	Site Plan
A101	Code Review, Fire Separation Plan & Height Restriction Chart
A102	Room Finish Schedules
A200	Floor Plans
A201	Reflected Ceiling Plans
A300	Exterior Elevations
A301	Exterior Elevations
A400	Building Sections
A401	Building Sections
A500	Plan Details
A510	Section Details
A511	Section Details
A520	Flashing and Membrane Details
A600	Millwork
A601	Millwork
A602	Millwork
A603	Millwork Details
A610	Stair
A700	Ramp Details
A900	Window/Door Schedule

STRUCTURAL

S0.1	General Note Sheet
S0.2	Special Inspection Sheet
S0.3	Special Inspection Sheet
S1.1	Foundation Plan
S1.2	Construction Details
S2.1	Main Floor Framing Plan
S2.2	Upper Floor and Roof Framing Plan
S3.1	Main Floor and Upper Floor Shear Wall Plans
S3.3	Construction Details
S4.1	Construction Details
S4.2	Construction Details
S5.1	Construction Details
S5.2	Construction Details
S6.1	Construction Details

MECHANICAL

MH001	Mechanical Legend and Notes
MH101	Mechanical Floor Plans
PP100	Plumbing Lower Plan - Below Floor
PP101	Plumbing Floor Plans - Waste and Vent
PP102	Plumbing Floor Plans - Domestic
PP501	Plumbing Details
PP601	Plumbing Schedules
PP901	Plumbing Waste and Vent Isometric

ELECTRICAL

E301	Electrical Plan - Cabin 1000 Main & Lower Level

PLAN REVIEW ACCEPTANCE

FOR COMPLIANCE WITH THE APPLICABLE CONSTRUCTION CODES IDENTIFIED BELOW.

☒ BUILDING	☒ STRUCTURAL
☒ MECHANICAL	☒ PLUMBING
☒ ELECTRICAL	☒ ENERGY
☐ ACCESSIBILITY	☐ FIRE

PLAN REVIEW ACCEPTANCE OF DOCUMENTS DOES NOT AUTHORIZE CONSTRUCTION TO PROCEED IN VIOLATION OF ANY FEDERAL, STATE, OR LOCAL REGULATIONS.

BY MEM DATE 08/24/17

WEST COAST CODE CONSULTANTS, INC.

Horizon Neighborhood Cabins

1000 SF Cabin

Summit Powder Mountain, Eden UT

HORIZON NEIGHBORHOOD PRUD
AT SUMMIT POWDER MOUNTAIN
CONSTRUCTION DRAWINGS

Located in Sec 08 T7N R2E
Weber County, Utah

SHEET INDEX:

SHEET NO.	SHEET DESCRIPTION
1.00	CIVIL TITLE SHEET
1.01	GENERAL NOTES, KEY NOTES, AND LEGEND
1.02	OVERALL KEY MAP
2.00	SITE AND UTILITY PLAN – WEST
2.01	SITE AND UTILITY PLAN – EAST
2.02	SANITARY SEWER PLAN AND PROFILE
3.00	GRADING AND DRAINAGE PLAN – WEST
3.01	GRADING AND DRAINAGE PLAN – EAST
4.00	EROSION CONTROL PLAN – OVERALL
6.00	DETAILS
6.01	BOOSTER PUMP DETAILS
6.02	BOOSTER PUMP DETAILS
6.03	SEWER EJECTOR DETAILS
6.04	DETAILS
6.05	DETAILS
6.05	GUARDRAIL DETAILS
	ELECTRICAL PLANS
E-01	LEGENDS, NOTES AND SCHEDULES
E-02	POWER ONE-LINE DIAGRAM
GE-01	ELECTRICAL DETAILS – 1

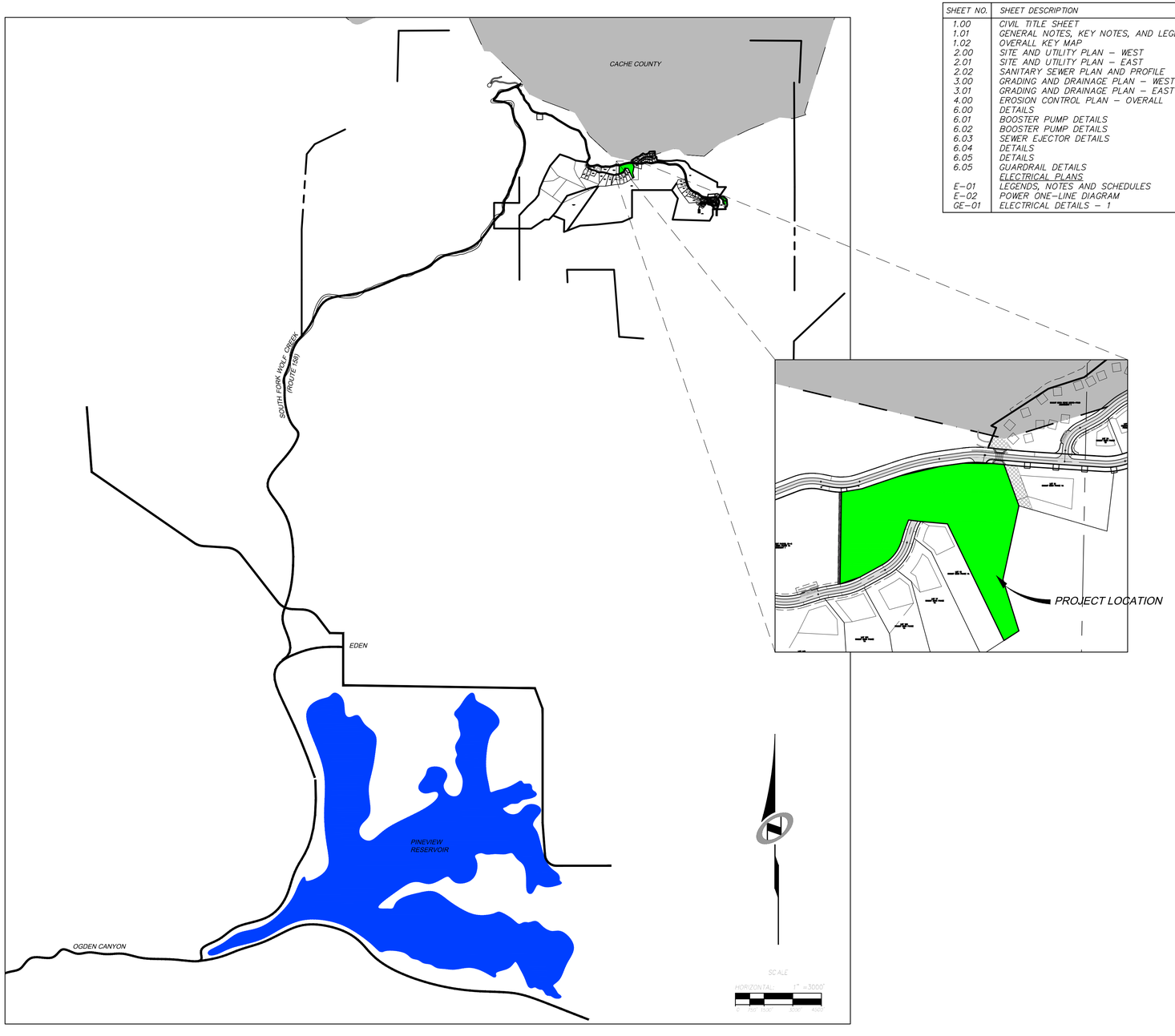

PLAN REVIEW ACCEPTANCE

FOR COMPLIANCE WITH THE APPLICABLE CONSTRUCTION CODES IDENTIFIED BELOW.

- [x] BUILDING
- [x] MECHANICAL
- [x] ELECTRICAL
- [ ] ACCESSIBILITY
- [x] STRUCTURAL
- [x] PLUMBING
- [x] ENERGY
- [ ] FIRE

PLAN REVIEW ACCEPTANCE OF DOCUMENTS DOES NOT AUTHORIZE CONSTRUCTION TO PROCEED IN VIOLATION OF ANY FEDERAL, STATE, OR LOCAL REGULATIONS.

BY: MEM DATE: 08/24/17

WEST COAST CODE CONSULTANTS, INC.

CALL BEFORE YOU DIG! IT'S THE LAW BLUE STAKES 1 800 662 4111

NO.	BY	DATE	REVISIONS:

CAUTION

The engineer preparing these plans will not be responsible for, or liable for, unauthorized changes to or uses of these plans. All changes to the plans must be in writing and must be approved by the preparer of these plans.

HORIZON NEIGHBORHOOD PRUD

CIVIL TITLE SHEET

PREPARED FOR: SUMMIT POWDER MOUNTAIN

DATE SUBMITTED: 08.03.2017

TALISMAN CIVIL CONSULTANTS

5217 SOUTH STATE STREET, SUITE 200
801.743.1300 TEL 801.743.0300 FAX
MURRAY, UT 84107

REGISTERED PROFESSIONAL ENGINEER No. 7899506 RYAN W. CATHEY 8/3/17 STATE OF UTAH

SHEET NUMBER
1.00

SCALE
VERTICAL: 1"= N/A
HORIZONTAL: 1"= 3000'

JOB NUMBER
SLB0793

DATE: 8/3/17 TIME: 12:55:51 PM DRAWING NAME: 100 – CIVIL TITLE SHEET.DWG
SERVER: NONE PAGE SETUP: PDF-C30-24x36 LAYOUT: Layout1
PATH: N:\SLB0793\CADD\HORIZON VILLAGE\IP DESIGNER: #### PROJ. MGR: ####

JOSHB
XREFS:

DATE: 8/15/17 TIME: 3:29:25 PM DRAWING NAME: GENERAL NOTES KEY NOTES AND LEGEND.D
SERVER: NONE PAGE SETUP: PDF-C3D-24x36 LAYOUT: Layout1
PATH: N:\SLB0793\CADD\HORIZON VILLAGE\IP DESIGNER: #### PROJ. MGR: ####

GENERAL NOTES

1. ALL CONSTRUCTION MUST STRICTLY FOLLOW THE STANDARDS AND SPECIFICATIONS SET FORTH BY: GOVERNING UTILITY MUNICIPALITY, GOVERNING CITY OR COUNTY (IF UN-INCORPORATED), INDIVIDUAL PRODUCT MANUFACTURERS, THE DESIGN ENGINEER, AND AMERICAN PUBLIC WORKS ASSOCIATION (APWA). THE ORDER LISTED ABOVE IS ARRANGED BY SENIORITY. IF A CONSTRUCTION PRACTICE IS NOT SPECIFIED BY ANY OF THE LISTED SOURCES, CONTRACTOR MUST CONTACT DESIGN ENGINEER FOR DIRECTION.
2. CONTRACTOR TO STRICTLY FOLLOW GEOTECHNICAL RECOMMENDATIONS FOR THIS PROJECT. ALL GRADING INCLUDING BUT NOT LIMITED TO CUT, FILL, COMPACTION, ASPHALT SECTION, SUBBASE, TRENCH EXCAVATION/BACKFILL, SITE GRUBBING, RETAINING WALLS AND FOOTINGS MUST BE COORDINATED DIRECTLY WITH THE PROJECT GEOTECHNICAL ENGINEER.
3. TRAFFIC CONTROL, STRIPING & SIGNAGE TO CONFORM TO CURRENT UDOT TRANSPORTATION ENGINEER'S MANUAL AND MANUAL OF UNIFORM TRAFFIC CONTROL DEVICES.
4. ANY AREA OUTSIDE THE LIMIT OF WORK THAT IS DISTURBED SHALL BE RESTORED TO ITS ORIGINAL CONDITION AT NO COST TO OWNER.
5. CONSULT ALL OF THE DRAWINGS AND SPECIFICATIONS FOR COORDINATION REQUIREMENTS BEFORE COMMENCING CONSTRUCTION.
6. AT ALL LOCATIONS WHERE EXISTING PAVEMENT ABUTS NEW CONSTRUCTION, THE EDGE OF THE EXISTING PAVEMENT SHALL BE SAWCUT TO A CLEAN, SMOOTH EDGE.
7. ALL CONSTRUCTION AND MATERIALS SHALL BE IN ACCORDANCE WITH THE MOST RECENT, ADOPTED EDITION OF ADA ACCESSIBILITY GUIDELINES.
8. PRIOR TO STARTING CONSTRUCTION, THE CONTRACTOR SHALL BE RESPONSIBLE FOR MAKING SURE THAT ALL REQUIRED PERMITS AND APPROVALS HAVE BEEN OBTAINED. NO CONSTRUCTION OR FABRICATION SHALL BEGIN UNTIL THE CONTRACTOR HAS RECEIVED THOROUGHLY REVIEWED PLANS AND OTHER DOCUMENTS APPROVED BY ALL OF THE PERMITTING AUTHORITIES.
9. CONTRACTOR IS RESPONSIBLE FOR SCHEDULING AND NOTIFYING ENGINEER OR INSPECTING AUTHORITY 48 HOURS IN ADVANCE OF COVERING UP ANY PHASE OF CONSTRUCTION REQUIRING OBSERVATION.
10. ANY WORK IN THE PUBLIC RIGHT-OF-WAY WILL REQUIRE PERMITS FROM THE APPROPRIATE, CITY, COUNTY OR STATE AGENCY CONTROLLING THE ROAD, INCLUDING OBTAINING REQUIRED INSPECTIONS.
11. ALL DIMENSIONS, GRADES & UTILITY DESIGNS SHOWN ON THE PLANS SHALL BE VERIFIED BY THE CONTRACTOR PRIOR TO CONSTRUCTION. CONTRACTOR SHALL NOTIFY ENGINEER OF ANY DISCREPANCIES PRIOR TO PROCEEDING WITH CONSTRUCTION FOR NECESSARY PLAN OR GRADE CHANGES.
12. CONTRACTOR MUST VERIFY ALL EXISTING CONDITIONS BEFORE BIDDING AND BRING UP ANY QUESTIONS BEFOREHAND.
13. SITE GRADING SHALL BE PERFORMED IN ACCORDANCE WITH THESE PLANS AND SPECIFICATIONS AND THE RECOMMENDATIONS SET FORTH BY THE GEOTECHNICAL ENGINEER.
14. CATCH SLOPES SHALL BE GRADED AS SPECIFIED ON GRADING PLANS.
15. CONTRACTOR SHALL BE RESPONSIBLE FOR ALL FLAGGING, CAUTION SIGNS, LIGHTS, BARRICADES, FLAGMEN, AND ALL OTHER DEVICES NECESSARY FOR PUBLIC SAFETY.
16. CONTRACTOR SHALL, AT THE TIME OF BIDDING AND THROUGHOUT THE PERIOD OF THE CONTRACT, BE LICENSED IN THE STATE OF UTAH AND SHALL BE BONDABLE FOR AN AMOUNT EQUAL TO OR GREATER THAN THE AMOUNT BID AND TO DO THE TYPE OF WORK CONTEMPLATED IN THE PLANS AND SPECIFICATIONS. CONTRACTOR SHALL BE SKILLED AND REGULARLY ENGAGED IN THE GENERAL CLASS AND TYPE OF WORK CALLED FOR IN THE PLANS AND SPECIFICATIONS.
17. CONTRACTOR SHALL INSPECT THE SITE OF THE WORK PRIOR TO BIDDING TO SATISFY HIMSELF BY PERSONAL EXAMINATION OR BY SUCH OTHER MEANS AS HE MAY PREFER OF THE LOCATION OF THE PROPOSED WORK AND OF THE ACTUAL CONDITIONS OF AND AT THE SITE OF WORK. IF, DURING THE COURSE OF HIS EXAMINATION, A BIDDER FINDS FACTS OR CONDITIONS WHICH APPEAR TO HIM TO BE IN CONFLICT WITH THE LETTER OR SPIRIT OF THE PROJECT PLANS AND SPECIFICATIONS, HE SHALL CONTACT THE ENGINEER FOR ADDITIONAL INFORMATION AND EXPLANATION BEFORE SUBMITTING HIS BID. SUBMISSION OF A BID BY THE CONTRACTOR SHALL CONSTITUTE ACKNOWLEDGMENT THAT, IF AWARDED THE CONTRACT, HE HAS RELIED AND IS RELYING ON HIS OWN EXAMINATION OF (1) THE SITE OF THE WORK, (2) ACCESS TO THE SITE, AND (3) ALL OTHER DATA AND MATTERS REQUISITE TO THE FULFILLMENT OF THE WORK AND ON HIS OWN KNOWLEDGE OF EXISTING FACILITIES ON AND IN THE VICINITY OF THE SITE OF THE WORK TO BE CONSTRUCTED UNDER THIS CONTRACT. THE INFORMATION PROVIDED BY THE ENGINEER IS NOT INTENDED TO BE A SUBSTITUTE FOR, OR A SUPPLEMENT TO, THE INDEPENDENT VERIFICATION BY THE CONTRACTOR TO THE EXTENT SUCH INDEPENDENT INVESTIGATION OF SITE CONDITIONS IS DEEMED NECESSARY OR DESIRABLE BY THE CONTRACTOR. CONTRACTOR SHALL ACKNOWLEDGE THAT HE HAS NOT RELIED SOLELY UPON OWNER- OR ENGINEER-FURNISHED INFORMATION REGARDING SITE CONDITIONS IN PREPARING AND SUBMITTING HIS BID.
18. CONTRACTOR SHALL BE RESPONSIBLE TO PROVIDE ALL WATER, POWER, SANITARY FACILITIES AND TELEPHONE SERVICES AS REQUIRED FOR THE CONTRACTOR'S USE DURING CONSTRUCTION.
19. CONTRACTOR SHALL BE HELD RESPONSIBLE FOR ANY FIELD CHANGES MADE WITHOUT PRIOR WRITTEN AUTHORIZATION FROM THE OWNER, ENGINEER, AND/OR GOVERNING AGENCIES.
20. CONTRACTOR SHALL EXERCISE DUE CAUTION AND SHALL CAREFULLY PRESERVE BENCH MARKS, CONTROL POINTS, REFERENCE POINTS AND ALL SURVEY STAKES, AND SHALL BEAR ALL EXPENSES FOR REPLACEMENT AND/OR ERRORS CAUSED BY THEIR UNNECESSARY LOSS OR DISTURBANCE.
21. CONTRACTOR SHALL ASSUME SOLE AND COMPLETE RESPONSIBILITY FOR JOBSITE CONDITIONS DURING THE COURSE OF CONSTRUCTION OF THIS PROJECT, INCLUDING SAFETY OF ALL PERSONS AND PROPERTY. THIS REQUIREMENT SHALL APPLY CONTINUOUSLY AND NOT BE LIMITED TO NORMAL WORKING HOURS. THE CONTRACTOR SHALL DEFEND, INDEMNIFY AND HOLD THE OWNER AND ENGINEER HARMLESS FROM ANY AND ALL LIABILITY, REAL OR ALLEGED, IN CONNECTION WITH THE PERFORMANCE OF WORK ON THIS PROJECT, EXCEPTING FOR LIABILITY ARISING FROM THE SOLE NEGLIGENCE OF THE OWNER OR THE ENGINEER.
22. CONTRACTOR SHALL BE RESPONSIBLE FOR ADEQUATELY SCHEDULING INSPECTION AND TESTING OF ALL FACILITIES CONSTRUCTED UNDER THIS CONTRACT. ALL TESTING SHALL CONFORM TO THE REGULATORY AGENCY'S STANDARD SPECIFICATIONS. ALL TESTING AND INSPECTION SHALL BE PAID FOR BY THE OWNER; ALL RE-TESTING AND/OR RE-INSPECTION SHALL BE PAID FOR BY THE CONTRACTOR.
23. IF EXISTING IMPROVEMENTS NEED TO BE DISTURBED AND/OR REMOVED FOR THE PROPER PLACEMENT OF IMPROVEMENTS TO BE CONSTRUCTED BY THESE PLANS, THE CONTRACTOR SHALL BE RESPONSIBLE FOR PROTECTING EXISTING IMPROVEMENTS FROM DAMAGE. COST OF REPLACING OR REPAIRING EXISTING IMPROVEMENTS SHALL BE INCLUDED IN THE UNIT PRICE BID FOR ITEMS REQUIRING REMOVAL AND/OR REPLACEMENT. THERE WILL BE NO EXTRA COST DUE TO THE CONTRACTOR FOR REPLACING OR REPAIRING EXISTING IMPROVEMENTS.
24. WHENEVER EXISTING FACILITIES ARE REMOVED, DAMAGED, BROKEN, OR CUT IN THE INSTALLATION OF THE WORK COVERED BY THESE PLANS OR SPECIFICATIONS, SAID FACILITIES SHALL BE REPLACED AT THE CONTRACTOR'S EXPENSE WITH MATERIALS EQUAL TO OR BETTER THAN THE MATERIALS USED IN THE ORIGINAL EXISTING FACILITIES. THE FINISHED PRODUCT SHALL BE SUBJECT TO THE APPROVAL OF THE OWNER, THE ENGINEER, AND THE RESPECTIVE REGULATORY AGENCY.
25. CONTRACTOR SHALL MAINTAIN A NEATLY MARKED SET OF FULL-SIZE AS-BUILT RECORD DRAWINGS SHOWING THE FINAL LOCATION AND LAYOUT OF ALL STRUCTURES AND OTHER FACILITIES. AS-BUILT RECORD DRAWINGS SHALL REFLECT CHANGE ORDERS, ACCOMMODATIONS, AND ADJUSTMENTS TO ALL IMPROVEMENTS CONSTRUCTED. WHERE NECESSARY, SUPPLEMENTAL DRAWINGS SHALL BE PREPARED AND SUBMITTED BY THE CONTRACTOR. PRIOR TO ACCEPTANCE OF THE PROJECT, THE CONTRACTOR SHALL DELIVER TO THE ENGINEER ONE SET OF NEATLY MARKED AS-BUILT RECORD DRAWINGS SHOWING THE INFORMATION REQUIRED ABOVE. AS-BUILT RECORD DRAWINGS SHALL BE REVIEWED AND THE COMPLETE AS-BUILT RECORD DRAWING SET SHALL BE CURRENT WITH ALL CHANGES AND DEVIATIONS REDLINED AS A PRECONDITION TO THE FINAL PROGRESS PAYMENT APPROVAL AND/OR FINAL ACCEPTANCE.
26. WHERE THE PLANS OR SPECIFICATIONS DESCRIBE PORTIONS OF THE WORK IN GENERAL TERMS BUT NOT IN COMPLETE DETAIL, IT IS UNDERSTOOD THAT ONLY THE BEST GENERAL PRACTICE IS TO PREVAIL AND THAT ONLY MATERIALS AND WORKMANSHIP OF THE FIRST QUALITY ARE TO BE USED.

GENERAL NOTES CONT.

27. CONTRACTOR SHALL BE SKILLED AND REGULARLY ENGAGED IN THE GENERAL CLASS AND TYPE OF WORK CALLED FOR IN THE PROJECT PLANS AND SPECIFICATIONS. THEREFORE, THE OWNER IS RELYING UPON THE EXPERIENCE AND EXPERTISE OF THE CONTRACTOR. PRICES PROVIDED WITHIN THE CONTRACT DOCUMENTS SHALL INCLUDE ALL LABOR AND MATERIALS NECESSARY AND PROPER FOR THE WORK CONTEMPLATED AND THAT THE WORK BE COMPLETED IN ACCORDANCE WITH THE TRUE INTENT AND PURPOSE OF THESE PLANS AND SPECIFICATIONS. THE CONTRACTOR SHALL BE COMPETENT, KNOWLEDGEABLE AND HAVE SPECIAL SKILLS IN THE NATURE, EXTENT AND INHERENT CONDITIONS OF THE WORK TO BE PERFORMED. CONTRACTOR SHALL ALSO ACKNOWLEDGE THAT THERE ARE CERTAIN PECULIAR AND INHERENT CONDITIONS EXISTENT IN THE CONSTRUCTION OF THE PARTICULAR FACILITIES WHICH MAY CREATE, DURING THE CONSTRUCTION PROGRAM, UNUSUAL OR UNSAFE CONDITIONS HAZARDOUS TO PERSONS, PROPERTY AND THE ENVIRONMENT. CONTRACTOR SHALL BE AWARE OF SUCH PECULIAR RISKS AND HAVE THE SKILL AND EXPERIENCE TO FORESEE AND TO ADOPT PROTECTIVE MEASURES TO ADEQUATELY AND SAFELY PERFORM THE CONSTRUCTION WORK WITH RESPECT TO SUCH HAZARDS.
28. CONTRACTOR SHALL BE RESPONSIBLE FOR THE REMOVAL OF ALL STRIPING AND/OR PAVEMENT MARKINGS NECESSARY TO TIE EXISTING STRIPING INTO FUTURE STRIPING. METHOD OF REMOVAL SHALL BE BY GRINDING OR SANDBLASTING.
29. CONTRACTOR SHALL PROVIDE ALL SHORING, BRACING, SLOPING OR OTHER PROVISIONS NECESSARY TO PROTECT WORKMEN FOR ALL AREAS TO BE EXCAVATED TO A DEPTH OF 4' OR MORE. FOR EXCAVATIONS 4 FEET OR MORE IN DEPTH, THE CONTRACTOR SHALL COMPLY WITH INDUSTRIAL COMMISSION OF UTAH SAFETY ORDERS SECTION 68 – EXCAVATIONS, AND SECTION 69 – TRENCHES, ALONG WITH ANY LOCAL CODES OR ORDINANCES.
30. ALL EXISTING GATES AND FENCES TO REMAIN UNLESS OTHERWISE NOTED ON PLANS. PROTECT ALL GATES AND FENCES FROM DAMAGE.

UTILITY NOTES

1. CONTRACTOR SHALL COORDINATE LOCATION OF NEW "DRY UTILITIES" WITH THE APPROPRIATE UTILITY COMPANY, INCLUDING BUT NOT LIMITED TO: TELEPHONE SERVICE, GAS SERVICE, CABLE, POWER, INTERNET.
2. EXISTING UTILITIES HAVE BEEN SHOWN ON THE PLANS USING A COMBINATION OF ON-SITE SURVEYS (BY OTHERS). PRIOR TO COMMENCING ANY WORK, IT SHALL BE THE CONTRACTOR'S RESPONSIBILITY TO HAVE EACH UTILITY COMPANY LOCATE, IN THE FIELD, THEIR MAIN AND SERVICE LINES. THE CONTRACTOR SHALL NOTIFY BLUE STAKES AT 1-800-662-4111 48 HOURS IN ADVANCE OF PERFORMING ANY EXCAVATION WORK. THE CONTRACTOR SHALL RECORD THE BLUE STAKES ORDER NUMBER AND FURNISH ORDER NUMBER TO OWNER AND ENGINEER PRIOR TO ANY EXCAVATION. IT WILL BE THE CONTRACTOR'S SOLE RESPONSIBILITY TO DIRECTLY CONTACT ANY OTHER UTILITY COMPANIES THAT ARE NOT MEMBERS OF BLUE STAKES. IT SHALL BE THE CONTRACTOR'S SOLE RESPONSIBILITY TO PROTECT ALL EXISTING UTILITIES SO THAT NO DAMAGE RESULTS TO THEM DURING THE PERFORMANCE OF THIS CONTRACT. ANY REPAIRS NECESSARY TO DAMAGED UTILITIES SHALL BE PAID FOR BY THE CONTRACTOR. THE CONTRACTOR SHALL BE REQUIRED TO COOPERATE WITH OTHER CONTRACTORS AND UTILITY COMPANIES INSTALLING NEW STRUCTURES, UTILITIES AND SERVICE TO THE PROJECT.
3. CONTRACTOR SHALL POT HOLE ALL UTILITIES TO DETERMINE IF CONFLICTS EXIST PRIOR TO BEGINNING ANY EXCAVATION. NOTIFY ENGINEER OF ANY CONFLICTS. CONTRACTOR SHALL VERIFY LOCATION AND INVERTS OF EXISTING UTILITIES TO WHICH NEW UTILITIES WILL BE CONNECTED. PRIOR TO COMMENCING ANY EXCAVATION WORK THE CONTRACTOR SHALL NOTIFY ALL UTILITY COMPANIES IN ACCORDANCE WITH THE REQUIRED PROCEDURES.
4. CARE SHOULD BE TAKEN IN ALL EXCAVATIONS DUE TO POSSIBLE EXISTENCE OF UNRECORDED UTILITY LINES. EXCAVATION REQUIRED WITHIN PROXIMITY OF EXISTING UTILITY LINES SHALL BE DONE BY HAND. CONTRACTOR SHALL REPAIR ANY DAMAGE TO EXISTING UTILITY LINES OR STRUCTURES INCURRED DURING CONSTRUCTION OPERATIONS AT HIS EXPENSE.
5. ALL VALVES AND MANHOLE COVERS SHALL BE RAISED OR LOWERED TO MEET FINISHED GRADE.
6. CONTRACTOR SHALL CUT PIPES OFF FLUSH WITH THE INSIDE WALL OF THE BOX OR MANHOLE.
7. CONTRACTOR SHALL GROUT AT CONNECTION OF PIPE TO BOX WITH NON-SHRINKING GROUT, INCLUDING PIPE VOIDS LEFT BY CUTTING PROCESS, TO A SMOOTH FINISH.
8. CONTRACTOR SHALL GROUT WITH NON-SHRINK GROUT BETWEEN GRADE RINGS AND BETWEEN BOTTOM OF INLET LID FRAME AND TOP OF CONCRETE BOX.
9. SILT AND DEBRIS IS TO BE CLEANED OUT OF ALL STORM DRAIN BOXES. CATCH BASINS ARE TO BE MAINTAINED IN A CLEANED CONDITION AS NEEDED UNTIL AFTER THE FINAL BOND RELEASE INSPECTION.
10. CONTRACTOR SHALL CLEAN ASPHALT, TAR OR OTHER ADHESIVES OFF OF ALL MANHOLE LIDS AND INLET GRATES TO ALLOW ACCESS.
11. EACH TRENCH SHALL BE EXCAVATED SO THAT THE PIPE CAN BE LAID TO THE ALIGNMENT AND GRADE AS REQUIRED. THE TRENCH WALL SHALL BE SO BRACED THAT THE WORKMEN MAY WORK SAFELY AND EFFICIENTLY. ALL TRENCHES SHALL BE DRAINED SO THE PIPE LAYING MAY TAKE PLACE IN DEWATERED CONDITIONS. THE CONTRACTOR IS SOLELY RESPONSIBLE FOR THE COST OF DEWATERING AND NO COST CHANGE WILL BE PROVIDED.
12. CONTRACTOR SHALL PROVIDE AND MAINTAIN AT ALL TIMES AMPLE MEANS AND DEVICES WITH WHICH TO REMOVE PROMPTLY AND TO PROPERLY DISPOSE OF ALL WATER ENTERING THE TRENCH EXCAVATION.
13. MAINTAIN A MINIMUM 18" VERTICAL SEPARATION DISTANCE BETWEEN ALL UTILITY CROSSINGS.
14. CONTRACTOR SHALL START INSTALLATION AT LOW POINT OF ALL NEW GRAVITY UTILITY LINES.
15. ALL BOLTED FITTINGS MUST BE GREASED AND WRAPPED.
16. UNLESS SPECIFICALLY NOTED OTHERWISE, MAINTAIN AT LEAST 2 FEET OF COVER OVER ALL STORM DRAIN LINES AT ALL TIMES (INCLUDING DURING CONSTRUCTION).
17. ALL WATER LINES SHALL BE INSTALLED A MINIMUM OF 60" OF COVER TO TOP OF PIPE BELOW FINISHED GRADE.
18. ALL SEWER LINES AND SEWER SERVICES SHALL HAVE A MINIMUM SEPARATION OF 10 FEET, PIPE EDGE TO PIPE EDGE, FROM THE WATER LINES.
19. CONTRACTOR SHALL INSTALL THRUST BLOCKING AT ALL WATERLINE ANGLE POINTS AND TEES.
20. ALL UNDERGROUND UTILITIES SHALL BE IN PLACE PRIOR TO INSTALLATION OF CURB, GUTTER, SIDEWALK AND STREET PAVING.
21. CONTRACTOR SHALL INSTALL MAGNETIC LOCATING TAPE CONTINUOUSLY OVER ALL NONMETALLIC PIPE.
22. THE CONTRACTOR SHALL NOTIFY TALISMAN CIVIL CONSULTANTS, LLC. IN WRITING AT LEAST 48 HOURS PRIOR TO BACKFILLING OF ANY PIPE WHICH STUBS TO A FUTURE PHASE OF CONSTRUCTION FOR INVERT VERIFICATION. TOLERANCE SHALL BE IN ACCORDANCE WITH THE REGULATORY AGENCY STANDARD SPECIFICATIONS.
23. UNDER NO CIRCUMSTANCE SHALL THE PIPE OR ACCESSORIES BE DROPPED INTO THE TRENCH.
24. TRENCHING INSTALLED PARALLEL TO FOOTINGS AND WALLS SHALL NOT EXTEND INTO THE BEARING PLANE OF THE FOOTING OR WALL. (1)

EROSION CONTROL GENERAL NOTES:

THE CONTRACTOR TO USE BEST MANAGEMENT PRACTICES FOR PROVIDING EROSION CONTROL FOR CONSTRUCTION OF THIS PROJECT. ALL MATERIAL AND WORKMANSHIP SHALL CONFORM TO WEBER COUNTY ORDINANCES AND ALL WORK SHALL BE SUBJECT TO INSPECTION BY THE COUNTIES. ALSO, INSPECTORS WILL HAVE THE RIGHT TO CHANGE THE FACILITIES AS NEEDED.

CONTRACTOR SHALL KEEP THE SITE WATERED TO CONTROL DUST. CONTRACTOR TO LOCATE A NEARBY HYDRANT FOR USE AND TO INSTALL TEMPORARY METER. CONSTRUCTION WATER COST TO BE INCLUDED IN BID.

WHEN GRADING OPERATIONS ARE COMPLETED AND THE DISTURBED GROUND IS LEFT "OPEN" FOR 14 DAYS OR MORE, THE AREA SHALL BE FURROWED PARALLEL TO THE CONTOURS.

THE CONTRACTOR SHALL MODIFY EROSION CONTROL MEASURES TO ACCOMMODATE PROJECT PLANNING.

LEGEND:

SYMBOL / LINETYPE	DESCRIPTION	DETAIL
4"W	4"ø C-900 PRESSURE CLASS 165 PVC WATER PIPE	APWA PLAN NO. 381,382
6"W	6"ø C-900 PRESSURE CLASS 165 PVC WATER PIPE	APWA PLAN NO. 381,382
6" F	6"ø C-900 PRESSURE CLASS 235 PVC PIPE	APWA PLAN NO. 381,382
W	PROPOSED WATER METER	APWA PLAN NO. 521
	1 1/2" WATER LATERAL	APWA PLAN NO. 552 AND DETAIL D, SHEET 6.00
8"SS HDPE	8"ø SDR35 PVC SEWER PIPE	APWA PLAN NO. 381,382
(1)SS-P	1.5"ø PRESSURE SEWER PIPE – DR-11 IPS	APWA PLAN NO. 381,382
SS	4" SANITARY SEWER LATERAL	APWA PLAN NO. 431 AND DETAIL D, SHEET 6.00
15"SD	15"ø STORM DRAIN PIPE. SEE KEYNOTE.	
G	PROPOSED GAS MAIN	
G	PROPOSED GAS METER	
	PROPOSED GAS LATERAL	
P	PROPOSED ELECTRICAL CONDUIT	
	PROPOSED FIRE HYDRANT ASSEMBLY/STAND PIPE	APWA PLAN NO. 511
⊗	PROPOSED SEWER CLEANOUT	
S	PROPOSED SEWER MANHOLE	
	PROPOSED PAVEMENT SECTION	APWA PLAN NO. 315
	ADJOINING PROPERTY BOUNDARY	PER IGES GEOTECH REPORT 11/09/12
	FUTURE IMPROVEMENTS	
	PROPOSED LOT LINE	
6"W	PROPOSED 6" WATER PIPE	
SS	PROPOSED SEWER PIPE	
	PROPOSED EDGE OF TRAVEL	
COM	PROPOSED COMMUNICATION LINE	
10"W	EXISTING 10" WATER PIPE	
P	EXISTING ELECTRICAL CONDUIT	

NOTE: LEGEND MAY CONTAIN SYMBOLS THAT ARE NOT USED IN PLAN SET.

EROSION CONTROL GENERAL NOTES:

THE CONTRACTOR TO USE BEST MANAGEMENT PRACTICES FOR PROVIDING EROSION CONTROL FOR CONSTRUCTION OF THIS PROJECT. ALL MATERIAL AND WORKMANSHIP SHALL CONFORM TO WEBER COUNTY ORDINANCES AND ALL WORK SHALL BE SUBJECT TO INSPECTION BY THE COUNTIES. ALSO, INSPECTORS WILL HAVE THE RIGHT TO CHANGE THE FACILITIES AS NEEDED.

CONTRACTOR SHALL KEEP THE SITE WATERED TO CONTROL DUST. CONTRACTOR TO LOCATE A NEARBY HYDRANT FOR USE AND TO INSTALL TEMPORARY METER. CONSTRUCTION WATER COST TO BE INCLUDED IN BID.

WHEN GRADING OPERATIONS ARE COMPLETED AND THE DISTURBED GROUND IS LEFT "OPEN" FOR 14 DAYS OR MORE, THE AREA SHALL BE FURROWED PARALLEL TO THE CONTOURS.

THE CONTRACTOR SHALL MODIFY EROSION CONTROL MEASURES TO ACCOMMODATE PROJECT PLANNING.

ALL ACCESS TO PROPERTY WILL BE FROM PUBLIC RIGHT-OF-WAYS.

THE CONTRACTOR IS REQUIRED BY STATE AND FEDERAL REGULATIONS TO PREPARE A STORM WATER POLLUTION PREVENTION PLAN AND FILE A "NOTICE OF INTENT" WITH THE UTAH DIVISION OF WATER QUALITY.

MAINTENANCE:

ALL BEST MANAGEMENT PRACTICES (BMP'S) SHOWN ON THIS PLAN MUST BE MAINTAINED AT ALL TIMES UNTIL VEGETATION IS RE-ESTABLISHED.

THE CONTRACTOR'S RESPONSIBILITY SHALL INCLUDE MAKING BI-WEEKLY CHECKS ON ALL EROSION CONTROL MEASURES TO DETERMINE IF REPAIR OR SEDIMENT REMOVAL IS NECESSARY. CHECKS SHALL BE DOCUMENTED AND COPIES OF THE INSPECTIONS KEPT ON SITE.

SEDIMENT DEPOSITS SHOULD BE REMOVED AFTER EACH RAINFALL. THEY MUST BE REMOVED WHEN THE LEVEL OF DEPOSITION REACHES APPROXIMATELY ONE-HALF THE HEIGHT OF BARRIER.

SEDIMENT TRACKED ONTO PAVED ROADS MUST BE CLEANED UP AS SOON AS PRACTICAL, BUT IN NO CASE LATER THAN THE END OF THE NORMAL WORK DAY. THE CLEAN UP WILL INCLUDE SWEEPING OF THE TRACKED MATERIAL, PICKING IT UP, AND DEPOSITING IT TO A CONTAINED AREA.

EXPOSED SLOPES:

ANY EXPOSED SLOPE THAT WILL REMAIN UNTOUCHED FOR LONGER THAN 14 DAYS MUST BE STABILIZED BY ONE OR MORE OF THE FOLLOWING METHODS:

A) SPRAYING DISTURBED AREAS WITH A TACKIFIER VIA HYDROSEED
B) TRACKING STRAW PERPENDICULAR TO SLOPES
C) INSTALLING A LIGHT-WEIGHT, TEMPORARY EROSION CONTROL BLANKET

* SEED MIXTURE FOR REVEGITATION

a. MEADOW BROME (RIGOR)	14lb/ac
b. ORCHARD GRASS	10lb/ac
c. ALFALFA (ADAK)	4lb/ac

WEBER COUNTY

2380 WASHINGTON BLVD. #240
OGDEN, UT 84401
(801) 399-8374

ROCKY MOUNTIAN POWER

1438 WEST 2550 SOUTH
OGDEN, UT 84401
(801) 629-4429

POWDER MOUNTAIN WATER & SEWER DISTRICT

PO BOX 270
EDEN, UT 84310
(801) 745-0912

PLAN REVIEW ACCEPTANCE
FOR COMPLIANCE WITH THE APPLICABLE CONSTRUCTION CODES IDENTIFIED BELOW.
☒ BUILDING ☒ STRUCTURAL
☒ MECHANICAL ☒ PLUMBING
☒ ELECTRICAL ☒ ENERGY
☐ ACCESSIBILITY ☐ FIRE
PLAN REVIEW ACCEPTANCE OF DOCUMENTS DOES NOT AUTHORIZE CONSTRUCTION TO PROCEED IN VIOLATION OF ANY FEDERAL, STATE, OR LOCAL REGULATIONS.
BY: MEM DATE: 08/24/17
WEST COAST CODE CONSULTANTS, INC.

CALL BEFORE YOU DIG! IT'S THE LAW BLUE STAKES 1 800 662 4111

NO.	BY	DATE	REVISIONS:
1	JLB	08.03.2017	ADDRESSING UNIT REVIEW COMMENTS

CAUTION
The engineer preparing these plans will not be responsible for, or liable for, unauthorized changes to or uses of these plans. All changes to the plans must be in writing and must be approved by the preparer of these plans.

HORIZON NEIGHBORHOOD PRUD
GENERAL NOTES, KEY NOTES, AND LEGEND

PREPARED FOR: SUMMIT POWDER MOUNTAIN
DATE SUBMITTED: 08.03.2017

TALISMAN CIVIL CONSULTANTS
5217 SOUTH STATE STREET, SUITE 200 MURRAY, UT 84107
801.743.1300 TEL 801.743.0300 FAX

REGISTERED PROFESSIONAL ENGINEER
No. 7899506
RYAN W. CATHEY
8/3/17
STATE OF UTAH

SHEET NUMBER
1.01

SCALE
VERTICAL: 1"= N/A
HORIZONTAL: 1"= N/A

JOB NUMBER
SLB0793

JAMESB
XREFS:

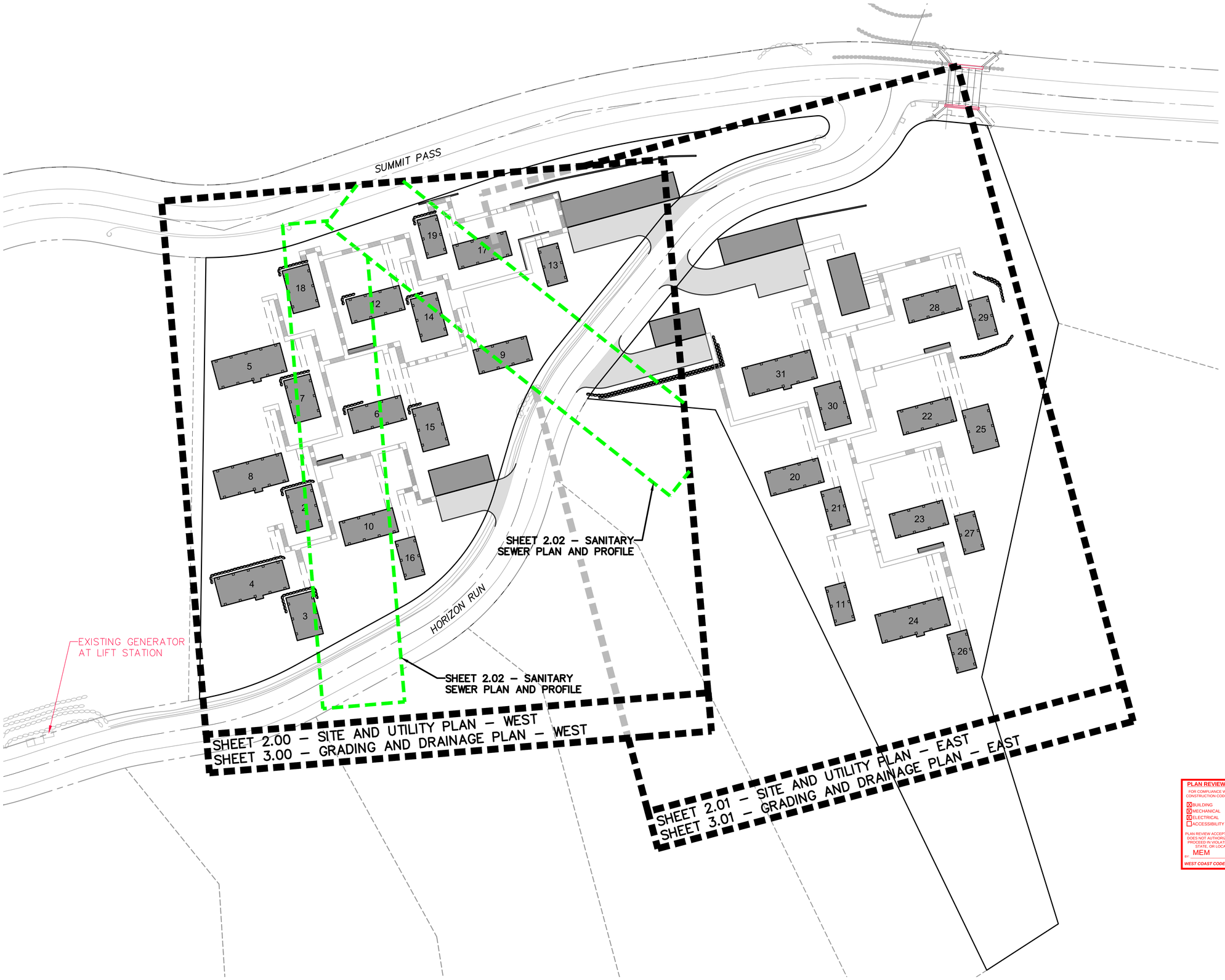

PLAN REVIEW ACCEPTANCE

FOR COMPLIANCE WITH THE APPLICABLE CONSTRUCTION CODES IDENTIFIED BELOW:

- [x] BUILDING
- [x] MECHANICAL
- [x] ELECTRICAL
- [ ] ACCESSIBILITY
- [x] STRUCTURAL
- [x] PLUMBING
- [x] ENERGY
- [ ] FIRE

PLAN REVIEW ACCEPTANCE OF DOCUMENTS DOES NOT AUTHORIZE CONSTRUCTION TO PROCEED IN VIOLATION OF ANY FEDERAL, STATE, OR LOCAL REGULATIONS.

BY: MEM DATE: 08/24/17

WEST COAST CODE CONSULTANTS, INC.

SCALE

HORIZONTAL: 1" = 40'

CALL BEFORE YOU DIG! IT'S THE LAW BLUE STAKES 1 800 662 4111

HORIZON NEIGHBORHOOD PRUD

OVERALL KEY MAP

PREPARED FOR: SUMMIT POWDER MOUNTAIN

DATE SUBMITTED: 08.03.2017

NO.	BY	DATE	REVISIONS

CAUTION

The engineer preparing these plans will not be responsible for, or liable for, unauthorized changes to or uses of these plans. All changes to the plans must be in writing and must be approved by the preparer of these plans.

TALISMAN CIVIL CONSULTANTS

5217 SOUTH STATE STREET, SUITE 200
801.743.1300 TEL 801.743.0300 FAX
MURRAY, UT 84107

REGISTERED PROFESSIONAL ENGINEER No. 7899506 RYAN W. CATHEY 8/3/17 STATE OF UTAH

SHEET NUMBER
1.02

SCALE
VERTICAL: 1" = N/A
HORIZONTAL: 1" = 40'

JOB NUMBER
SLB0793

DATE: 8/3/17 TIME: 12:56:57 PM DRAWING NAME: 102 – OVERALL KEY MAP.DWG
SERVER: NONE PAGE SETUP: PDF-C3D-24x36 LAYOUT: Layout1
PATH: N:\SLB0793\CADD\HORIZON VILLAGE\IP DESIGNER: #### PROJ. MGR: ####

JOSHB
XREFS:

DATE: 8/3/17 TIME: 12:58:17 PM DRAWING NAME: SITE_AND_UTILITY_PLAN_-_WEST
SERVER: NONE PAGE SETUP: PDF_C3D-24x36 LAYOUT: Layout1
PATH: N:\SLB0793\CADD\HORIZON VILLAGE.DP DESIGNER: ### PROJ. MGR: ###

KEY NOTES

1. ROCKERY IN THIS AREA TO BE CONSTRUCTED PER "ROCKERY CONSTRUCTION GUIDELINES, POWDER MOUNTAIN RESORT, WEBER COUNTY, UTAH" PRODUCED BY IGES DATED MAY 8, 2013.
2. INSTALL RIBBON CURB PER DETAIL A/SHEET 6.00.
3. INSTALL PAVEMENT ASPHALT PAVEMENT PER SECTION DETAIL B/SHEET 6.00.
4. PARKING GARAGE. SEE ARCHITECTURAL PLANS.
5. SEE ARCHITECTURAL PLANS FOR BUILDING PLANS.
6. BOARDWALK. SEE ARCHITECTURAL PLANS.
7. ACCESS BRIDGE. SEE ARCHITECTURAL PLANS.
8. CONCRETE RETAINING WALL. SEE STRUCTURAL PLANS.

KEY NOTES (CONT)

9. CONNECT TO WATER MAINLINE WITH 8" TEE WITH THRUST BLOCKING PER APWA STANDARD PLAN NO. 561.
10. CONNECT TO WATER MAINLINE WITH 6" HOT TAP.
11. INSTALL 6"x6"x6" TEE WITH THRUST BLOCKING PER APWA STANDARD NO. 561.
12. INSTALL 4"ø GATE VALVE WITH THRUST BLOCKING PER APWA STANDARD PLAN NO. 561.
13. INSTALL 6"ø GATE VALVE WITH THRUST BLOCKING PER APWA STANDARD PLAN NO. 561.
14. INSTALL 8"x4" REDUCER WITH THRUST BLOCKING PER APWA STANDARD PLAN NO. 561.
15. CONNECT TO EXISTING 8" WATER STUB.
16. INSTALL 1 1/2" SERVICE LATERAL PER APWA STANDARD PLAN NO. 552 AND DETAIL D, SHEET 6.00.
17. INSTALL 4"ø 11.25° BEND WITH THRUST BLOCKING PER APWA STANDARD PLAN NO. 561.
18. INSTALL 4"ø 22.5° BEND WITH THRUST BLOCKING PER APWA STANDARD PLAN NO. 561.
19. INSTALL 4"ø 45° BEND WITH THRUST BLOCKING PER APWA STANDARD PLAN NO. 561.
20. INSTALL 8"ø 90° BEND WITH THRUST BLOCKING PER APWA STANDARD PLAN NO. 561.
21. INSTALL 6"ø 22.5° BEND WITH THRUST BLOCKING PER APWA STANDARD PLAN NO. 561.
22. INSTALL 6"ø 45° BEND WITH THRUST BLOCKING PER APWA STANDARD PLAN NO. 561.

KEY NOTES (CONT)

23. INSTALL 4"ø WASHOUT VALVE PER APWA STANDARD PLAN NO. 571.
24. INSTALL AIR RELEASE ASSEMBLY PER APWA STANDARD PLAN NO. 575.
25. CONSTRUCT 4" METER PER APWA STANDARD PLAN NO. 523.
26. INSTALL FIRE DEPARTMENT CONNECTION PER DETAIL E/SHEET 6.00. COORDINATE WITH WEBER COUNTY FIRE MARSHAL.
27. INSTALL STAND PIPE PER DETAIL E/SHEET 6.00.
28. INSTALL 4'ø SANITARY SEWER MANHOLE PER APWA STANDARD PLAN NO. 411 WITH DEEP DROP INLET PER APWA STANDARD PLAN NO. 433.
29. INSTALL 4" SANITARY SEWER LATERAL AND CLEANOUT PER APWA STANDARD PLAN NO. 431 AND DETAIL D, SHEET 6.00.
30. ELECTRICAL POWER CONDUIT FROM EXISTING GENERATOR AT LIFT STATION TO BOOSTER PUMP VAULT FOR BACKUP POWER. SEE BOWEN COLLINS ELECTRICAL PLANS.
31. WYE CONNECT TO 8"ø SEWER LINE.
32. GAS PIPES, AND STORAGE TANKS (1,000 GAL) TO BE EXCAVATED AND TRENCHED BY CONTRACTOR. INSTALLATION BY OTHERS.
33. FIRE CACHE. SEE ARCHITECTURAL PLANS.
34. INSTALL FIRE HYDRANT ASSEMBLY PER APWA STANDARD PLAN NO. 511.
35. PROPANE TANK PIT PER DETAIL C/SHEET 6.00.
36. INSTALL 5'ø SANITARY SEWER MANHOLE PER APWA STANDARD PLAN NO. 411.
37. INSTALL 4'ø SANITARY SEWER MANHOLE PER APWA STANDARD PLAN NO. 411.
38. INSTALL BOOSTER PUMP VAULT PER DETAIL A, SHEET 6.02.
39. INSTALL 1 1/2" BALL VALVE.
40. CONNECT TO EXISTING BACKUP GENERATOR. SEE BOWEN COLLINS ELECTRICAL PLANS.
41. ELECTRICAL POWER CONDUIT, TRANSFORMERS AND PULL BOXES. SEE SALMON ELECTRICAL PLANS.
42. POWER METER BASE AND MAIN CIRCUIT BREAKER, SEE SALMON ELECTRICAL PLANS.
43. BOOSTER PUMP VAULT ELECTRICAL EQUIPMENT, SEE DETAIL B, SHEET 6.02. SEE BOWEN COLLINS ELECTRICAL PLANS.
44. INSTALL 15"ø RCP CLASS 3 CULVERT WITH FLARED END SECTIONS TO MATCH EXISTING FLOWLINE OF DRAINAGE CHANNEL
45. INSTALL E/ONE GRINDER PUMP STATION MODEL DH071. WITH E/ONE SENTRY ALARM PANEL INCLUDING GENERATOR RECEPTACLE WITH AUTO TRANSFER AND GFCI RECEPTACLE. ALARM PANELS SHALL BE INSTALLED WITHIN LINE OF SIGHT OF ENTRY TO UNIT. SEE DETAIL SHEET 6.03.
46. INSTALL E/ONE GRINDER PUMP STATION MODEL DH151. WITH E/ONE SENTRY ALARM PANEL INCLUDING GENERATOR RECEPTACLE WITH AUTO TRANSFER AND GFCI RECEPTACLE. ALARM PANELS SHALL BE INSTALLED WITHIN LINE OF SIGHT OF ENTRY TO UNIT. SEE DETAIL SHEET 6.03.
47. CONSTRUCT ROCK WALL WITH GUARDRAIL. SEE STRUCTURAL PLANS.
48. WYE CONNECT 1.5"ø SEWER PIPE
49. CONSTRUCT 4' WIDE x 1' DEEP DRAINAGE SWALE. LINE SWALE WITH D50=6" RIP RAP.
50. INSTALL CHECK DAM PER DETAIL A, SHEET 6.04. CHECK DAMS TO BE INSTALLED AT EVERY 12" IN ELEVATION RISE AS SHOWN ON PLAN.
51. INSTALL COMMUNICATION CONDUIT.
52. INSTALL COMMUNICATION BOX.
53. INSTALL P-TYPE CURB PER APWA PLAN NO. 209.
54. CONSTRUCT CURB TRANSITION.
55. CONSTRUCT 6" CURB CUT PER DETAIL B/SHEET 6.04.
56. INSTALL CATCH BASIN PER APWA STANDARD PLAN NO. 315, 308, AND 206.
57. INSTALL 15"ø CORRUGATED HDPE STORM DRAIN PIPE PER APWA STANDARD PLAN NO. 381, AND 382.
58. INSTALL FLARED END SECTION PER APWA STANDARD PLAN NO. 323.
59. INSTALL 8"ø 45° BEND WITH THRUST BLOCKING PER APWA STANDARD PLAN NO. 561.
60. INSTALL 8"x4" REDUCER WITH THRUST BLOCKING PER APWA STANDARD PLAN NO. 561.
61. INSTALL 8"ø GATE VALVE WITH THRUST BLOCKING PER APWA STANDARD PLAN NO. 561.
62. INSTALL 8"x6" REDUCER WITH THRUST BLOCKING PER APWA STANDARD PLAN NO. 561.
63. CONSTRUCT 18'x10' D50=9" RIP RAP OUTFALL.

SEE SHEET 2.02 FOR PLAN AND PROFILE

SEE SHEET 2.02 FOR PLAN AND PROFILE

AT EXISTING LIFT STATION GENERATOR SEE SHEET 1.02

HORIZON RUN

SUMMIT PASS

PUE

R.O.W.

PLAN REVIEW ACCEPTANCE
FOR COMPLIANCE WITH THE APPLICABLE CONSTRUCTION CODES IDENTIFIED BELOW.
☒ BUILDING ☒ STRUCTURAL
☒ MECHANICAL ☒ PLUMBING
☒ ELECTRICAL ☒ ENERGY
☐ ACCESSIBILITY ☐ FIRE
PLAN REVIEW ACCEPTANCE OF DOCUMENTS DOES NOT AUTHORIZE CONSTRUCTION TO PROCEED IN VIOLATION OF ANY FEDERAL, STATE, OR LOCAL REGULATIONS.
BY MEM DATE 08/24/17
WEST COAST CODE CONSULTANTS, INC.

CALL BEFORE YOU DIG! IT'S THE LAW BLUE STAKES 1 800 662 4111

SCALE
HORIZONTAL: 1" = 20'

NO.	BY	DATE	REVISIONS
1	AJB	08.03.2017	ADDRESSING UNIT, SEWER COMMENTS

CAUTION

The engineer preparing these plans will not be responsible for, or liable for, unauthorized changes to or uses of these plans. All changes to the plans must be in writing and must be approved by the preparer of these plans.

HORIZON NEIGHBORHOOD PRUD

SITE AND UTILITY PLAN - WEST

DATE SUBMITTED: 08.03.2017

PREPARED FOR: SUMMIT POWDER MOUNTAIN

TALISMAN CIVIL CONSULTANTS
MURRAY, UT 84107
5627 SOUTH STATE STREET, SUITE 200
801.743.0300 TEL 801.743.0300 FAX

REGISTERED PROFESSIONAL ENGINEER
No. 7899506
RYAN W. CATHEY
8/3/17
STATE OF UTAH

SHEET NUMBER
2.00

SCALE
VERTICAL: 1"= N/A
HORIZONTAL: 1"= 20'

JOB NUMBER
SLB0793

JOSHB
XREFS:

DATE: 8/3/17 TIME: 12:59:35 PM DRAWING NAME: ...SITE_AND_UTILITY_PLAN - EAST.DWG
SERVER: NONE PAGE SETUP: PDF-C3D-24x36 LAYOUT: Layout1
PATH: N:\SLB0793\CADD\HORIZON VILLAGE\JP DESIGNER: ### PROJ. MGR: ###

KEY NOTES

1. ROCKERY IN THIS AREA TO BE CONSTRUCTED PER "ROCKERY CONSTRUCTION GUIDELINES, POWDER MOUNTAIN RESORT, WEBER COUNTY, UTAH" PRODUCED BY IGES DATED MAY 8, 2013.
2. INSTALL RIBBON CURB PER DETAIL A/SHEET 6.00.
3. INSTALL PAVEMENT ASPHALT PAVEMENT PER SECTION DETAIL B/SHEET 6.00.

KEY NOTES (CONT)

4. PARKING GARAGE. SEE ARCHITECTURAL PLANS.
5. SEE ARCHITECTURAL PLANS FOR BUILDING PLANS.
6. BOARDWALK. SEE ARCHITECTURAL PLANS.
7. ACCESS BRIDGE. SEE ARCHITECTURAL PLANS.
8. CONCRETE RETAINING WALL. SEE STRUCTURAL PLANS.
9. CONNECT TO WATER MAINLINE WITH 8" TEE WITH THRUST BLOCKING PER APWA STANDARD PLAN NO. 561.
10. CONNECT TO WATER MAINLINE WITH 6" HOT TAP.
11. INSTALL 6"x6"x6" TEE WITH THRUST BLOCKING PER APWA STANDARD PLAN NO. 561.
12. INSTALL 4"ø GATE VALVE WITH THRUST BLOCKING PER APWA STANDARD PLAN NO. 561.
13. INSTALL 6"ø GATE VALVE WITH THRUST BLOCKING PER APWA STANDARD PLAN NO. 561.

KEY NOTES (CONT)

14. INSTALL 6"x4" REDUCER WITH THRUST BLOCKING PER APWA STANDARD PLAN NO. 561.
15. CONNECT TO EXISTING 8" WATER STUB.
16. INSTALL 1 1/2" SERVICE LATERAL PER APWA STANDARD PLAN NO. 552 AND DETAIL D, SHEET 6.00.
17. INSTALL 4"ø 11.25° BEND WITH THRUST BLOCKING PER APWA STANDARD PLAN NO. 561.
18. INSTALL 4"ø 22.5° BEND WITH THRUST BLOCKING PER APWA STANDARD PLAN NO. 561.
19. INSTALL 4"ø 45° BEND WITH THRUST BLOCKING PER APWA STANDARD PLAN NO. 561.
20. INSTALL 8"ø 90° BEND WITH THRUST BLOCKING PER APWA STANDARD PLAN NO. 561.
21. INSTALL 6"ø 22.5° BEND WITH THRUST BLOCKING PER APWA STANDARD PLAN NO. 561.
22. INSTALL 6"ø 45° BEND WITH THRUST BLOCKING PER APWA STANDARD PLAN NO. 561.
23. INSTALL 4"ø WASHOUT VALVE PER APWA STANDARD PLAN NO. 571.
24. INSTALL AIR RELEASE ASSEMBLY PER APWA STANDARD PLAN NO. 575.
25. CONSTRUCT 4" METER PER APWA STANDARD PLAN NO. 523.
26. INSTALL FIRE DEPARTMENT CONNECTION. COORDINATE WITH WEBER COUNTY FIRE MARSHAL.
27. INSTALL STAND PIPE PER DETAIL E/SHEET 6.00.
28. INSTALL 4'ø SANITARY SEWER MANHOLE PER APWA STANDARD PLAN NO. 411 WITH DEEP DROP INLET PER APWA STANDARD PLAN NO. 433.

KEY NOTES (CONT)

29. INSTALL 4" SANITARY SEWER LATERAL AND CLEANOUT PER APWA STANDARD PLAN NO. 431 AND DETAIL D, SHEET 6.00.
30. ELECTRICAL POWER CONDUIT FROM EXISTING GENERATOR AT LIFT STATION TO BOOSTER PUMP VAULT FOR BACKUP POWER. SEE BOWEN COLLINS ELECTRICAL PLANS.
31. WYE CONNECT TO 8"ø SEWER LINE.
32. GAS PIPES, AND STORAGE TANKS (1,000 GAL) TO BE EXCAVATED AND TRENCHED BY CONTRACTOR. INSTALLATION BY OTHERS.
33. FIRE CACHE. SEE ARCHITECTURAL PLANS.
34. INSTALL FIRE HYDRANT ASSEMBLY PER APWA STANDARD PLAN NO. 511.
35. PROPANE TANK PIT PER DETAIL C/SHEET 6.00.
36. INSTALL 5'ø SANITARY SEWER MANHOLE PER APWA STANDARD PLAN NO. 411.
37. INSTALL 4'ø SANITARY SEWER MANHOLE PER APWA STANDARD PLAN NO. 411.
38. INSTALL BOOSTER PUMP VAULT PER DETAIL A, SHEET 6.02.
39. INSTALL 1 1/2" BALL VALVE.
40. CONNECT TO EXISTING BACKUP GENERATOR. SEE BOWEN COLLINS ELECTRICAL PLANS.
41. ELECTRICAL POWER CONDUIT, TRANSFORMERS AND PULL BOXES. SEE SALMON ELECTRICAL PLANS.
42. POWER METER BASE AND MAIN CIRCUIT BREAKER. SEE SALMON ELECTRICAL PLANS.
43. BOOSTER PUMP VAULT ELECTRICAL EQUIPMENT, SEE DETAIL B, SHEET 6.02. SEE BOWEN COLLINS ELECTRICAL PLANS.
44. INSTALL 15"ø RCP CLASS 3 CULVERT WITH FLARED END SECTIONS TO MATCH EXISTING FLOWLINE OF DRAINAGE CHANNEL
45. INSTALL E/ONE GRINDER PUMP STATION MODEL DH071. WITH E/ONE SENTRY ALARM PANEL INCLUDING GENERATOR RECEPTACLE WITH AUTO TRANSFER AND GFCI RECEPTACLE. ALARM PANELS SHALL BE INSTALLED WITHIN LINE OF SIGHT OF ENTRY TO UNIT. SEE DETAIL SHEET 6.03.

KEY NOTES (CONT)

46. INSTALL E/ONE GRINDER PUMP STATION MODEL DH151. WITH E/ONE SENTRY ALARM PANEL INCLUDING GENERATOR RECEPTACLE WITH AUTO TRANSFER AND GFCI RECEPTACLE. ALARM PANELS SHALL BE INSTALLED WITHIN LINE OF SIGHT OF ENTRY TO UNIT. SEE DETAIL SHEET 6.03.
47. CONSTRUCT ROCK WALL WITH GUARDRAIL. SEE STRUCTURAL PLANS.
48. WYE CONNECT 1.5"ø SEWER PIPE
49. CONSTRUCT 4' WIDE x 1' DEEP DRAINAGE SWALE. LINE SWALE WITH D50=6" RIP RAP.
50. INSTALL CHECK DAM PER DETAIL A, SHEET 6.04. CHECK DAMS TO BE INSTALLED AT EVERY 12" IN ELEVATION RISE AS SHOWN ON PLAN.
51. INSTALL COMMUNICATION CONDUIT.
52. INSTALL COMMUNICATION BOX.
53. INSTALL P-TYPE CURB PER APWA STANDARD PLAN NO. 209.
54. CONSTRUCT CURB TRANSITION.
55. CONSTRUCT 6" CURB CUT PER DETAIL B/SHEET 6.04.
56. INSTALL CATCH BASIN PER APWA STANDARD PLAN NO. 315, 308, AND 206. SEE DETAIL SHEET 6.04.
57. INSTALL 15"ø CORRUGATED HDPE STORM DRAIN PIPE PER APWA STANDARD PLAN NO. 381, AND 382.
58. INSTALL FLARED END SECTION PER APWA STANDARD PLAN NO. 323.
59. INSTALL 8"ø 45° BEND WITH THRUST BLOCKING PER APWA STANDARD PLAN NO. 561.
60. INSTALL 8"x4" REDUCER WITH THRUST BLOCKING PER APWA STANDARD PLAN NO. 561.
61. INSTALL 8"ø GATE VALVE WITH THRUST BLOCKING PER APWA STANDARD PLAN NO. 561.
62. INSTALL 8"x6" REDUCER WITH THRUST BLOCKING PER APWA STANDARD PLAN NO. 561.
63. CONSTRUCT 18'x10' D50=9" RIP RAP OUTFALL.

SCALE
HORIZONTAL: 1" = 20'

PLAN REVIEW ACCEPTANCE
FOR COMPLIANCE WITH THE APPLICABLE CONSTRUCTION CODES IDENTIFIED BELOW.
☒ BUILDING ☒ STRUCTURAL
☒ MECHANICAL ☒ PLUMBING
☒ ELECTRICAL ☒ ENERGY
☐ ACCESSIBILITY ☐ FIRE
PLAN REVIEW ACCEPTANCE OF DOCUMENTS DOES NOT AUTHORIZE CONSTRUCTION TO PROCEED IN VIOLATION OF ANY FEDERAL, STATE, OR LOCAL REGULATIONS.
BY: MEM DATE: 08/24/17
WEST COAST CODE CONSULTANTS, INC.

NO.	BY	DATE	REVISIONS
1	AJB	08.03.2017	ADDRESSING UNIT, SEWER COMMENTS

CAUTION

The engineer preparing these plans will not be responsible for, or liable for, unauthorized changes to or uses of these plans. All changes to the plans must be in writing and must be approved by the preparer of these plans.

HORIZON NEIGHBORHOOD PRUD

SITE AND UTILITY PLAN - EAST

PREPARED FOR: SUMMIT POWDER MOUNTAIN

DATE SUBMITTED: 08.03.2017

TALISMAN CIVIL CONSULTANTS
5217 SOUTH STATE STREET, SUITE 200 MURRAY, UT 84107
801.743.3300 TEL 801.743.3300 FAX

REGISTERED PROFESSIONAL ENGINEER
No. 7899506
RYAN W. CATHEY
8/3/17
STATE OF UTAH

SHEET NUMBER
2.01

SCALE
VERTICAL: 1"= N/A
HORIZONTAL: 1"= 20'

JOB NUMBER
SLB0793

CALL BEFORE YOU DIG!
IT'S THE LAW
BLUE STAKES 1 800 662 4111

XREFS:

DATE: 8/3/17 TIME: 1:03:23 PM DRAWING: SANITARY SEWER PLAN AND PROFILE.DWG
SERVER: NONE PAGE SETUP: PDF_C3D-24x36 LAYOUT: Layout1
PATH: N:\SLB0793\CADD\HORIZON VILLAGE.DWP DESIGNER: ### PROJ. MGR: ###

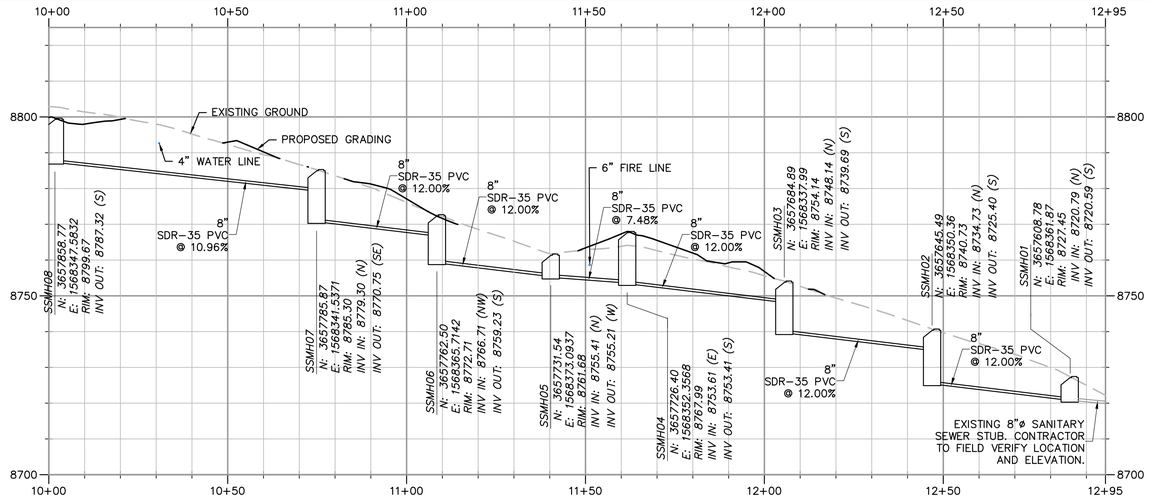

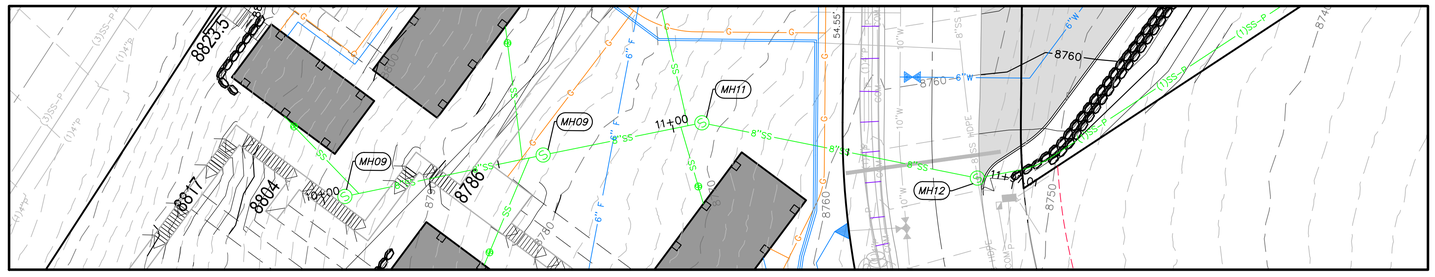

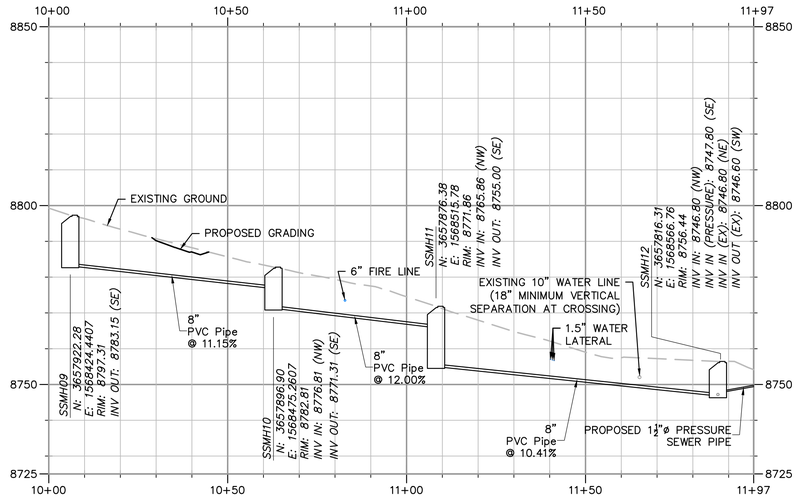

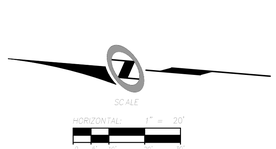

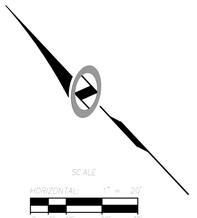

NO.	BY	DATE	REVISIONS

CAUTION

The engineer preparing these plans will not be responsible for, or liable for, unauthorized changes to or uses of these plans. All changes to the plans must be in writing and must be approved by the preparer of these plans.

HORIZON NEIGHBORHOOD PRUD

SANITARY SEWER PLAN AND PROFILE

PREPARED FOR: SUMMIT POWDER MOUNTAIN

DATE SUBMITTED: 08.03.2017

TALISMAN CIVIL CONSULTANTS
527 SOUTH STATE STREET, SUITE 200 MURRAY, UT 84107
801.743.1300 TEL 801.743.0300 FAX

PLAN REVIEW ACCEPTANCE

FOR COMPLIANCE WITH THE APPLICABLE CONSTRUCTION CODES IDENTIFIED BELOW.

☒ BUILDING ☒ STRUCTURAL
☒ MECHANICAL ☒ PLUMBING
☒ ELECTRICAL ☒ ENERGY
☐ ACCESSIBILITY ☐ FIRE

PLAN REVIEW ACCEPTANCE OF DOCUMENTS DOES NOT AUTHORIZE CONSTRUCTION TO PROCEED IN VIOLATION OF ANY FEDERAL, STATE, OR LOCAL REGULATIONS.

BY: MEM DATE: 08/24/17

WEST COAST CODE CONSULTANTS, INC.

REGISTERED PROFESSIONAL ENGINEER
No. 7899506
RYAN W. CAMPBELL
08/3/17
STATE OF UTAH

CALL BEFORE YOU DIG!
IT'S THE LAW
BLUE STAKES 1 800 662 4111

SHEET NUMBER
2.02

SCALE
VERTICAL: 1"= N/A
HORIZONTAL: 1"= 20'

JOB NUMBER
SLB0793

JOSHB
KREFS

DATE: 8/3/17 TIME: 1:05:11 PM DRAWING NAME: GRADING AND DRAINAGE PLAN - WEST.DWG
SERVER: NONE PAGE SETUP: PDF-C3D-24x36 LAYOUT: Layout1
PATH: N:\SLB0793\CADD\HORIZON VILLAGE\JP DESIGNER: #### PROJ. MGR: ####

JOSHB
XREFS:

PLAN REVIEW ACCEPTANCE
THIS PLAN HAS BEEN REVIEWED FOR GENERAL COMPLIANCE WITH THE APPLICABLE ORDINANCES AND DESIGN STANDARDS OF PARK CITY MUNICIPAL CORPORATION.
☐ BUILDING ☐ MECHANICAL ☐ ELECTRICAL ☐ FIRE/SAFETY ☐ STRUCTURAL ☐ PLUMBING ☐ ENERGY
APPROVAL OF THIS PLAN DOES NOT AUTHORIZE CONSTRUCTION TO COMMENCE UNTIL ALL APPLICABLE PERMITS HAVE BEEN ISSUED BY THE LOCAL REGULATORY AGENCY.
BY: MEM DATE: 09/29/17
WEST QUARTER CORNER CORNER MARK, NAD

ABBREVIATIONS:

BC	BUILDING CORNER
BS	BOTTOM OF STAIRS
BW	BOTTOM OF WALL
EX	EXISTING
FG	FINISHED GRADE
FL	FLOWLINE
TC	TOP OF CURB
TS	TOP OF STAIRS
TW	TOP OF WALL

CALL BEFORE YOU DIG
BLUE STAKES 811
811 OR 800 662 4111

REGISTERED PROFESSIONAL ENGINEER
No. 7899506
CHRISTOPHER M. CLAWSON
STATE OF UTAH

TALISMAN CIVIL CONSULTANTS
6217 SOUTH STATE STREET, SUITE 200 MURRAY, UT 84107
801.743.1300 TEL 801.743.0300 FAX

HORIZON NEIGHBORHOOD PRUD
GRADING AND DRAINAGE PLAN - WEST

PREPARED FOR: SUMMIT POWDER MOUNTAIN DATE SUBMITTED: 08.03.2017

NO.	BY	DATE	REVISIONS:

The engineer preparing these plans will not be responsible for, or liable for, unauthorized changes to or uses of these plans. All changes to the plans must be in writing and must be approved by the preparer of these plans.

JOB NUMBER SLB0793
SCALE VERTICAL: 1"= N/A HORIZONTAL: 1"= 20'
SHEET NUMBER 3.00

ABBREVIATIONS:

BG	BUILDING
BK	BOARDWALK
BS	BOTTOM OF STAIRS
BW	BOTTOM OF WALL
EX	EXISTING
FG	FINISHED GRADE
FL	FLOWLINE
TC	TOP OF CURB
TS	TOP OF STAIRS
TW	TOP OF WALL

PLAN REVIEW ACCEPTANCE

FOR COMPLIANCE WITH THE APPLICABLE CONSTRUCTION CODES IDENTIFIED BELOW.

- [x] BUILDING
- [x] MECHANICAL
- [x] ELECTRICAL
- [ ] ACCESSIBILITY
- [x] STRUCTURAL
- [x] PLUMBING
- [x] ENERGY
- [ ] FIRE

PLAN REVIEW ACCEPTANCE OF DOCUMENTS DOES NOT AUTHORIZE CONSTRUCTION TO PROCEED IN VIOLATION OF ANY FEDERAL, STATE, OR LOCAL REGULATIONS.

BY: MEM DATE: 08/24/17

WEST COAST CODE CONSULTANTS, INC.

SCALE

HORIZONTAL: 1" = 20'

CALL BEFORE YOU DIG! IT'S THE LAW BLUE STAKES 1 800 662 4111

HORIZON NEIGHBORHOOD PRUD

GRADING AND DRAINAGE PLAN - EAST

PREPARED FOR: SUMMIT POWDER MOUNTAIN

DATE SUBMITTED: 08.03.2017

NO.	BY	DATE	REVISIONS:

CAUTION

The engineer preparing these plans will not be responsible for, or liable for, unauthorized changes to or uses of these plans. All changes to the plans must be in writing and must be approved by the preparer of these plans.

TALISMAN CIVIL CONSULTANTS
5217 SOUTH STATE STREET, SUITE 200
801.743.1300 TEL 801.743.0300 FAX
MURRAY, UT 84107

REGISTERED PROFESSIONAL ENGINEER No. 7899506 RYAN W. CATHEY 8/3/17 STATE OF UTAH

SHEET NUMBER
3.01

SCALE
VERTICAL: 1"= N/A
HORIZONTAL: 1"= 20'

JOB NUMBER
SLB0793

DATE: 8/3/17 TIME: 1:07:33 PM DRAWING: GRADING AND DRAINAGE PLAN - EAST.DWG
SERVER: NONE PAGE SETUP: PDF-C3D-24x36 LAYOUT: Layout1
PATH: N:\SLB0793\CADD\HORIZON VILLAGE\IP DESIGNER: #### PROJ. MGR: ####
JOSHB
XREFS:

DATE: 8/3/17 TIME: 1:09:19 PM DRAWING NAME: EROSION CONTROL PLAN - OVERALL.DWG
SERVER: NONE PAGE SETUP: PDF_C3D_24x36 LAYOUT: Layout1
PATH: N:\SLB0793\CADD\HORIZON VILLAGE.DWP DESIGNER: #### PROJ. MGR: ####

SCOPE OF WORK:

PROVIDE, INSTALL AND/OR CONSTRUCT THE FOLLOWING PER THE SPECIFICATIONS GIVEN OR REFERENCED, THE DETAILS NOTED, AND/OR AS SHOWN ON THE CONSTRUCTION DRAWINGS:

HATCHING INDICATES AREAS TO RECEIVE 4" TOPSOIL AND TO BE SEEDED FOR NATURAL VEGETATION*. AREAS RECEIVING SEEDING FOR NATURAL REVEGETATION MUST BE COVERED WITH AN EROSION CONTROL BLANKET AFTER THE FINAL GRADING AND SEEDING ARE FINISHED. INSTALL NORTH AMERICAN GREEN SC-150 BLANKET OR APPROVED EQUAL. FOLLOW MANUFACTURER'S SPECIFICATIONS. INSTALL NORTH AMERICAN GREEN P300 EROSION CONTROL BLANKET ON ALL SLOPES GREATER THAN 1.5:1. RE-SEED AREA IS APPROXIMATE, CONTRACTOR IS TO REVEGITATE ALL DISTURBED AREAS.

STABILIZED CONSTRUCTION ENTRANCE FOR SITE INGRESS/EGRESS. IF ALTERNATE ACCESS POINTS ARE APPROVED BY OWNER, ADDITIONAL STABILIZED CONSTRUCTION ENTRANCES WILL BE REQUIRED.

INSTALL SILT FENCE ALONG DOWN GRADIENT LIMITS OF DISTURBANCE AS SHOWN ON PLAN.

INSTALL ORANGE SAFETY FENCING AROUND OUTER LIMITS OF PROJECT PRIOR TO GRADING.

PLAN REVIEW ACCEPTANCE

FOR COMPLIANCE WITH THE APPLICABLE CONSTRUCTION CODES IDENTIFIED BELOW

[X] BUILDING	[X] STRUCTURAL
[X] MECHANICAL	[X] PLUMBING
[X] ELECTRICAL	[X] ENERGY
[ ] ACCESSIBILITY	[ ] FIRE

PLAN REVIEW ACCEPTANCE OF DOCUMENTS DOES NOT AUTHORIZE CONSTRUCTION TO PROCEED IN VIOLATION OF ANY FEDERAL, STATE, OR LOCAL REGULATIONS.

BY: MEM DATE: 08/24/17

WEST COAST CODE CONSULTANTS, INC.

SCALE
HORIZONTAL: 1" = 40'
0 20 40 80

CALL BEFORE YOU DIG! IT'S THE LAW BLUE STAKES 1 800 662 4111

NO.	BY	DATE	REVISIONS

CAUTION

The engineer preparing these plans will not be responsible for, or liable for, unauthorized changes to or uses of these plans. All changes to the plans must be in writing and must be approved by the preparer of these plans.

HORIZON NEIGHBORHOOD PRUD

EROSION CONTROL PLAN - OVERALL

PREPARED FOR: SUMMIT POWDER MOUNTAIN

DATE SUBMITTED: 08.03.2017

TALISMAN CIVIL CONSULTANTS
MURRAY, UT 84107
5217 SOUTH STATE STREET, SUITE 200
801.743.1300 TEL 801.743.0300 FAX

REGISTERED PROFESSIONAL ENGINEER
No. 7899506
RYAN W. CATHEY
8/3/17
STATE OF UTAH

SHEET NUMBER
4.00

SCALE
VERTICAL: 1" = N/A
HORIZONTAL: 1" = 40'

JOB NUMBER
SLB0793

JOSHUA KREPS

DATE: 8/3/17 TIME: 1:09:41 PM DRAWING NAME: 600 - DETAILS.DWG
SERVER: NONE PAGE SETUP: PDF-c30-24x36 LAYOUT: Layout1
PATH: N:\SLB0793\CADD\HORIZON VILLAGE\JP DESIGNER: ### PROJ. MGR: ###

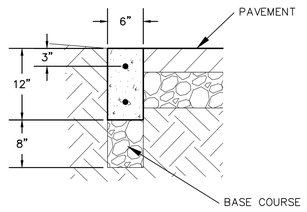

A — RIBBON CURB
(MODIFIED TYPE P CURB)
NTS

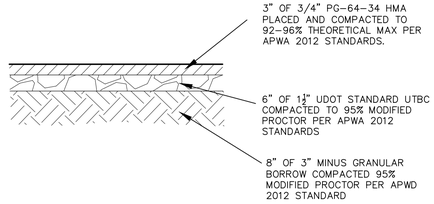

B — PARKING ASPHALT SECTION
NTS

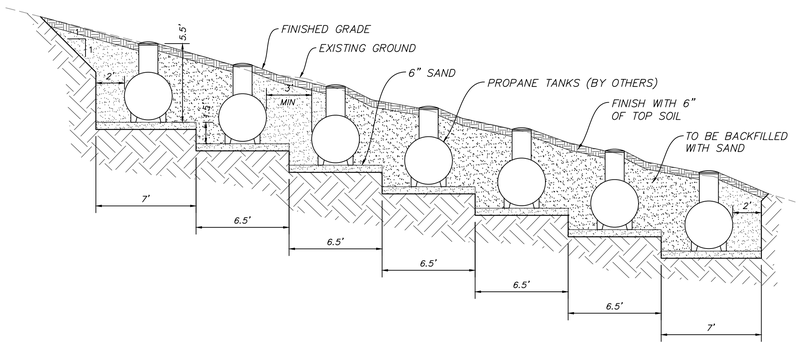

SECTION A–A

C VAR — PROPANE TANK PIT
NTS

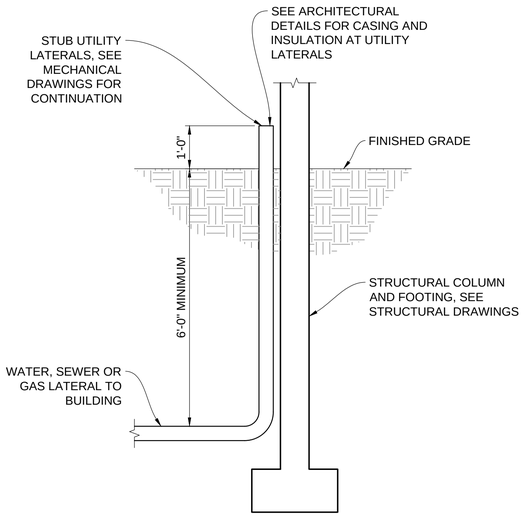

D VAR — SERVICE LATERAL DETAIL
NTS

NARRATIVE: THIS PLAN MAY BE USED FOR THE CONSTRUCTION OF A STORM WATER BEST MANAGEMENT PRACTICE (BMP). IT IS NOT INCLUSIVE OF ALL PRACTICES AVAILABLE AND IS ONLY SPECIFIC TO THE CONSTRUCTION OF THIS TYPE. MAINTENANCE OF THIS TYPE OF INSTALLATION IS IMPORTANT AND SHOULD BE CONTINUOUSLY MONITORED BY THE CONTRACTOR AND ENGINEER. DETAILS SHOWN HERE HIGHLIGHT IMPORTANT PARTS OF CONSTRUCTION, AND SHOULD BE MODIFIED AS NEEDED.

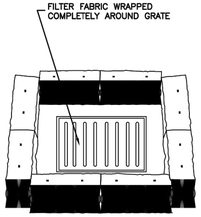

STRAW BALE BARRIER
(PLAN No. 121)

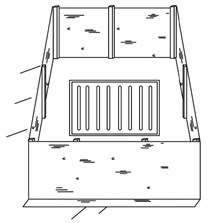

SILT FENCE
(PLAN No. 122)

Inlet protection - fence or straw bale

February 2006 15 Plan 124 Sheet 3 of 3

NARRATIVE: THIS PLAN MAY BE USED FOR THE CONSTRUCTION OF A STORM WATER BEST MANAGEMENT PRACTICE (BMP). IT IS NOT INCLUSIVE OF ALL PRACTICES AVAILABLE AND IS ONLY SPECIFIC TO THE CONSTRUCTION OF THIS TYPE. MAINTENANCE OF THIS TYPE OF INSTALLATION IS IMPORTANT AND SHOULD BE CONTINUOUSLY MONITORED BY THE CONTRACTOR AND ENGINEER. DETAILS SHOWN HERE HIGHLIGHT IMPORTANT PARTS OF CONSTRUCTION, AND SHOULD BE MODIFIED AS NEEDED.

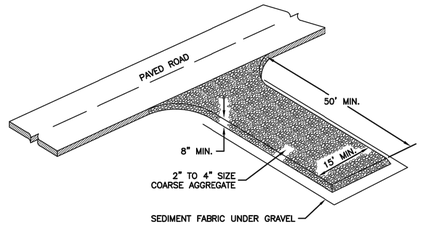

Stabilized roadway entrance

February 2006 19 Plan 126

NARRATIVE: THIS PLAN MAY BE USED FOR THE CONSTRUCTION OF A STORM WATER BEST MANAGEMENT PRACTICE (BMP). IT IS NOT INCLUSIVE OF ALL PRACTICES AVAILABLE AND IS ONLY SPECIFIC TO THE CONSTRUCTION OF THIS TYPE. MAINTENANCE OF THIS TYPE OF INSTALLATION IS IMPORTANT AND SHOULD BE CONTINUOUSLY MONITORED BY THE CONTRACTOR AND ENGINEER. DETAILS SHOWN HERE HIGHLIGHT IMPORTANT PARTS OF CONSTRUCTION, AND SHOULD BE MODIFIED AS NEEDED.

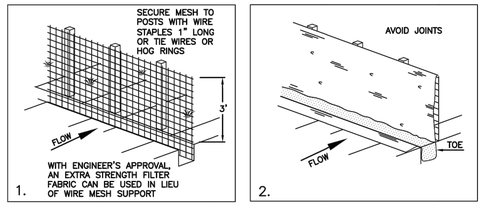

INSTALLATION SEQUENCE

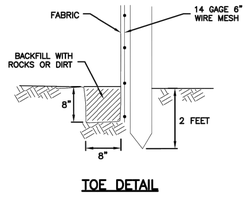

TOE DETAIL

Silt fence

February 2006 7 Plan 122

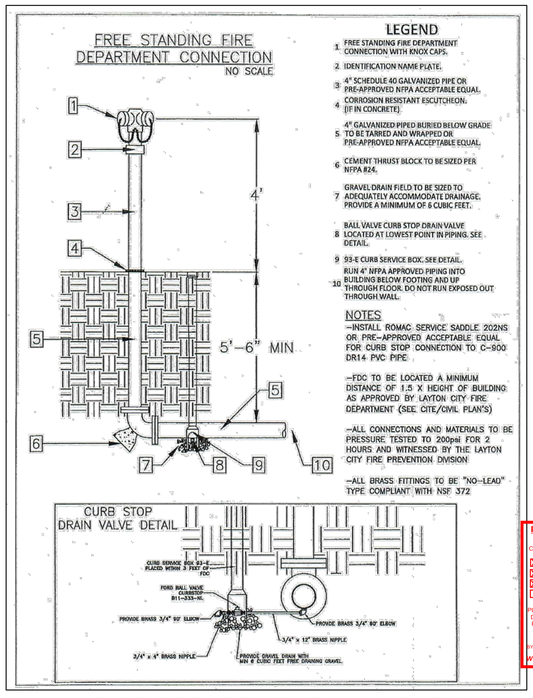

E VAR — FIRE DEPARTMENT CONNECTION
NTS

JOSHB
XREFS:

PLAN REVIEW ACCEPTANCE
FOR COMPLIANCE WITH THE APPLICABLE CONSTRUCTION CODES IDENTIFIED BELOW
☒ BUILDING ☒ STRUCTURAL
☒ MECHANICAL ☒ PLUMBING
☒ ELECTRICAL ☒ ENERGY
☐ ACCESSIBILITY ☐ FIRE
PLAN REVIEW ACCEPTANCE OF DOCUMENTS DOES NOT AUTHORIZE CONSTRUCTION TO PROCEED IN VIOLATION OF ANY FEDERAL, STATE, OR LOCAL REGULATIONS.
BY MEM DATE 08/24/17
WEST COAST CODE CONSULTANTS, INC.

REGISTERED PROFESSIONAL ENGINEER
No. 7899506
RYAN W. CANFIELD
STATE OF UTAH

CALL BEFORE YOU DIG!
BLUE STAKES 1 800 662 4111

NO.	BY	DATE	REVISIONS

CAUTION
The engineer preparing these plans will not be responsible for, or liable for, unauthorized changes to or uses of these plans. All changes to the plans must be in writing and must be approved by the preparer of these plans.

HORIZON NEIGHBORHOOD PRUD
DETAILS

PREPARED FOR: SUMMIT POWDER MOUNTAIN
DATE SUBMITTED: 08.03.2017

TALISMAN CIVIL CONSULTANTS
MURRAY, UT 84107
5217 SOUTH STATE STREET, SUITE 200
801.743.3300 TEL 801.743.0080 FAX

SHEET NUMBER
6.00

SCALE
VERTICAL: 1"= N/A
HORIZONTAL: 1"= N/A

JOB NUMBER
SLB0793

DATE: 8/3/17 TIME: 1:10:05 PM DRAWING NAME: 601 - DETAILS.DWG
SERVER: NONE PAGE SETUP: PDF-C3D-24x36 LAYOUT: Layout1
PATH: N:\SLB0793\CADD\HORIZON VILLAGE\IP DESIGNER: #### PROJ. MGR: ####

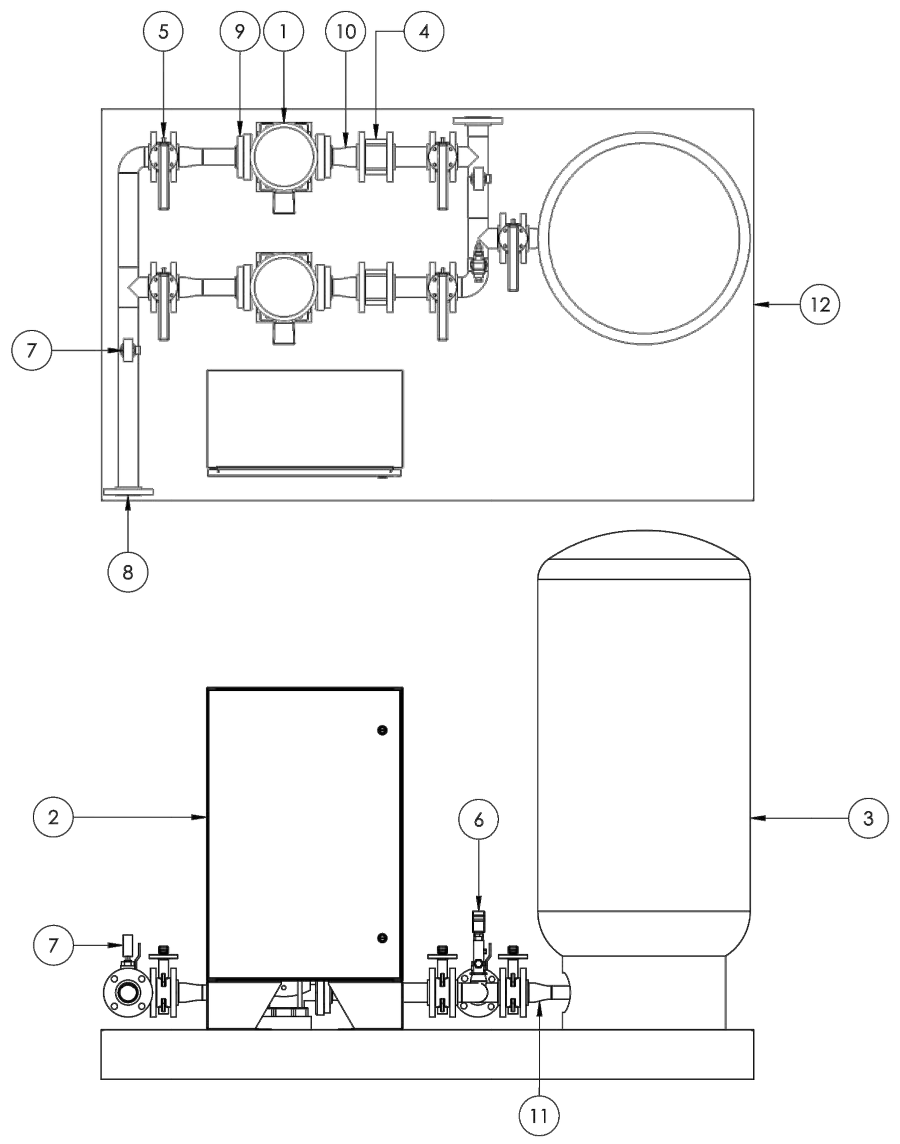

ITEM NO.	DESCRIPTION	QTY.
1	FPS 2HP 3Ph 1.5" Suc./Dis. Pump	2
2	Control Panel Enclosure	1
3	Flint & Walling Air-E-Tainer Well System Tank	1
4	2" Flomatic Wafer Check Valve	2
5	2" Keystone Full Lug Butterfly Valve	5
6	Pressure Transducer and Bleed Block	1
7	Pressure Gauge	2
8	2" Flange	16
9	1.5" Flange	4
10	2" X 1.5" Concentric Reducer	4
11	2" X 1.25" Concentric Reducer	1
12	Pump Skid	1

UNLESS OTHERWISE SPECIFIED: DIMENSIONS ARE IN INCHES TOLERANCES: FRACTIONAL± ANGULAR: MACH± BEND ± TWO PLACE DECIMAL ± THREE PLACE DECIMAL ± INTERPRET GEOMETRIC TOLERANCING PER: MATERIAL FINISH DO NOT SCALE DRAWING

	NAME	DATE
DRAWN	BMH	6/23/2016
CHECKED		
ENG APPR.		
Q.A.		
COMMENTS:		

munro
REV. TITLE: Component List
SIZE B SCALE: 1:14 SHEET 1 OF 2

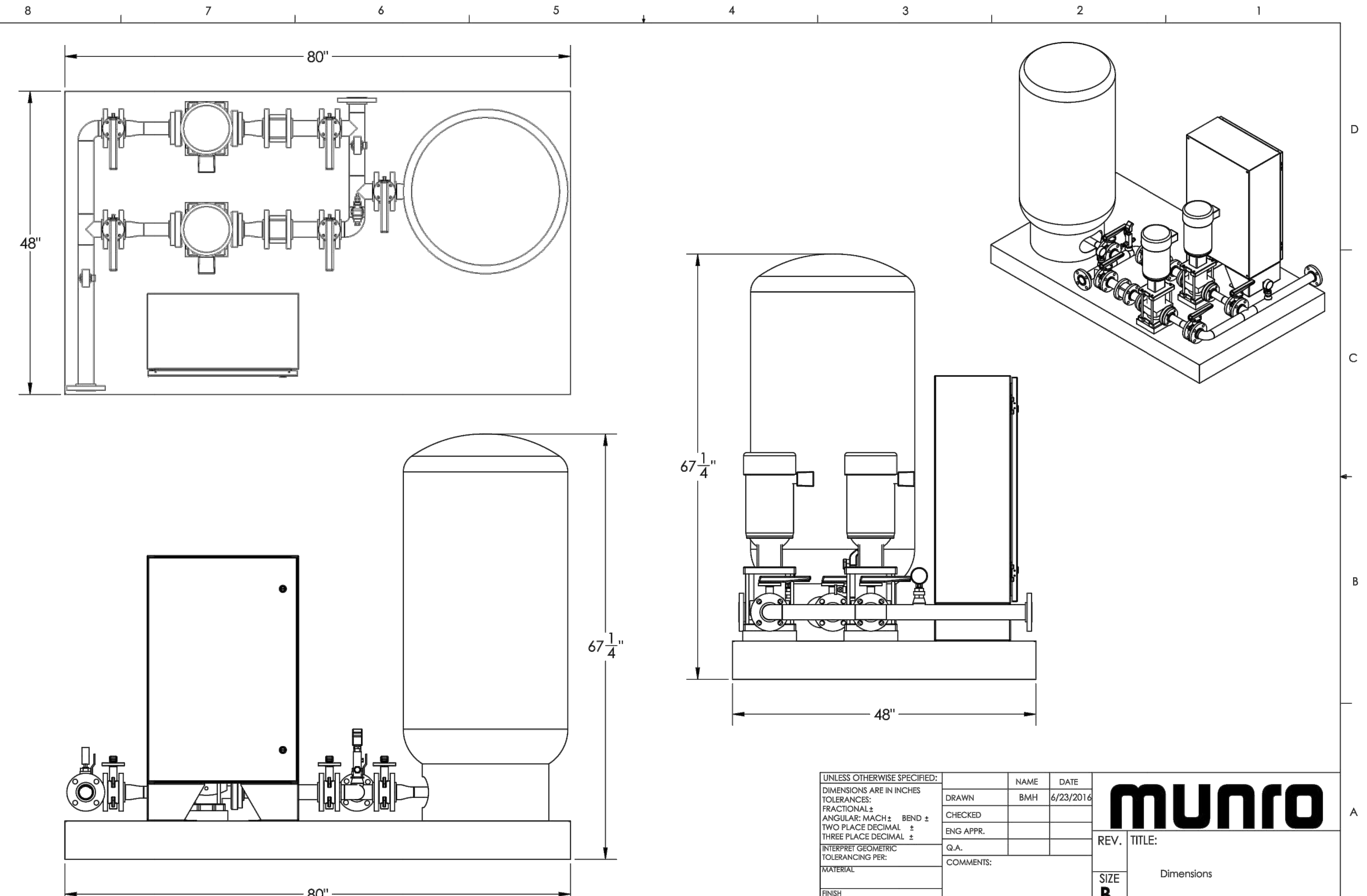

UNLESS OTHERWISE SPECIFIED: DIMENSIONS ARE IN INCHES TOLERANCES: FRACTIONAL± ANGULAR: MACH± BEND ± TWO PLACE DECIMAL ± THREE PLACE DECIMAL ± INTERPRET GEOMETRIC TOLERANCING PER: MATERIAL FINISH DO NOT SCALE DRAWING

	NAME	DATE
DRAWN	BMH	6/23/2016
CHECKED		
ENG APPR.		
Q.A.		
COMMENTS:		

munro
REV. TITLE: Dimensions
SIZE B SCALE: 1:14 SHEET 2 OF 2

Pump Data Sheet - Franklin Electric

Franklin Electric

Company: NV5
Name:
Date: 6/21/2016

Pump:
Size: 5VR 2-8 stage
Type: Multi-Stage Speed: 3450 rpm
Synch Speed: 3600 rpm Line: 5VR-3
Curve: Impeller:
Specific Speeds: Ns: --- Nss: ---
Dimensions: Suction: --- Discharge: ---

Pump Limits:
Temperature: --- Power: ---
Pressure: --- Eye Area: ---
Sphere Size: ---

Search Criteria:
Flow: 30 US gpm Head: 85 ft

Fluid:
Water Temperature: 60 °F
Density: 62.37 lb/ft³ Vapor Pressure: 0.2563 psi a
Viscosity: 1.105 cP Atm Pressure: 14.7 psi a
NPSHa: ---

Motor:
Standard: --- ---
Enclosure: --- Speed: ---
Frame: ---
Sizing Criteria: none specified

---- Duty Point ----
Flow: 33.2 US gpm
Head: 104 ft
Eff: 54%
Power: 1.6 hp
NPSHr: 7.44 ft

---- Design Curve ----
Shutoff Head: 162 ft
Shutoff dP: 70.2 psi
Min Flow: ---
BEP: 56.2% @ 26.3 US gpm
NOL Power: 1.7 hp @ 44 US gpm

-- Max Curve --
Max Power: 4.49 hp @ 44 US gpm

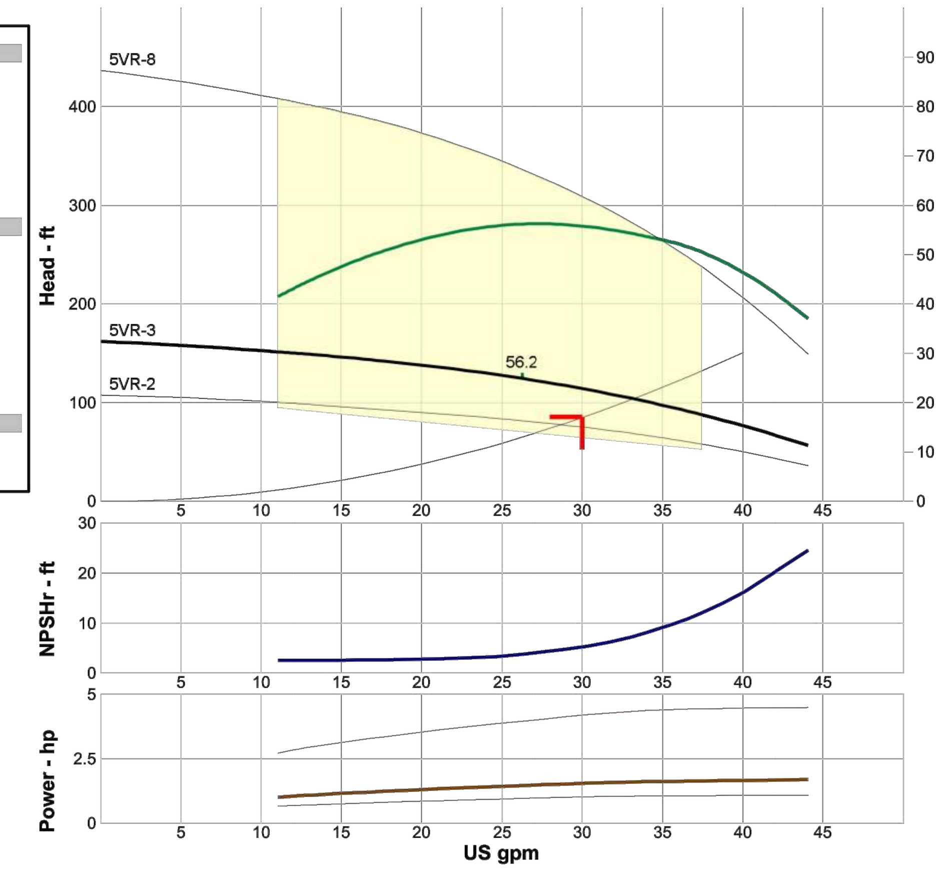

Performance Evaluation:

Flow US gpm	Speed rpm	Head ft	Efficiency %	Power hp	NPSHr ft
36	3450	93.1	52	1.63	10.5
30	3450	113	55	1.54	5.74
24	3450	129	55	1.41	3.52
18	3450	141	51	1.26	2.74
12	3450	150	43	1.05	2.62

Selected from catalog: FECentrifugal.60 Vers: 1.3

MULTI-STAGE PUMPS

VERTICAL VR SERIES

FPS

DIMENSIONS 5VR PUMP END AND MOTOR

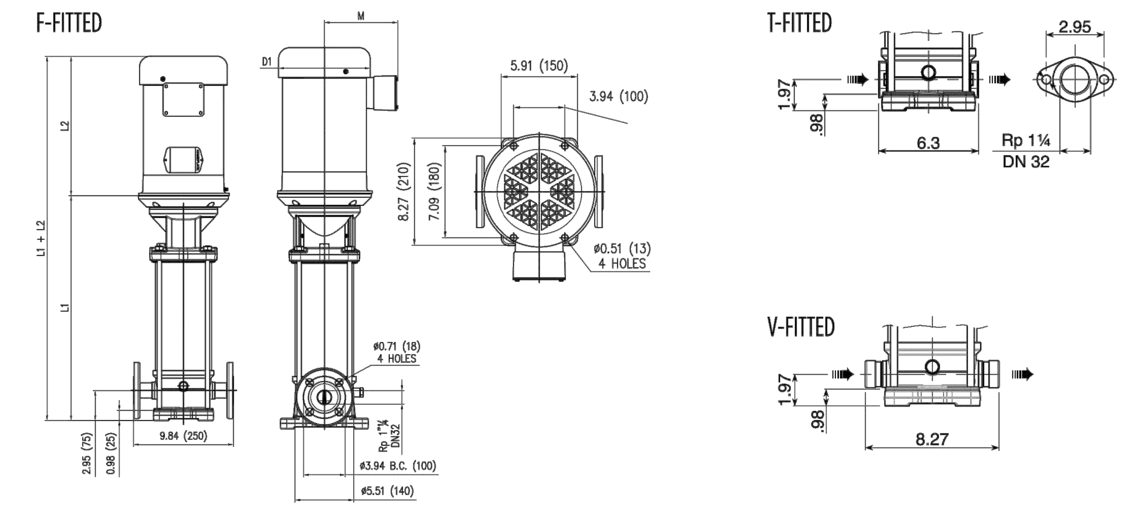

Pump End Dimensions (in)			
Stages	HP	L1 "F"	Model No.
2	1	13.49	5VR2-60 N
3	1.5	14.44	5VR3-60 N
4	2	14.99	5VR4-60 N
5	3	15.93	5VR5-60 N
6	3	17.29	5VR6-60 N
7	5	18.25	5VR7-60 N
8	5	19.19	5VR8-60 N

Pump End Dimensions (in)			
Stages	HP	L1 "F"	Model No.
9	5	20.14	5VR9-60 N
10	5	21.08	5VR10-60 N
11	7.5	21.54	5VR11-60 N
12	7.5	22.48	5VR12-60 N
13	7.5	23.43	5VR13-60 N
14	7.5	24.37	5VR14-60 N
15	7.5	25.31	5VR15-60 N

F-Fitted*: Round flanges on body type PN25—pump is supplied without joints, bolts, and counter flanges.

T-Fitted: Oval flanges on body type PN16—pump is supplied without oval counter flanges for pipe to be screwed, joints, and bolts.

V-Fitted: Connections with rapid fittings type "Victaulic®"—pump is supplied without collars.

Motor Dimensions (in)

Phase	HP	Frame	Standard Efficiency ODP Volts	L2	M	D1	Premium Efficiency ODP Volt	L2	M	D1	Phase	Standard Efficiency TEFC Volts	L2	M	D1	Standard Efficiency TEFC Volt	L2	M	D1
3	1	56C	208-230/460	11.22	5.06	6.19	N/A	N/A	N/A	N/A	3	208-230/460	11.35	5.19	6.19	575	11.35	5.19	6.19
	1.5	56C		12.72	5.06	6.2							11.97	5.19	6.19		11.97	5.19	6.19
	2	56C		13.22	5.06	6.2							12.85	5.19	6.19		12.85	5.19	6.19
	3	56C		13.24	5.62	7.16							13.23	5.74	7.19		13.23	5.74	7.19
	5	182/4TC		16.55	5.61	8.92	208-230/460	13.62	6.75	8.5			16.55	6.87	8.5	N/A	N/A	N/A	N/A
	7.5	182/4TC		16.55	6.87	8.6	208-230/460	15	6.75	8.5			18.05	6.87	8.5				

Phase	HP	Frame	Premium Efficiency TEFC Volt	L2	M	D1	Premium Efficiency TEFC Volts	L2	M	D1	Phase	Standard Efficiency ODP Volts	L2	M	D1	Standard Efficiency TEFC Volt	L2	M	D1
3	1	56C	N/A	N/A	N/A	N/A	N/A	N/A	N/A	N/A	1	115/230	12.72	5.06	6.19	115/230	12.25	5.55	7.19
	1.5	56C											12.73	5.06	6.2		13.25	5.74	7.19
	2	56C											13.24	5.61	7.19		14.12	6.62	7.19
	3	56C										230	12.94	5.73	6.62	230	14.12	5.79	7.19
	5	182/4TC	575	16.55	6.87	8.5	208-230/460	16.55	6.87	8.5		N/A	N/A	N/A	N/A		18.05	6.87	8.6
	7.5	182/4TC	575	18.05	6.87	8.6	208-230/460	18.05	6.87	8.6						N/A	N/A	N/A	N/A

NOTE: Dimensions for round flange units are for estimating purposes only.

25

FLINT & WALLING
Zoeller Family of Water Solutions™

FW0019
0616
Supersedes
0416

AIR-E-TAINER® WELL SYSTEM TANKS

- Inline tanks pre-charged for 30-50 pressure switch - Vertical tanks pre-charged for either 30 - 50 or 40 – 60 Pressure switch
- 100 PSI maximum working pressure
- Powder-coated exterior and interior
- Butyl rubber parabolic diaphragm
- 5 year Limited Warranty

In-line tanks
131009
132477

Vertical Tanks
132661 136875
132662 135460
132663 136876
133517

AIR-E-TAINER® PRE-PRESSURIZED WELL SYSTEM TANKS

Part No.	Total Tank Vol. Gallons	Drawdown - Gallons by PSI Settings*** 20/40	30/50	40/60	Approx. Size In. Dia x Ht	Ship Wt Lbs	NPT Size/ MTL	Factory Precharge PSIG	Max Working Pressure (PSI)	Max Working Temp
131009	2	0.7	0.6		8-1/4 x 10-1/5	5	3/4" M	28	100	140
132477	4.6	1.6	1.4		11 x 14-3/4	9	3/4" M	28	100	140
132661	14	5.2	4.3	3.7	15-3/8 x 24-3/4	25.5	1" F	38	100	200
132662	20	7.4	6.2	5.4	15-3/8 x 32-1/4	30	1" F	38	100	200
132663	36	13.3	11.1	9.7	20 x 38-5/8	45	1" F	38	100	200
133517	52	19.2	16.1	14	23-3/8 x 38-5/8	77	1-1/4" F	38	100	200
136875	65	23.9	20	17.5	23-3/8 x 46-3/5	87	1-1/4" F	38	100	200
135460	86	31.8	26.7	23.2	23-3/8 x 59	105	1-1/4" F	38	100	200
136876	119.5	44	37	32	26 x 61-1/4	165	1-1/4" F	38	100	200

***In keeping with current industry standards, drawdown factors are based on Boyle's law. Actual drawdowns will vary depending upon system variables, including the accuracy and operation of the pressure switch and gauage and operating temperature of the system.

Caution: install a pressure relief valve on any installation where the pump pressure can exceed the tank's maximum working pressure.
NOTE: Precharged tanks cannot ship via air freight.

NOTE: Pre-charged tanks cannot ship via air freight.

AIR-E-TAINER® WELL SYSTEM TANKS

FLINT & WALLING
Zoeller Family of Water Solutions™

Air-E-Tainer® Features

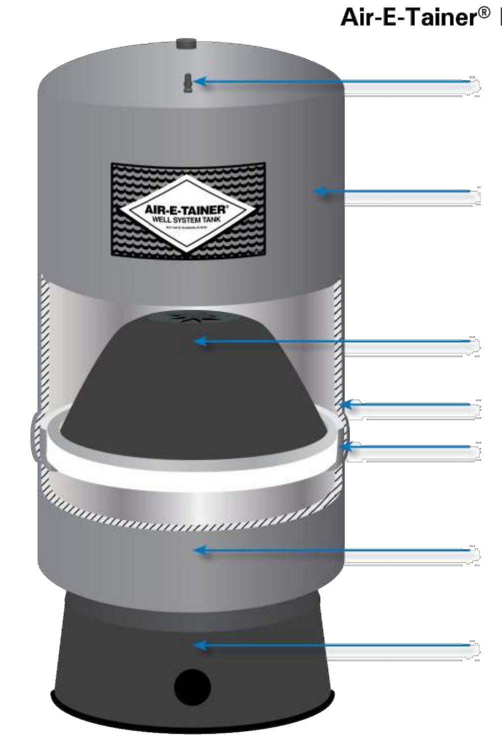

AIR CHARGE VALVE
- Conveniently located for easy pressure adjustment
- Projection-welded for durability

DESIGNER FINISH
- High gloss exterior powder coat
- Provides positive protection against corrosion and UV rays

BUTYL RUBBER PARABOLIC DIAPHRAGM
- Eliminates rubbing on the tank wall or rolling over on itself

STEEL SHELL

STEEL RETAINING RING

POWDER-COATED WATER CHAMBER
- Proven protection against internal corrosion

CORROSION-RESISTANT BASE
- High-impact polymer material
- Strong and stable for long life
- Base rotates for easy alignment to pipe connection
- Slotted and noted for air flow, reduced condensation build-up

Standard 40/60 PSI System

These illustrations show the operation of the Air-E-Tainer® tank in a typical 30/50 pressure range.

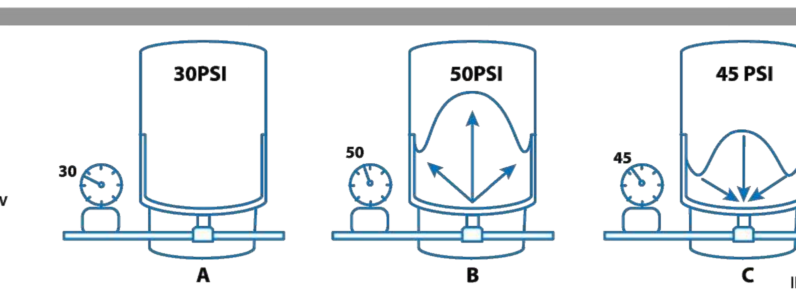

A. Tank is pre-pressurized with air at the factory.

B. When pump starts, water enters the reservoir. At 50 psig, system is filled. Pump shuts off.

C. When water is demanded, pressure in the air chamber forces water into the system. Pump turns on.

D. When pressure in tank drops to pressure switch cut-in point (30 psig) pump refills the tank as in Illustration B.

Flint & Walling | 95 North Oak Street | Kendallville, IN 46755
800-345-9422 | www.flintandwalling.com
2

Copyright © 2016 Flint & Walling

PLAN REVIEW ACCEPTANCE
FOR COMPLIANCE WITH THE APPLICABLE CONSTRUCTION CODES IDENTIFIED BELOW.
☒ BUILDING ☒ STRUCTURAL
☒ MECHANICAL ☒ PLUMBING
☒ ELECTRICAL ☒ ENERGY
☐ ACCESSIBILITY ☐ FIRE
PLAN REVIEW ACCEPTANCE OF DOCUMENTS DOES NOT AUTHORIZE CONSTRUCTION TO PROCEED IN VIOLATION OF ANY FEDERAL, STATE, OR LOCAL REGULATIONS.
BY: MEM DATE: 08/24/17
WEST COAST CODE CONSULTANTS, INC.

CALL BEFORE YOU DIG! IT'S THE LAW BLUE STAKES 1 800 662 4111

REGISTERED PROFESSIONAL ENGINEER No. 7899506 RYAN W. CATHEY 8/3/17 STATE OF UTAH

REVISIONS: NO. BY DATE

CAUTION: The engineer preparing these plans will not be responsible for, or liable for, unauthorized changes to or uses of these plans. All changes to the plans must be in writing and must be approved by the preparer of these plans.

HORIZON NEIGHBORHOOD PRUD

BOOSTER PUMP DETAILS

PREPARED FOR: SUMMIT POWDER MOUNTAIN

DATE SUBMITTED: 08.03.2017

TALISMAN CIVIL CONSULTANTS
5217 SOUTH STATE STREET, SUITE 200 MURRAY, UT 84107
801.743.1300 TEL 801.743.0300 FAX

SHEET NUMBER 6.01

SCALE
VERTICAL: 1"= N/A
HORIZONTAL: 1"= N/A

JOB NUMBER SLB0793

JOSHB
XREFS:

DATE: 8/3/17 TIME: 1:10:33 PM DRAWING NAME: 602 - DETAILS.DWG
SERVER: NONE PAGE SETUP: PDF-c30-24x36 LAYOUT: Layout1
PATH: N:\SLB0793\CADD\HORIZON VILLAGE\ZIP DESIGNER: #### PROJ. MGR: ####

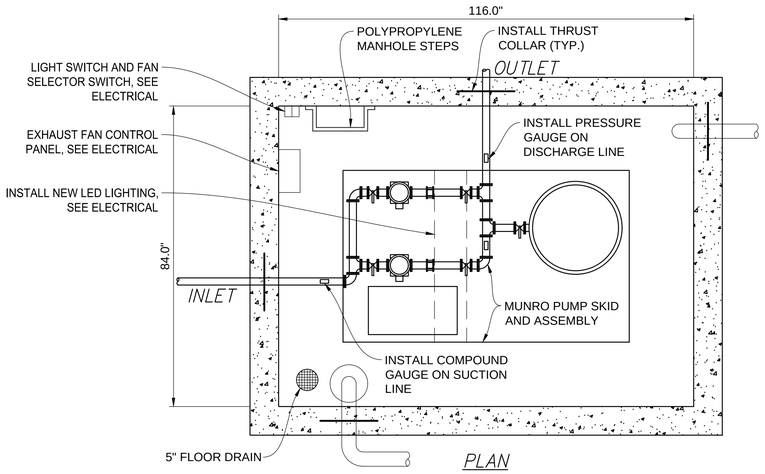

PLAN

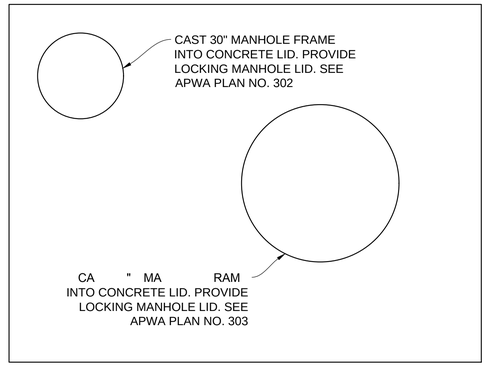

BOX LID

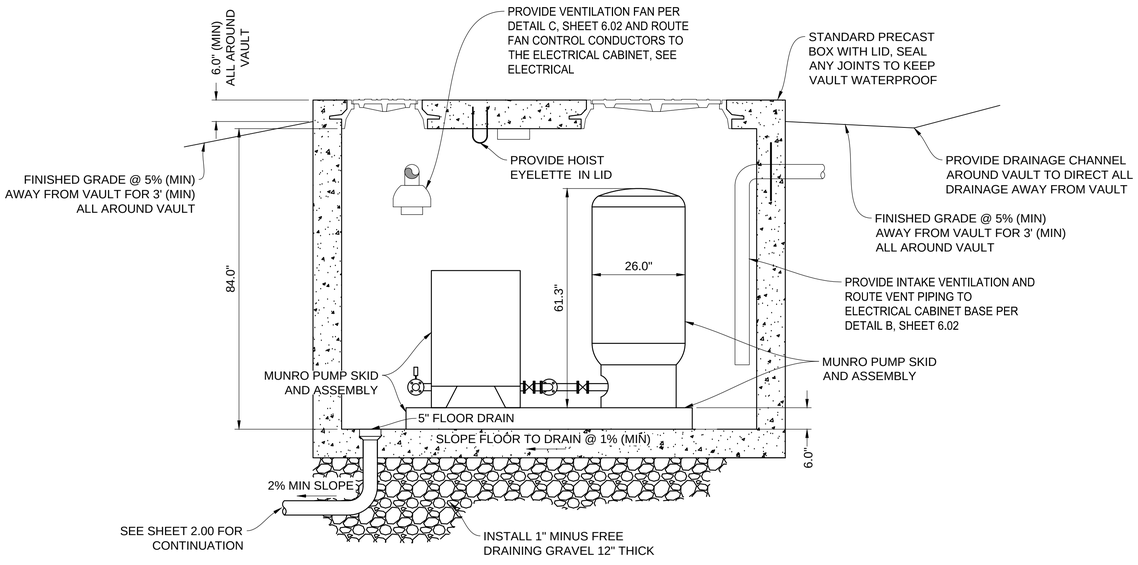

SECTION VIEW

A BOOSTER PUMP VAULT
NOT TO SCALE

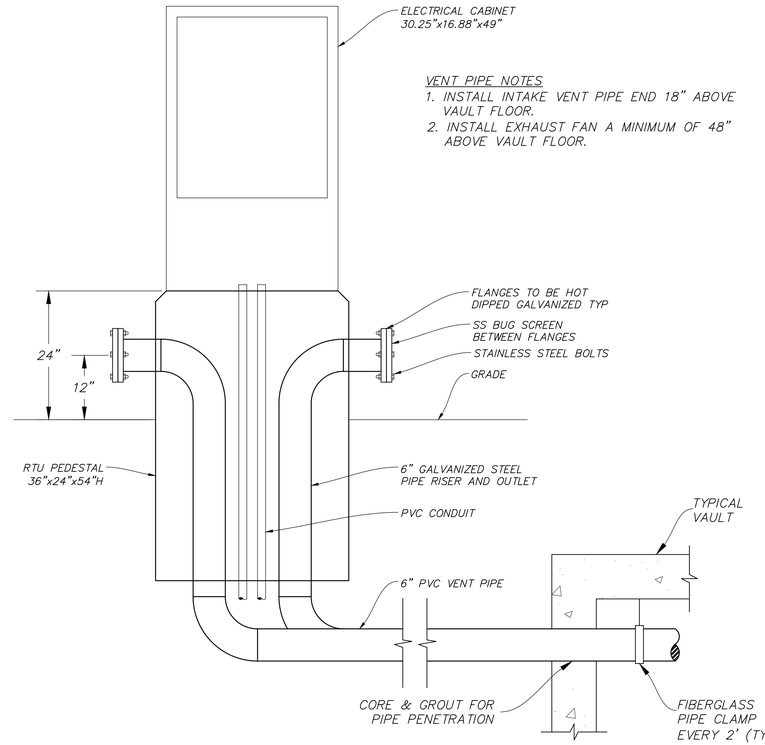

VENT PIPE NOTES
1. INSTALL INTAKE VENT PIPE END 18" ABOVE VAULT FLOOR.
2. INSTALL EXHAUST FAN A MINIMUM OF 48" ABOVE VAULT FLOOR.

B ELECTRICAL PEDESTAL DETAIL
NOT TO SCALE

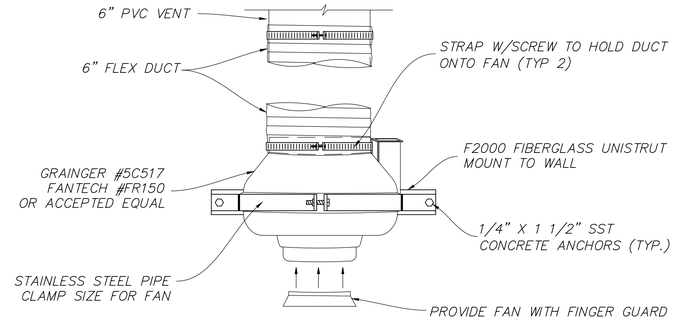

C FAN DETAIL
NOT TO SCALE

PLAN REVIEW ACCEPTANCE
FOR COMPLIANCE WITH THE APPLICABLE CONSTRUCTION CODES IDENTIFIED BELOW.
☒ BUILDING ☒ STRUCTURAL
☒ MECHANICAL ☒ PLUMBING
☒ ELECTRICAL ☒ ENERGY
☐ ACCESSIBILITY ☐ FIRE
PLAN REVIEW ACCEPTANCE OF DOCUMENTS DOES NOT AUTHORIZE CONSTRUCTION TO PROCEED IN VIOLATION OF ANY FEDERAL, STATE, OR LOCAL REGULATIONS.
BY: MEM DATE: 08/24/17
WEST COAST CODE CONSULTANTS, INC.

CALL BEFORE YOU DIG! 811 BLUE STAKES 1 800 662 4111

NO.	BY	DATE	REVISIONS

CAUTION
The engineer preparing these plans will not be responsible for, or liable for, unauthorized changes to or uses of these plans. All changes to the plans must be in writing and must be approved by the preparer of these plans.

HORIZON NEIGHBORHOOD PRUD
BOOSTER PUMP DETAILS

PREPARED FOR: SUMMIT POWDER MOUNTAIN
DATE SUBMITTED: 08.03.2017

TALISMAN CIVIL CONSULTANTS
6317 SOUTH STATE STREET, SUITE 200 MURRAY, UT 84107
801.743.8300 TEL 801.743.8300 FAX

REGISTERED PROFESSIONAL ENGINEER No. 7899506 RYAN W. CATHEY 8/3/17 STATE OF UTAH

SHEET NUMBER
6.02

SCALE
VERTICAL: 1" = N/A
HORIZONTAL: 1" = N/A

JOB NUMBER
SLB0793

JOSHB
XREFS:

DATE: 8/3/17 TIME: 1:10:50 PM DRAWING NAME: 693 - DETAILS.DWG
SERVER: NONE PAGE SETUP: PDF-c30-24x36 LAYOUT: Layout1
PATH: N:\SLB0793\CAD\HORIZON VILLAGE\JP DESIGNER: ### PROJ. MGR: ###

OPTIONS : ☒ DH071 (HARD WIRED LEVEL CONTROLS) ☐ DR071 (WIRELESS LEVEL CONTROLS)

FIELD JOINT REQUIRED FOR MODELS DH071-129 / DR071-129 & DH071-160 / DR071-160

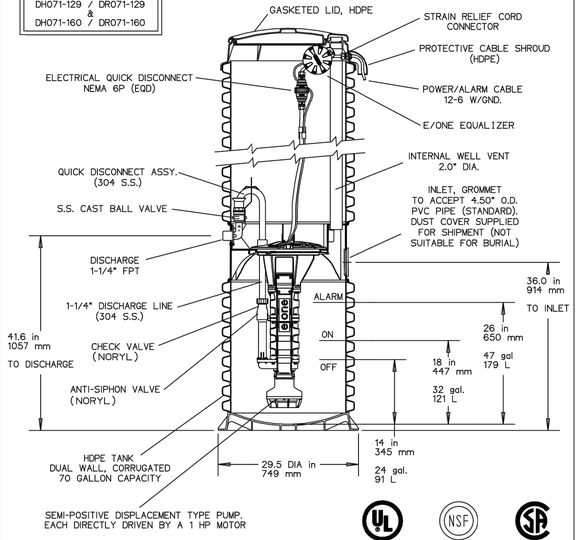

CONCRETE BALLAST MAY BE REQUIRED SEE INSTALLATION INSTRUCTION FOR DETAILS

NOTE: DIMENSIONS ARE FOR REF ONLY

AD	CH	10/20/10	D	
DR BY	CHK'D	DATE	ISSUE	SCALE

e/one SEWER SYSTEMS

MODEL DH071 / DR071 DETAIL SHEET

NA0050P02

OPTIONS : ☒ DH071-124 (HARD WIRED LEVEL CONTROLS) ☐ DR071-124 (WIRELESS LEVEL CONTROLS)

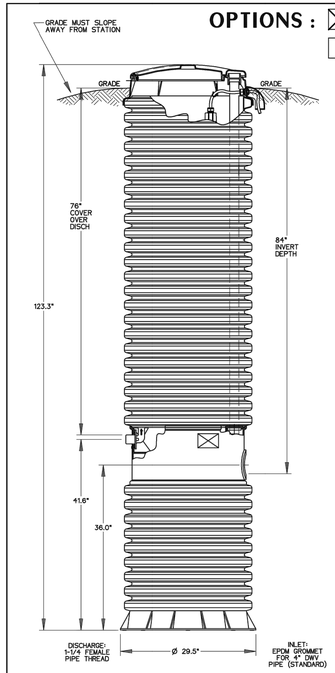

CONCRETE BALLAST MAY BE REQUIRED SEE INSTALLATION INSTRUCTIONS FOR DETAILS

NOTE: DIMENSIONS ARE FOR REF ONLY

AD	CAH	07/13/07	B	1/16
DR BY	CHK'D	DATE	ISSUE	SCALE

e/one SEWER SYSTEMS

MODEL DH071-124 / DR071-124

NA0050P07

E/ONE SPD PUMP PERFORMANCE CURVE

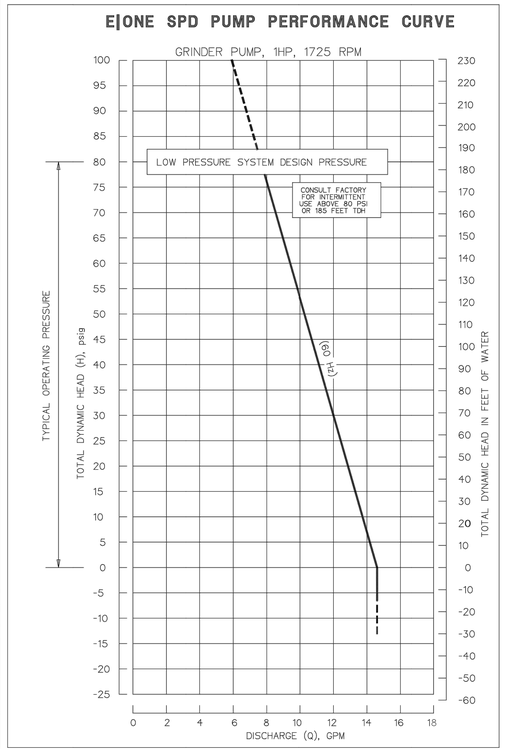

ESD 08-0022 REV. 2, 6/08

OPTIONS : ☒ DH151 (HARD WIRED LEVEL CONTROLS) ☐ DR151 (WIRELESS LEVEL CONTROLS)

FIELD JOINT REQUIRED FOR MODELS DH151-129 / DR151-129 & DH151-160 / DR151-160

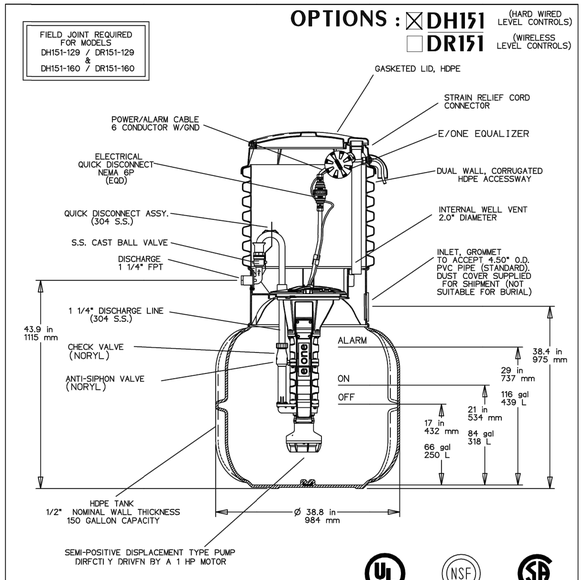

CONCRETE BALLAST MAY BE REQUIRED SEE INSTALLATION INSTRUCTIONS FOR DETAILS

NOTE: DIMENSIONS ARE FOR REFERENCE ONLY

AD	CH	10/20/10	D	
DR BY	CHK'D	DATE	ISSUE	SCALE

e/one SEWER SYSTEMS

MODEL DH151 / DR151 DETAIL SHEET

NA0051P02

OPTIONS : ☒ DH151-129 (HARD WIRED LEVEL CONTROLS) ☐ DR151-129 (WIRELESS LEVEL CONTROLS)

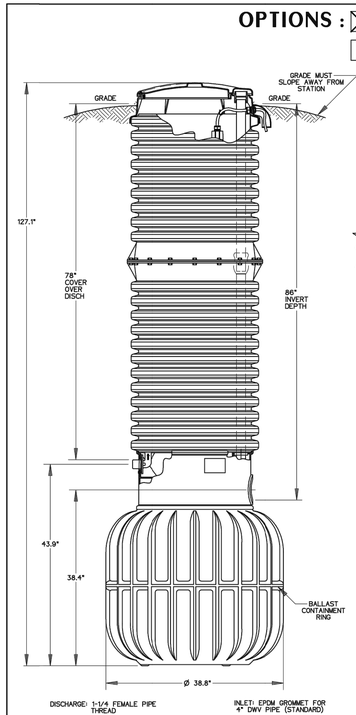

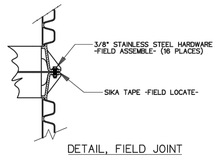

DETAIL, FIELD JOINT

SEE INSTALLATION INSTRUCTIONS FOR FURTHER DETAILS

CONCRETE BALLAST MAY BE REQUIRED SEE INSTALLATION INSTRUCTIONS FOR DETAILS

NOTE: DIMENSIONS ARE FOR REFERENCE ONLY

AD	CAH	07/13/07	C	1/16
DR BY	CHK'D	DATE	ISSUE	SCALE

e/one SEWER SYSTEMS

MODEL DH151-129 / DR151-129

NA0051P07

SIMPLEX SENTRY

REDUNDANT RUN (HIGH LEVEL)
EXTERNAL VISUAL & AUDIBLE ALARM
EXTERNAL LATCHING MANUAL SILENCE
MANUAL RUN
PUMP RUN INDICATOR
CONFORMAL COATED CIRCUIT BOARD
PADLOCK
NEMA 4X ENCLOSURE ASSEMBLY
CORROSION PROOF THERMOPLASTIC POLYESTER APPROVED BY UL FOR ELECTRICAL CONTROL ENCLOSURE

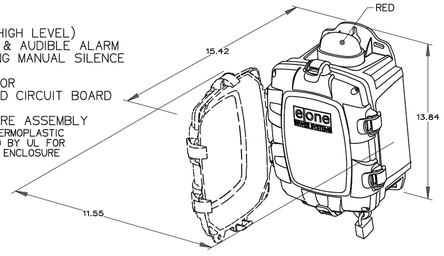

OPTIONS:
- ☐ ALARM CONTACTS
- ☐ HOUR METER

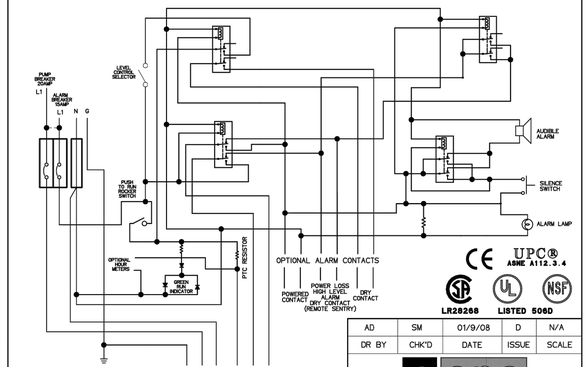

PIN	FUNCTION	2000S	EXTREME
1	MANUAL RUN	RED	BROWN
2	L1	BLACK	RED
3	N	WHITE	BLACK
4	GND	GREEN	GRN/YEL
5	ALARM FEED	ORANGE	YELLOW
6	ALARM RETURN	BLUE	BLUE

CONTROL CABLE:
TYPE TC: DIRECT BURIAL, 12AWG, SIX CONDUCTOR

CE UPC® ASME A112.3.4
LR28288 LISTED 506D

AD	SM	01/9/08	D	N/A
DR BY	CHK'D	DATE	ISSUE	SCALE

e/one SEWER SYSTEMS

SIMPLEX SENTRY, 120V 60Hz. SINGLE POLE POWER

LM000327

NO.	BY	DATE	REVISIONS

CALITION

The engineer preparing these plans will not be responsible for, or liable for, unauthorized changes to or uses of these plans. All changes to the plans must be in writing and must be approved by the preparer of these plans.

HORIZON NEIGHBORHOOD PRUD

SEWER EJECTOR DETAILS

PREPARED FOR: SUMMIT POWDER MOUNTAIN

DATE SUBMITTED: 08.03.2017

TALISMAN CIVIL CONSULTANTS
6317 SOUTH 1ST.ATE STREET, SUITE 200 MURRAY, UT 84107
801.743.1500 TEL 801.743.0000 FAX

PLAN REVIEW ACCEPTANCE

FOR COMPLIANCE WITH THE APPLICABLE CONSTRUCTION CODES IDENTIFIED BELOW.

- ☒ BUILDING
- ☒ MECHANICAL
- ☒ ELECTRICAL
- ☐ ACCESSIBILITY
- ☒ STRUCTURAL
- ☒ PLUMBING
- ☒ ENERGY
- ☐ FIRE

PLAN REVIEW ACCEPTANCE OF DOCUMENTS DOES NOT AUTHORIZE CONSTRUCTION TO PROCEED IN VIOLATION OF ANY FEDERAL, STATE, OR LOCAL REGULATIONS.

BY MEM DATE 08/24/17

WEST COAST CODE CONSULTANTS, INC.

REGISTERED PROFESSIONAL ENGINEER No. 7899506 RYAN W. CATHEY 8-31-17 STATE OF UTAH

CALL BEFORE YOU DIG! IT'S THE LAW! BLUE STAKES 1 800 662 4111

SHEET NUMBER 6.03

SCALE VERTICAL: 1"= N/A HORIZONTAL: 1"= N/A

JOB NUMBER SLB0793

JOSHB XREFS:

DATE: 8/3/17 TIME: 1:11:12 PM DRAWING NAME: 604 - DETAILS.DWG
SERVER: NONE PAGE SETUP: PDF_c3D-24x36 LAYOUT: Layout1
PATH: N:\SLB0793\CADD\HORIZON VILLAGE\JP DESIGNER: ### PROJ. MGR: ###

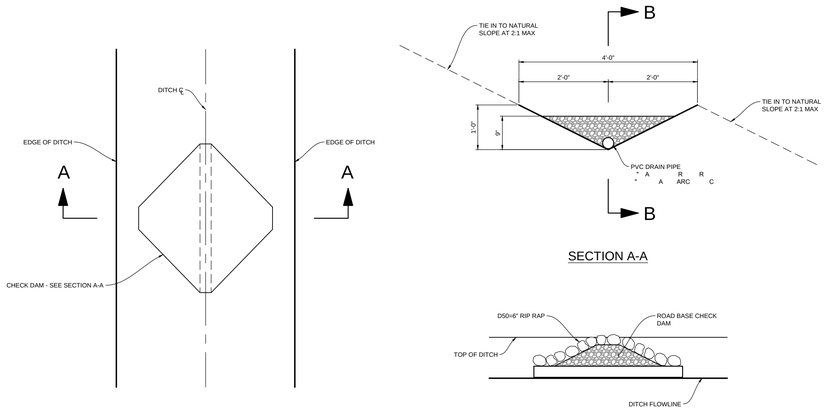

PLAN VIEW

SECTION A-A

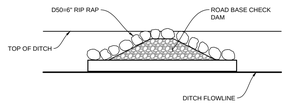

SECTION B-B

CHECK DAM DETAIL

A / VAR — NTS

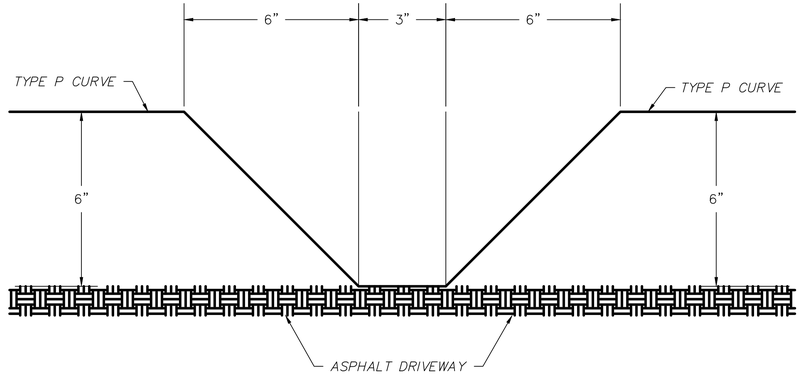

CURB CUT DETAIL

B / 604 — NTS

Curb and gutter connection

1. **GENERAL**
   A. Connect new curb and gutter to existing curb and gutter that has not been placed by CONTRACTOR.

2. **PRODUCTS**
   A. Reinforcement: Galvanized or epoxy coated, 60 ksi yield grade steel, ASTM A 615.
   B. Adhesive: Epoxy adhesive grout, APWA Section 03 61 00.
   C. Bond Breaker: Paraffin wax, lithium grease, or other semi-solid, inert lubricant.
   D. Expansion Cap: Plastic, with bar movement allowance of 1/2-inch.

3. **EXECUTION**
   A. Ensure drill rigs (or jigs) are set at mid-depth of the gutter and horizontal to the surface. Make hole size large enough to account for dowel bar and adhesive.
   B. Clean holes and dowel bars of dirt, dust and particles. Ensure coating on bars have no surface defects.
   C. Place bonding agent in the back of each hole so adhesive flows out around each bar fully encasing it. DO NOT apply adhesive to end of the bar and then insert the bar into the hole.
   D. Insert dowels with at least one full turning motion and if necessary, place a grout retention disk on the dowel after insertion to contain adhesive.
   E. Apply complete coverage of bond-breaker on the protruding end of each dowel.
   F. Install expansion caps on protruding dowel bar ends.

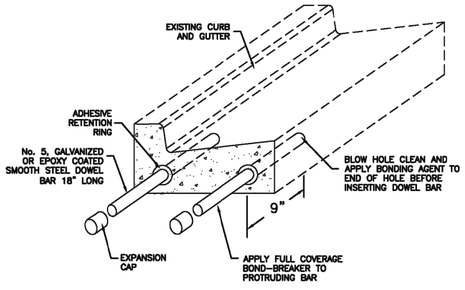

Curb and gutter connection

35 1/2" Grate and frame

1. **GENERAL**
   A. The grate and frame fits concrete boxes in Plan 315.

2. **PRODUCTS**
   A. Castings: Grey iron class 35 minimum per ASTM A 48, coated with asphalt based paint or better.
   B. Bolts, Nuts, Washers, Accessories: Stainless steel, APWA Section 05 05 23.

3. **EXECUTION** (Not used)

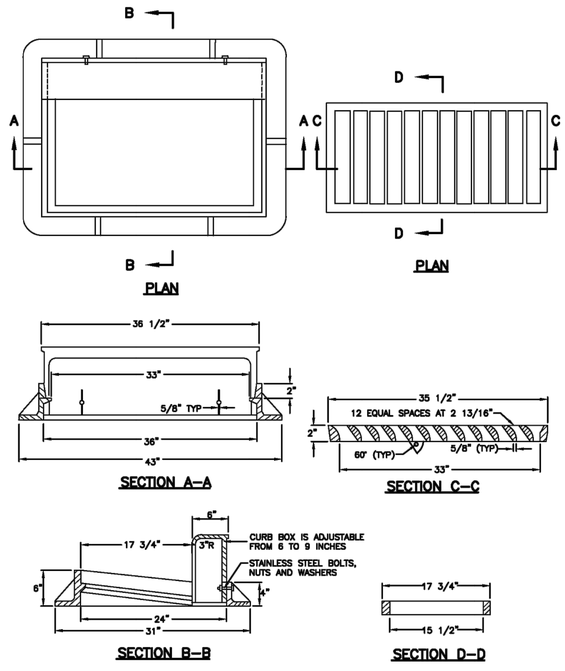

35 1/2" Grate and frame

PLAN REVIEW ACCEPTANCE
FOR COMPLIANCE WITH THE APPLICABLE CONSTRUCTION CODES IDENTIFIED BELOW.
☒ BUILDING ☒ STRUCTURAL
☒ MECHANICAL ☒ PLUMBING
☒ ELECTRICAL ☒ ENERGY
☐ ACCESSIBILITY ☐ FIRE
PLAN REVIEW ACCEPTANCE OF DOCUMENTS DOES NOT AUTHORIZE CONSTRUCTION TO PROCEED IN VIOLATION OF ANY FEDERAL, STATE, OR LOCAL REGULATIONS.
BY MEM DATE 08/24/17
WEST COAST CODE CONSULTANTS, INC.

CALL BEFORE YOU DIG! IT'S THE LAW! BLUE STAKES 1 800 662 4111

NO.	BY	DATE	REVISIONS

CAUTION
The engineer preparing these plans will not be responsible for, or liable for, unauthorized changes to or uses of these plans. All changes to the plans must be in writing and must be approved by the preparer of these plans.

HORIZON NEIGHBORHOOD PRUD

DETAILS

PREPARED FOR: SUMMIT POWDER MOUNTAIN

DATE SUBMITTED: 08.03.2017

TALISMAN CIVIL CONSULTANTS
6317 SOUTH ST4TE STREET, SUITE 200 MURRAY, UT 84107
801.743.1500 TEL 801.743.0300 FAX

REGISTERED PROFESSIONAL ENGINEER No. 7899506 RYAN W. CATHEY 8/3/17 STATE OF UTAH

SHEET NUMBER 6.04

SCALE VERTICAL: 1" = N/A HORIZONTAL: 1" = N/A

JOB NUMBER SLB0793

JOSHB XREFS:

DATE: 8/3/17 TIME: 1:11:23 PM DRAWING NAME: 605 - DETAILS.DWG
SERVER: NONE PAGE SETUP: PDF-c3D-24x36 LAYOUT: Layout1
PATH: N:\SLB0793\CADD\HORIZON VILLAGE.DP DESIGNER: ### PROJ. MGR: ###

Catch basin

1. GENERAL
A. The drawing shows typical pipe connections. Refer to construction drawings for connection locations or refer to field location of existing piping when engineering pipe connection to the box.

2. PRODUCTS
A. Base Course: Untreated base course, APWA Section 32 11 23. Do not use gravel as a base course without ENGINEER's permission.
B. Backfill: Common fill, APWA Section 31 05 13. Maximum particle size 2-inches.
C. Concrete: Class 4000, APWA Section 03 30 04.
D. Reinforcement: Deformed, 60 ksi yield grade steel, ASTM A 615.

3. EXECUTION
A. Base Course Placement: APWA Section 32 11 23. Maximum lift thickness is 8-inches before compaction. Compaction is 95 percent or greater relative to a modified proctor density, APWA Section 31 23 26.
B. Curb Face Opening: Make opening at least 4-inches high. Provide at least a 2-inch drop between the "warp line" in the gutter flow-line and the top of the grate at the curb face opening.
C. Concrete Placement: APWA Section 03 30 10. Provide 1/2-inch radius edges. Apply a broom finish. Apply a curing agent.
D. Backfill: Place backfill against the basin wall. Pea gravel and recycled RAP aggregate is NOT ALLOWED. Water jetting is NOT allowed. Maximum lift thickness is 8-inches before compaction. Compaction is 95 percent or greater relative to a standard proctor density, APWA Section 31 23 26.

Pipe outfall

1. GENERAL
A. Round concrete pipe application.
B. Additional requirements are specified in APWA Section 33 05 02.

2. PRODUCTS
A. Use the same quality of precast end section as the pipe.
B. Use the joint material and connection that is the same as the joints in the pipeline.

3. EXECUTION
A. General dimensions and geometric shapes may vary from manufacturer to manufacturer.
B. Steel reinforcement is not required in the concrete end section shown.
C. Provide joint restraint connectors if required by ENGINEER.

Trench backfill

1. GENERAL
A. The drawing applies to backfilling the trench above the pipe zone.

2. PRODUCTS
A. Backfill: Common fill, APWA Section 31 05 13. Maximum particle size 3-inches.
B. Flowable Fill: Target is 60 psi in 28 days with 90 psi maximum in 28 days, APWA Section 31 05 15. It must flow easily requiring no vibration for consolidation.

3. EXECUTION
A. Trench Backfill:
1) DO NOT USE sewer rock, pea gravel, or recycled RAP aggregate as trench backfill.
2) Maximum lift thickness is 8-inches before compaction. Compaction is 95 percent or greater relative to a standard proctor density, APWA Section 31 23 26.
3) Water jetting is NOT allowed.
4) Submission of quality control compaction test result data developed for haunching areas may be requested by ENGINEER at any time. Provide results of tests immediately upon request.
B. Flowable Fill: When required, place controlled low strength material in the trench, APWA Section 31 05 15. Cure the fill before placing surface restorations.
C. Surface Restoration:
1) Landscaped Surface: Rake to match existing grade. Replace vegetation to match pre-construction conditions. Follow APWA Section 32 92 00 (turf or grass) or APWA Section 32 93 13 (ground cover) requirements.
2) Paved Surface: Do not install asphalt or concrete surfacing until trench compaction is acceptable to ENGINEER. Follow APWA Section 33 05 25 (asphalt surfacing), or APWA Section 33 05 25 (concrete surfacing).

SINGLE GRATE

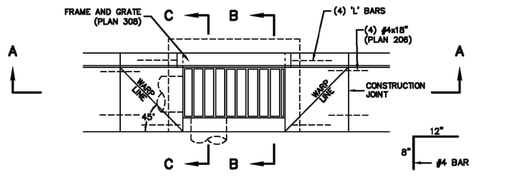

PLAN

"L" BAR DETAIL

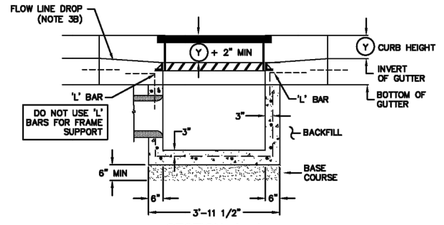

SECTION A–A

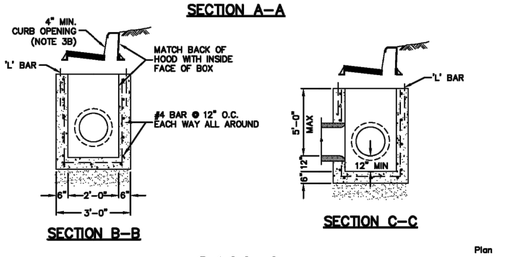

SECTION B–B

SECTION C–C

ROUND WITH FLARE

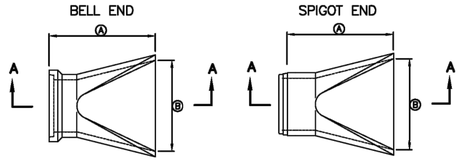

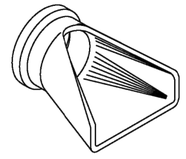

OBLIQUE

TABLE OF DIMENSION		
PIPE SIZE SIZE	DIMENSION A	DIMENSION B
18"	73"	36"
24"	73"	48"
30"	73"	60"
36"	97"	72"
42"	98"	78"
48"	98"	84"

NOTE: MINIMUM DIMENSIONS ARE SHOWN. ACTUAL SIZES MAY BE SLIGHTLY LARGER

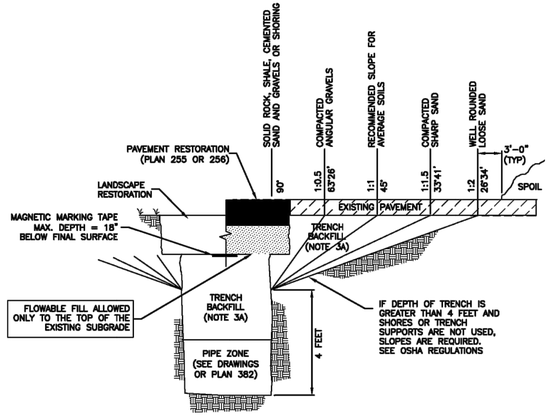

PLAN REVIEW ACCEPTANCE
FOR COMPLIANCE WITH THE APPLICABLE CONSTRUCTION CODES IDENTIFIED BELOW.
☒ BUILDING ☒ STRUCTURAL
☒ MECHANICAL ☒ PLUMBING
☒ ELECTRICAL ☒ ENERGY
☐ ACCESSIBILITY ☐ FIRE
PLAN REVIEW ACCEPTANCE OF DOCUMENTS DOES NOT AUTHORIZE CONSTRUCTION TO PROCEED IN VIOLATION OF ANY FEDERAL, STATE, OR LOCAL REGULATIONS.
BY MEM DATE 08/24/17
WEST COAST CODE CONSULTANTS, INC.

NO.	BY	DATE	REVISIONS

CAUTION

The engineer preparing these plans will not be responsible for, or liable for, unauthorized changes to or uses of these plans. All changes to the plans must be in writing and must be approved by the preparer of these plans.

HORIZON NEIGHBORHOOD PRUD

DETAILS

PREPARED FOR: SUMMIT POWDER MOUNTAIN

DATE SUBMITTED: 08.03.2017

TALISMAN CIVIL CONSULTANTS
6317 SOUTH 900 EAST, SUITE 200 MURRAY, UT 84107
801.743.1500 TEL 801.743.0000 FAX

REGISTERED PROFESSIONAL ENGINEER
No. 7899506
RYAN W. CATHEY
STATE OF UTAH

SHEET NUMBER
6.05

SCALE
VERTICAL: 1" = N/A
HORIZONTAL: 1" = N/A

JOB NUMBER
SLB0793

JOSHB
XREFS:

DATE: 8/3/17 TIME: 1:11:53 PM DRAWING NAME: 606 - DETAILS.DWG
SERVER: NONE PAGE SETUP: PDF-C3D-24x36 LAYOUT: Layout1
PATH: N:\SLB0793\CADD\HORIZON VILLAGE\JP XREFS: ### PROJ. MGR: ###

Pipe zone backfill

1. GENERAL
A. Install the pipe in the center of the trench or no closer than 6-inches from the wall of the pipe to the wall of the trench.

2. PRODUCTS
A. Base Course: Untreated base course, APWA Section 32 11 23. Do not use gravel as a base course without ENGINEER's permission.
B. Backfill: Common fill, APWA Section 31 05 13. Maximum particle size 2-inches.
C. Concrete: APWA Section 03 30 04.
D. Flowable Fill: Target is 60 psi in 28 days with 90 psi maximum in 28 days, APWA Section 31 05 15. It must flow easily requiring no vibration for consolidation.
E. Stabilization-Separation Geotextile: Moderate or high at CONTRACTOR's choice, APWA Section 31 05 19.

3. EXECUTION
A. Excavate the Pipe Zone: Width is measured at the pipe spring line and includes any necessary sheathing. Provide width recommended by pipe manufacturer. Follow manufacturer's recommendations when using trench boxes.
B. Foundation Stabilization: Get ENGINEER's permission before installing common fill. Vibrate to stabilize. Installation of stabilization-separation geotextile will be required to separate backfill material and native subgrade materials if common fill cannot provide a working surface or prevent soils migration.
C. Base Course:
1) Furnish untreated base course material unless specified otherwise by pipe manufacturer.
2) Maximum lift thickness is 8-inches before compaction. Compaction is 95 percent or greater relative to a modified proctor density, APWA Section 31 23 26.
3) When using concrete, provide at least Class 2,000 per APWA Section 03 30 04.
D. Pipe Zone: DO NOT USE sewer rock, pea gravel, or recycled RAP aggregate in the pipe zone. Water jetting is NOT allowed.
1) Maximum lift thickness is 8-inches before compaction. Compaction is 95 percent or greater relative to a modified proctor density, APWA Section 31 23 26 unless pipe manufacturer requires more stringent installation.
2) Submission of quality control compaction test result data developed for the haunch zone may be requested by ENGINEER at any time. CONTRACTOR is to provide results of tests immediately upon request.
E. Flowable Fill (when required and if allowed by pipe manufacturer):
1) Place the controlled low strength material, APWA Section 31 05 15.
2) Prevent pipe flotation by installing in lifts and providing pipe restraints as required by pipe manufacturer.
3) Reset pipe to line and grade if pipe "floats" out of position.

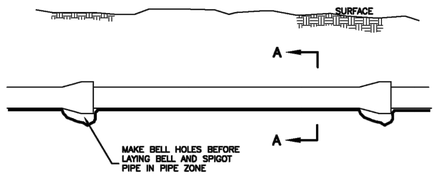

ELEVATION VIEW

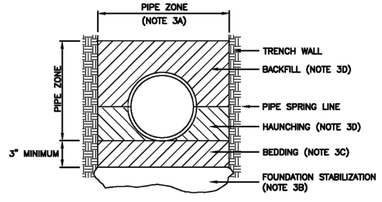

SECTION A–A

INSTALLATION

CONCRETE PIPE: FOLLOW ASTM C 1479
"STANDARD PRACTICE FOR INSTALLATION OF PRECAST CONCRETE SEWER, STORM DRAIN, AND CULVERT PIPE USING STANDARD INSTALLATIONS."

PVC AND HDPE PIPE: FOLLOW ASTM D 2321
"STANDARD PRACTICE FOR UNDERGROUND INSTALLATION OF THERMOPLASTIC PIPE FOR SEWERS AND OTHER GRAVITY-FLOW APPLICATIONS"

CORRUGATED METAL PIPE: FOLLOW ASTM A 798
"STANDARD PRACTICE FOR INSTALLING FACTORY-MADE CORRUGATED STEEL PIPE FOR SEWERS AND OTHER APPLICATIONS."

VITRIFIED CLAY PIPE: FOLLOW ASTM C 12.
"STANDARD RECOMMENDED PRACTICE FOR INSTALLING VITRIFIED CLAY PIPE LINES."

4" washout valve

1. GENERAL
A. Before backfilling, secure inspection of installation by ENGINEER.
B. Water mains 12-inches and larger will require a special washout assembly design.

2. PRODUCTS
A. Base Course: Untreated base course, APWA Section 32 11 23. Do not use gravel as a base course without ENGINEER's permission.
B. Backfill: Common fill, APWA Section 31 05 13. Maximum particle size 2-inches.
C. Concrete: Class 4000, APWA Section 03 30 04.

3. EXECUTION
A. Pour concrete against undisturbed soil.
B. Apply tape wrap to the exterior of all galvanized pipe per AWWA C209.
C. Place plastic sheet at least 6 mils thick over drain gravel to prevent silting.
D. After installation of washout valve assembly, verify the washout valve riser drains to gravel.
E. Backfill and Base Course Placement: Maximum lift thickness is 8-inches before compaction. Compaction is 95 percent or greater of a modified proctor density, APWA Section 31 23 26.

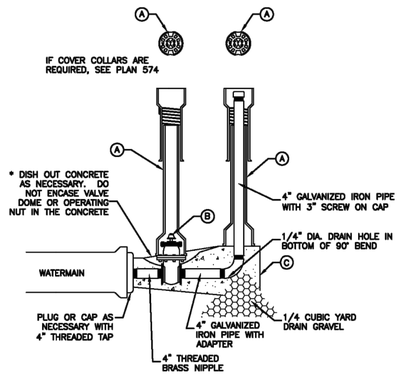

LEGEND		
No.	ITEM	DESCRIPTION
A	VALVE BOX WITH LID	2 PIECE CAST IRON
B	4" GATE VALVE WITH SCREW ENDS	2" x 2" OPERATING NUT
C	CONCRETE THRUST BLOCK	PLAN 561

Air release assembly

1. GENERAL
A. This drawing detail is applicable to water main piping less than 16-inches diameter.
B. PCCP, steel, MLAC and other water main pipe materials will require special detail or design drawings. Submit the design and detail drawings and materials to the ENGINEER for review before installation.
C. Installation in areas of high ground water or potential for water entering the vent pipe will require a special design to be provided by the ENGINEER.
D. Before backfilling around the assembly, secure inspection of installation by ENGINEER.

2. PRODUCTS
A. Base Course: Untreated base course, APWA Section 32 11 23. Do not use gravel as a base course without ENGINEER's permission.
B. Drain Gravel: Sewer rock, ASTM size no. 3 (2" to 1") or equal, APWA Section 31 05 13.
C. Backfill: Common fill, APWA Section 31 05 13. Maximum particle size 2-inches.
D. Concrete: Class 4000, APWA Section 03 30 04.
E. Manhole: Riser, ASTM C 478.
F. Reinforcement: Deformed, steel, ASTM A 615. Give bars an epoxy coating at least 15 mils thick. Minimum stress yield strength of steel tie-down bars is 70,000 ksi.
G. Small Fittings: Brass. Do not use galvanized materials.
H. PVC Pipe and Fittings: Schedule 40, APWA Section 33 05 07.
I. Water Tight Wall Seal: Waterproof, compressible.

3. EXECUTION
A. Base Course and Backfill Placement: Maximum lift thickness is 8-inches before compaction. Compaction is 95 percent or greater relative to a modified proctor density, APWA Section 31 23 26.
B. Apply tape wrap to the exterior of all buried steel pipe per AWWA C209.
C. Concrete Placement: APWA Section 03 30 10. Provide 1/2-inch radius edges. Apply a broom finish. Apply a curing agent.
D. Service saddle is required on all PVC and AC pipe taps unless specified otherwise. Ductile iron and cast iron pipe may be direct tapped.
E. Seal manhole joints water-tight and ground flush with interior wall.
F. Follow applicable AWWA and NSF standards when connecting piping.
G. If diameter of air relief valve is greater than 2-inches, provide piping to match its diameter from water main connection to open to air.

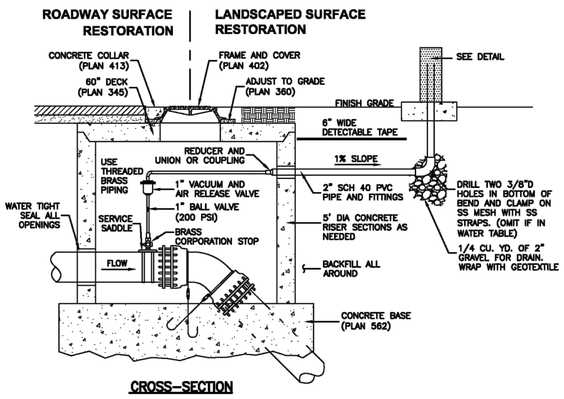

CROSS–SECTION

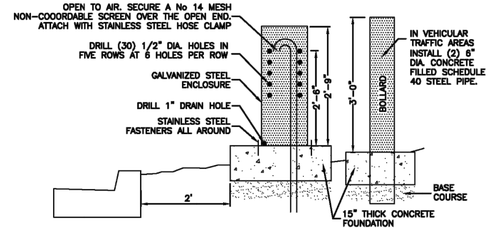

DETAIL

NO.	BY	DATE	REVISIONS

CAUTION
The engineer preparing these plans will not be responsible for, or liable for, unauthorized changes to or uses of these plans. All changes to the plans must be in writing and must be approved by the preparer of these plans.

HORIZON NEIGHBORHOOD PRUD

DETAILS

PREPARED FOR: SUMMIT POWDER MOUNTAIN

DATE SUBMITTED: 08.03.2017

TALISMAN CIVIL CONSULTANTS
6217 SOUTH 974TE STREET, SUITE 200 MURRAY, UT 84107
801.743.1500 TEL 801.743.0500 FAX

PLAN REVIEW ACCEPTANCE
FOR COMPLIANCE WITH THE APPLICABLE CONSTRUCTION CODES IDENTIFIED BELOW.
☒BUILDING ☒STRUCTURAL
☒MECHANICAL ☒PLUMBING
☒ELECTRICAL ☒ENERGY
☐ACCESSIBILITY ☐FIRE
PLAN REVIEW ACCEPTANCE OF DOCUMENTS DOES NOT AUTHORIZE CONSTRUCTION TO PROCEED IN VIOLATION OF ANY FEDERAL, STATE, OR LOCAL REGULATIONS.
BY MEM DATE 08/24/17
WEST COAST CODE CONSULTANTS, INC.

REGISTERED PROFESSIONAL ENGINEER No. 7899506 RYAN W. CATHEY 8/3/17 STATE OF UTAH

SHEET NUMBER 6.06

SCALE
VERTICAL: 1" = N/A
HORIZONTAL: 1" = N/A

JOB NUMBER SLB0793

CALL BEFORE YOU DIG! 811 or 1-800-662-4111 BLUE STAKES

JOSHB
XREFS:

DATE: 8/3/17 TIME: 1:12:14 PM DRAWING NAME: 607 - DETAILS.DWG
SERVER: NONE PAGE SETUP: PDF-C3D-24x36 LAYOUT: Layout1
PATH: N:\SLB0793\CADD\HORIZON VILLAGE\P DESIGNER: #### PROJ. MGR: ####

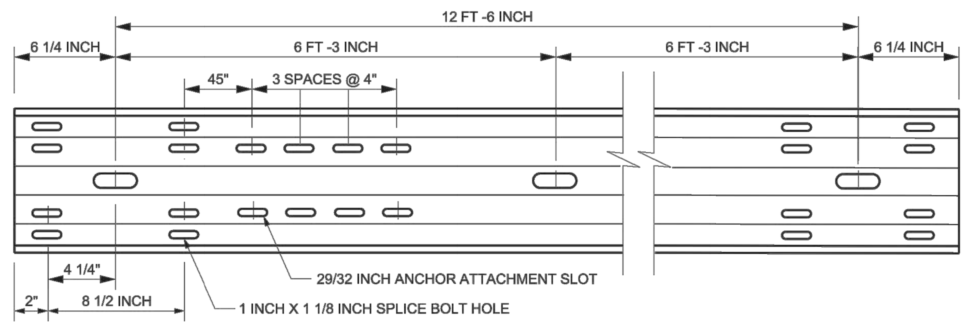

RAIL ELEMENT (RWM14A)
SEE NOTE 3

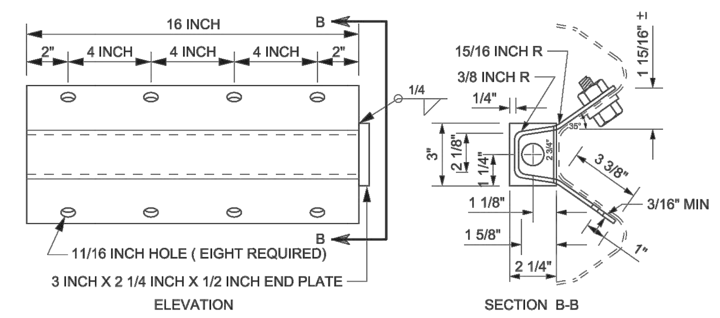

ANCHOR BRACKET (FPA01)

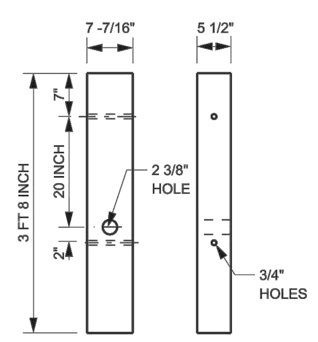

WOOD BREAKAWAY POST

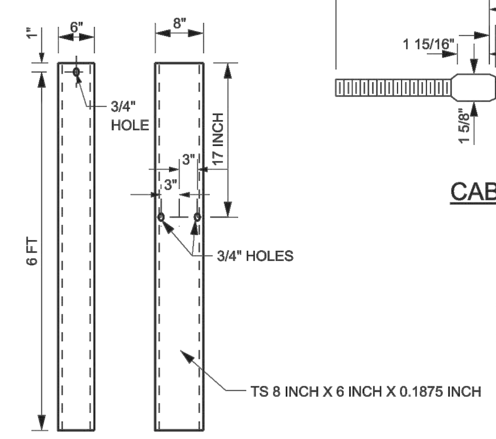

FOUNDATION TUBE (PTE05)
SEE NOTE 3

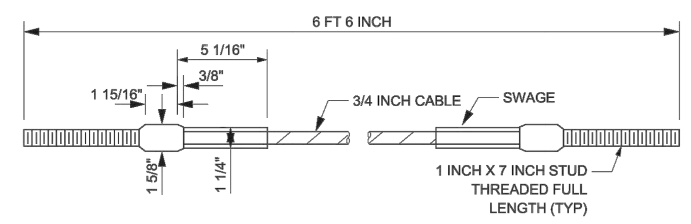

CABLE ANCHOR ASSEMBLY (FCA01)

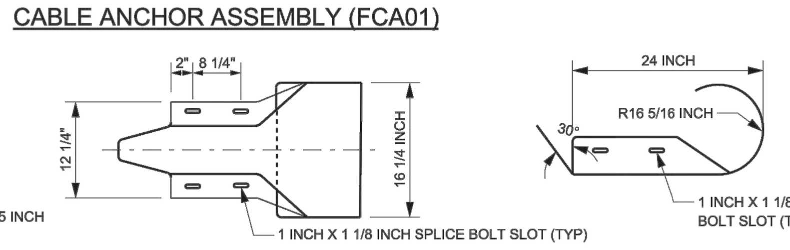

END SECTION (ROUNDED)(RWE03A)

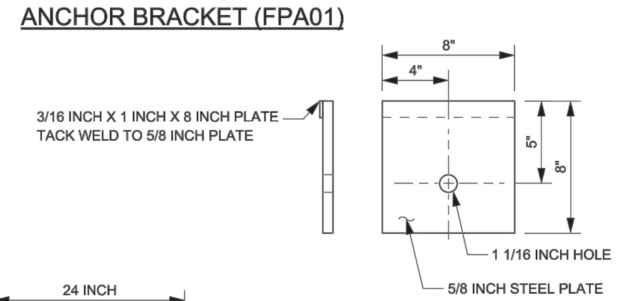

NOTE:
INSTALL BEARING PLATE WITH 5 INCH PORTION UP. SECURE PLATE TO POST USING TWO NAILS AT TOP OF PLATE.

BEARING PLATE (FPB01)

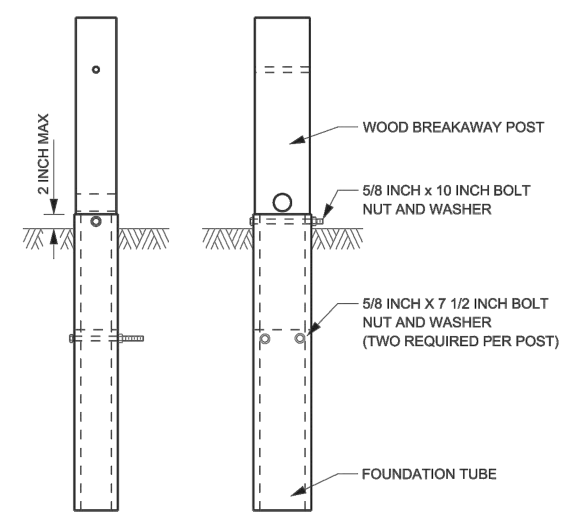

ANCHOR POST ASSEMBLY

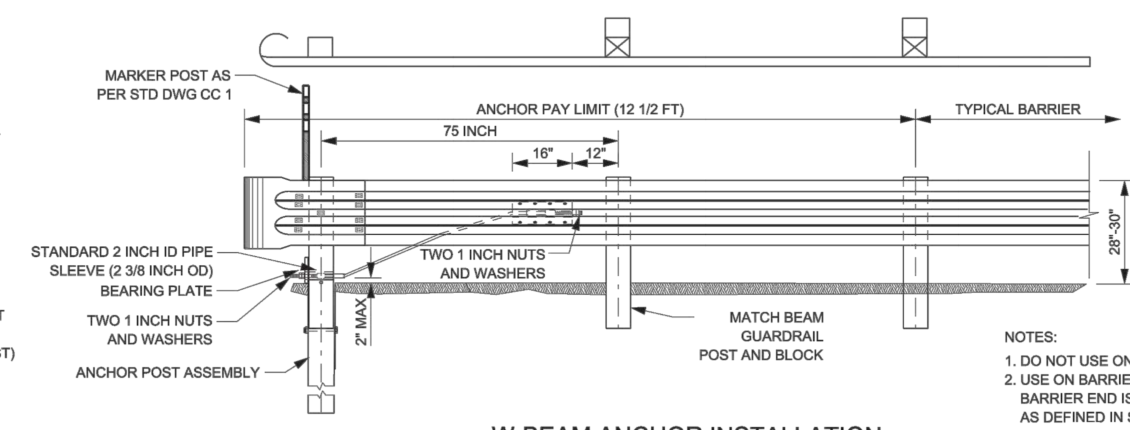

W-BEAM ANCHOR INSTALLATION

NOTES:
1. DO NOT USE ON APPROACH END.
2. USE ON BARRIER TRAILING END ON DIVIDED ROADWAYS WHEN BARRIER END IS OUTSIDE THE MAXIMUM REQUIRED CLEAR ZONE AS DEFINED IN STD DWG DD 18 AND THE AASHTO ROADSIDE DESIGN GUIDE, CURRENT EDITION.
3. MANUFACTURE ACCORDING TO AASHTO GUIDE TO STANDARDIZED HIGHWAY BARRIER HARDWARE. NUMBER IN PARENTHESIS IS GUIDE REFERENCE NUMBER.
4. MEET STANDARD SPECIFICATION 02841 STEEL AND GALVANIZING REQUIREMENTS.

REVISIONS | NO. | DATE | APPR. | REMARKS

UTAH DEPARTMENT OF TRANSPORTATION
STANDARD DRAWINGS FOR ROAD AND BRIDGE CONSTRUCTION
SALT LAKE CITY, UTAH
RECOMMENDED FOR APPROVAL JAN.01,2012 DATE
CHAIRMAN STANDARDS COMMITTEE APPROVED
DEPUTY DIRECTOR JAN.01,2012 DATE

W-BEAM GUARDRAIL ANCHOR TYPE 1
STANDARD DRAWING TITLE
STD. DWG. NO. BA 4C1

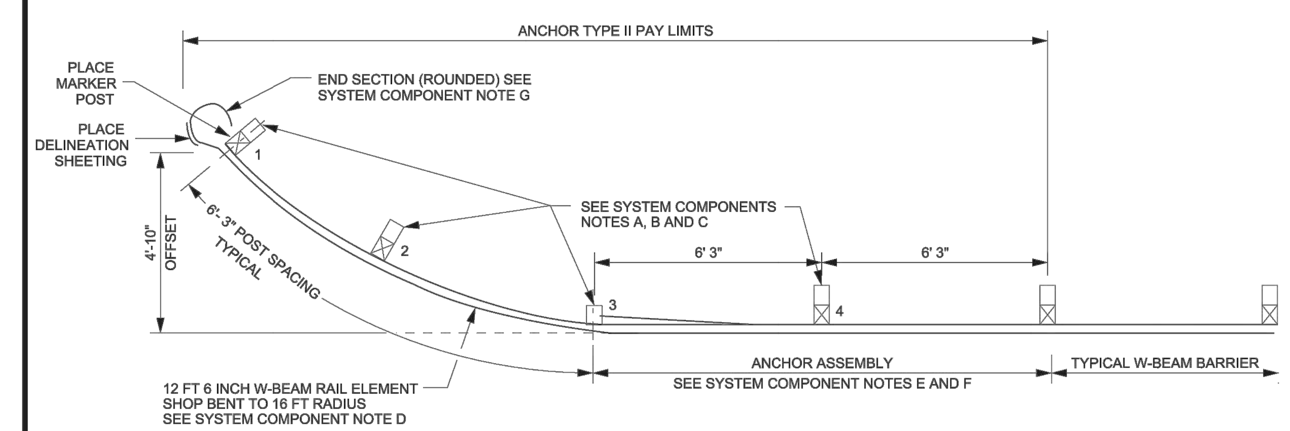

ANCHOR TYPE II DETAIL
SEE NOTE 1

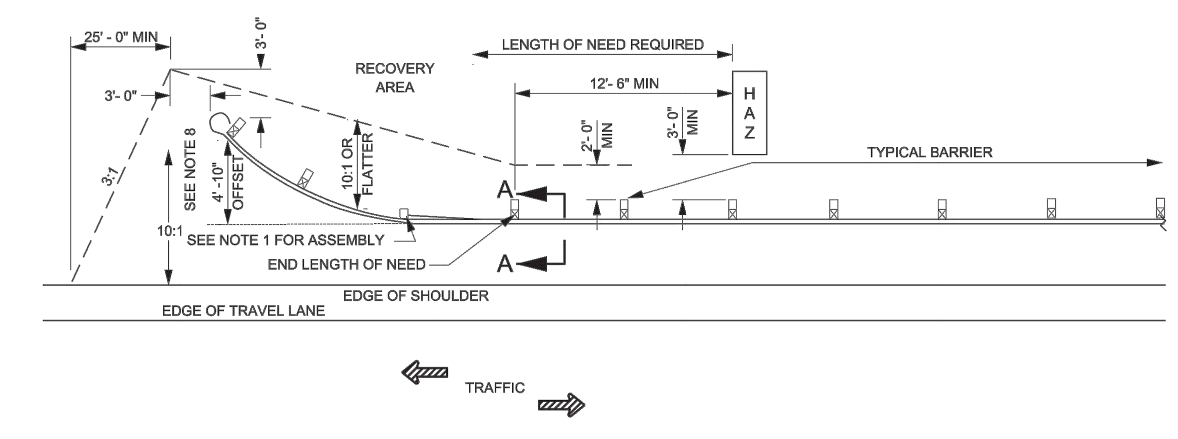

PLAN VIEW

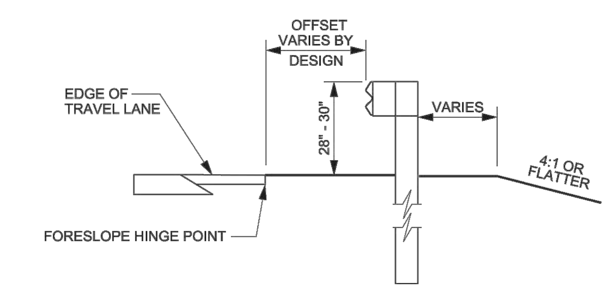

SECTION A-A

SYSTEM COMPONENTS:
A. USE FOUNDATION TUBES, ACCORDING TO STD DWG BA 4C1, AT POSTS 1, 2, AND 3.
B. USE SHORTENED WOOD BREAKAWAY POST, ACCORDING TO STD DWG BA 4C1, AT POSTS 1, 2, AND 3.
a. DO NOT INSTALL BLOCK AT POST 3.
C. USE TYPICAL POST AND BLOCK AT POST 4.
D. USE 12 FT 6 INCH RAIL, SHOP BENT TO A 16 FT RADIUS BETWEEN POSTS 1 AND 3.
E. USE 12 FT 6 INCH ANCHOR RAIL ELEMENT, ACCORDING TO STD DWG BA 4C1, BETWEEN POSTS 3 AND END OF TYPICAL BARRIER RUN.
F. USE ANCHOR BLOCK AND CABLE ASSEMBLY, ACCORDING TO STD DWG BA 4C1.
G. USE ROUNDED END SECTION ACCORDING TO STD DWG BA 4C1.

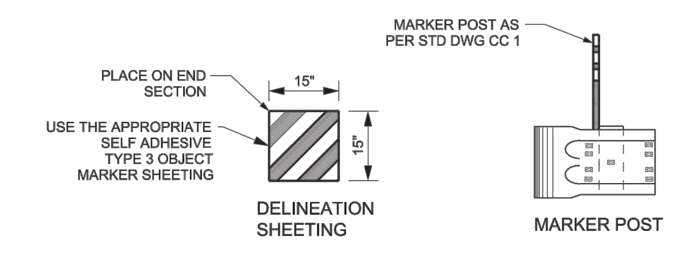

DELINEATION DETAIL

NOTES:
1. THIS IS A CRASH WORTHY ANCHOR SYSTEM.
2. USE PERMITTED ON APPROACH END OF W-BEAM BARRIER WHEN DESIGN SPEED AND POSTED SPEED ARE LESS THAN OR EQUAL TO 40 MPH. MEET GRADING REQUIREMENTS FOR APPROACH END ACCORDING TO STD DWG CC 9B.
3. USE ANCHORING SYSTEM ON TRAILING END OF W-BEAM BARRIER ON 2 - LANE, 2 - WAY ROADWAYS OR MULTI-LANE NON-DIVIDED ROADWAYS WHEN THE TYPICAL BARRIER END IS OFFSET AT OR BEYOND THE MINIMUM REQUIRED CLEAR ZONE OF OPPOSING TRAFFIC.
4. USE AN APPROVED END TREATMENT, AS LISTED IN THE GUIDELINES FOR CRASH CUSHION AND BARRIER END TREATMENTS, CURRENT EDITION WHEN DOWNSTREAM BARRIER END IS OFFSET LESS THAN THE MINIMUM REQUIRED CLEAR ZONE OF OPPOSING TRAFFIC.
5. USE PERMITTED ON THE END OF CONCRETE BARRIER WHEN A W-BEAM TRANSITION, STD DWG BA 4B2 IS INSTALLED.
6. USE ON TANGENT OR FLARED BARRIER SYSTEMS.
7. INSTALL MARKER POSTS AND SHEETING AS PER STD DWG CC 1 TYPE H DETAIL.
8. USE OF THIS ANCHORAGE PERMITTED ON SLOPES STEEPER THAN 10:1 AND FLATTER OR EQUAL TO 6:1 WHEN PLACED WITH A BARRIER SYSTEM THAT HAS AN OFFSET OF 12 FT OR MORE FROM FORESLOPE HINGE POINT. REFER TO STD DWG BA 4D2.

PLAN REVIEW ACCEPTANCE
FOR COMPLIANCE WITH THE APPLICABLE CONSTRUCTION CODES IDENTIFIED BELOW.
☒ BUILDING ☒ STRUCTURAL
☒ MECHANICAL ☒ PLUMBING
☒ ELECTRICAL ☒ ENERGY
☐ ACCESSIBILITY ☐ FIRE
PLAN REVIEW ACCEPTANCE OF DOCUMENTS DOES NOT AUTHORIZE CONSTRUCTION TO PROCEED IN VIOLATION OF ANY FEDERAL, STATE, OR LOCAL REGULATIONS.
BY: MEM DATE: 08/24/17
WEST COAST CODE CONSULTANTS, INC.

REVISIONS | NO. | DATE | APPR. | REMARKS

UTAH DEPARTMENT OF TRANSPORTATION
STANDARD DRAWINGS FOR ROAD AND BRIDGE CONSTRUCTION
SALT LAKE CITY, UTAH
RECOMMENDED FOR APPROVAL JAN. 01, 2012 DATE
CHAIRMAN STANDARDS COMMITTEE APPROVED
DEPUTY DIRECTOR JAN. 01, 2012 DATE

W-BEAM GUARDRAIL ANCHOR TYPE II
STANDARD DRAWING TITLE
STD. DWG. NO. BA 4C2

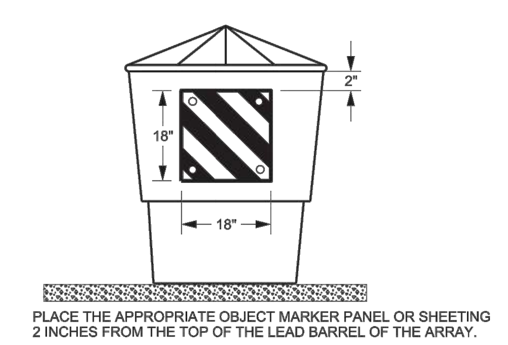

PLACE THE APPROPRIATE OBJECT MARKER PANEL OR SHEETING 2 INCHES FROM THE TOP OF THE LEAD BARREL OF THE ARRAY.

MARKER POST NOT REQUIRED.

CRASH CUSHION TYPE E

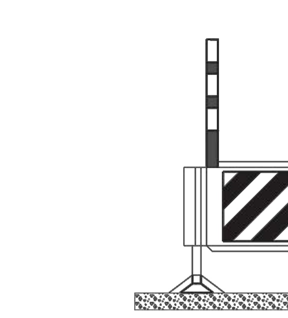

OBJECT MARKER PLATE OR SHEETING: ATTACH TO THE TOP FRONT AND SIDE OF UNIT NEAREST THE APPROACH LANE OF TRAFFIC. IN A GORE AREA CENTER OBJECT MARKER.

* APPROVED SYSTEM TYPE D, REACT-350 HAS AN OBJECT MARKER SUPPLIED WITH THE SYSTEM, MARKER POST IS NOT REQUIRED.

CRASH CUSHIONS TYPE A,B, & D

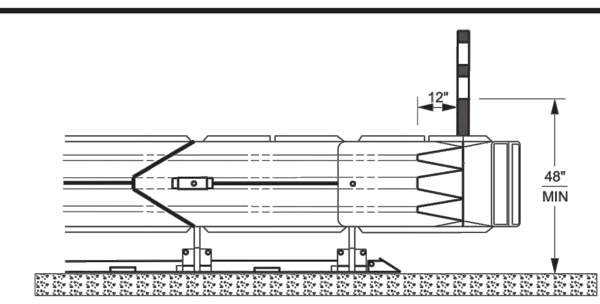

CRASH CUSHIONS TYPE A,B, & D

MARKER POST:
MOUNT ON THE SIDE OF THE APPROACH TRAFFIC, 12 INCHES FROM THE BACK EDGE OF PLASTIC NOSE PIECE. IN GORE AREAS MOUNT ON BOTH SIDES.

END TREATMENT TYPE F
QUADTREND 350 SYSTEM HAS A BELTED OR PLASTIC NOSE PIECE AND STEEL POSTS.OBJECT MARKER MOUNTING SIMILAR TO TYPE H AND MARKER POST IS MOUNTED ON THE NOSE PIECE SIMILAR TO TYPE B.

BEAT-SSCC:
INSTALL OBJECT MARKER PANEL ONTO IMPACT HEAD.
INSTALL MARKER POST ON POST 1 OF THE SYSTEM.

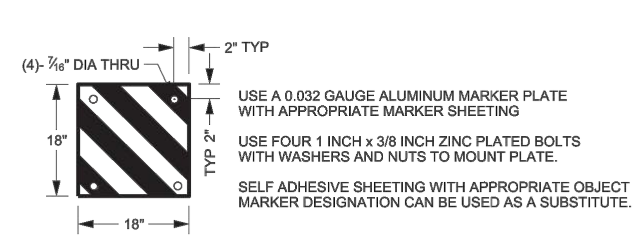

USE A 0.032 GAUGE ALUMINUM MARKER PLATE WITH APPROPRIATE MARKER SHEETING

USE FOUR 1 INCH x 3/8 INCH ZINC PLATED BOLTS WITH WASHERS AND NUTS TO MOUNT PLATE.

SELF ADHESIVE SHEETING WITH APPROPRIATE OBJECT MARKER DESIGNATION CAN BE USED AS A SUBSTITUTE.

MARKER PLATE

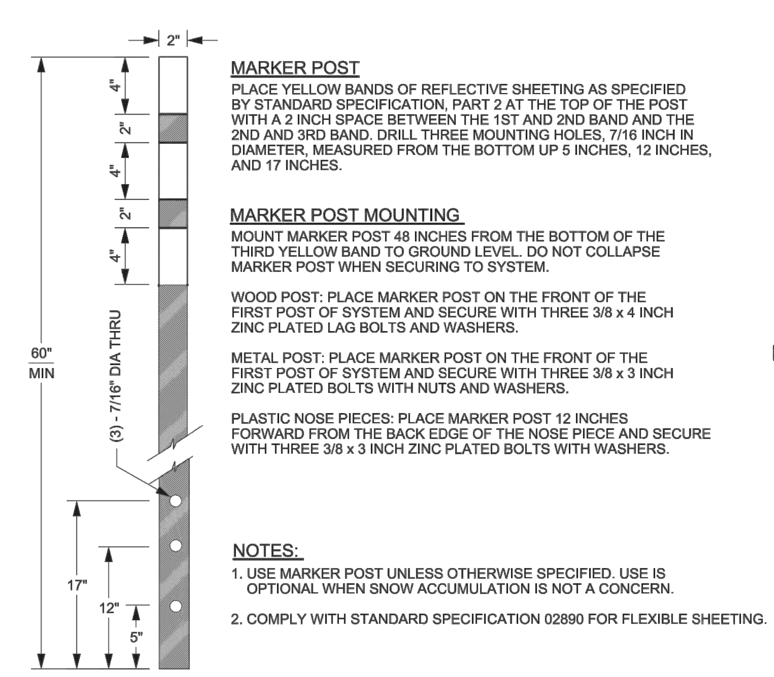

MARKER POST
PLACE YELLOW BANDS OF REFLECTIVE SHEETING AS SPECIFIED BY STANDARD SPECIFICATION, PART 2 AT THE TOP OF THE POST WITH A 2 INCH SPACE BETWEEN THE 1ST AND 2ND BAND AND THE 2ND AND 3RD BAND. DRILL THREE MOUNTING HOLES, 7/16 INCH IN DIAMETER, MEASURED FROM THE BOTTOM UP 5 INCHES, 12 INCHES, AND 17 INCHES.

MARKER POST MOUNTING
MOUNT MARKER POST 48 INCHES FROM THE BOTTOM OF THE THIRD YELLOW BAND TO GROUND LEVEL. DO NOT COLLAPSE MARKER POST WHEN SECURING TO SYSTEM.

WOOD POST: PLACE MARKER POST ON THE FRONT OF THE FIRST POST OF SYSTEM AND SECURE WITH THREE 3/8 x 4 INCH ZINC PLATED LAG BOLTS AND WASHERS.

METAL POST: PLACE MARKER POST ON THE FRONT OF THE FIRST POST OF SYSTEM AND SECURE WITH THREE 3/8 x 3 INCH ZINC PLATED BOLTS WITH NUTS AND WASHERS.

PLASTIC NOSE PIECES: PLACE MARKER POST 12 INCHES FORWARD FROM THE BACK EDGE OF THE NOSE PIECE AND SECURE WITH THREE 3/8 x 3 INCH ZINC PLATED BOLTS WITH WASHERS.

NOTES:
1. USE MARKER POST UNLESS OTHERWISE SPECIFIED. USE IS OPTIONAL WHEN SNOW ACCUMULATION IS NOT A CONCERN.
2. COMPLY WITH STANDARD SPECIFICATION 02890 FOR FLEXIBLE SHEETING.

MARKER POST

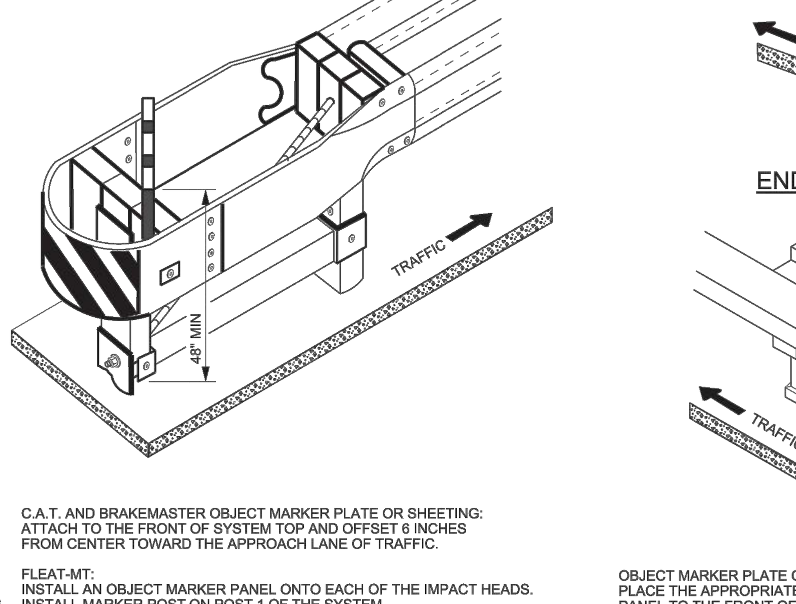

C.A.T. AND BRAKEMASTER OBJECT MARKER PLATE OR SHEETING: ATTACH TO THE FRONT OF SYSTEM TOP AND OFFSET 6 INCHES FROM CENTER TOWARD THE APPROACH LANE OF TRAFFIC.

FLEAT-MT:
INSTALL AN OBJECT MARKER PANEL ONTO EACH OF THE IMPACT HEADS. INSTALL MARKER POST ON POST 1 OF THE SYSTEM.

CRASH CUSHION TYPE C

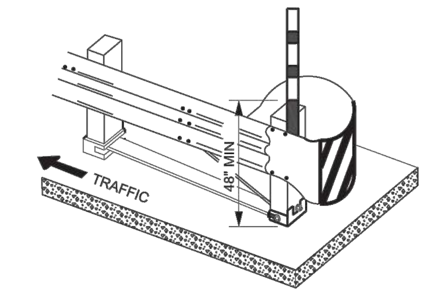

END TREATMENT TYPE H

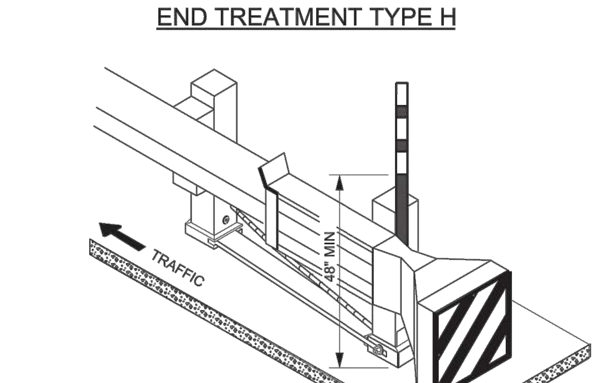

OBJECT MARKER PLATE OR SHEETING: PLACE THE APPROPRIATE OBJECT MARKER PANEL TO THE FRONT OF THE SYSTEMS.

END TREATMENT TYPE G

REVISIONS | NO. | DATE | APPR. | REMARKS

UTAH DEPARTMENT OF TRANSPORTATION
STANDARD DRAWINGS FOR ROAD AND BRIDGE CONSTRUCTION
SALT LAKE CITY, UTAH
RECOMMENDED FOR APPROVAL JAN.01,2012 DATE
CHAIRMAN STANDARDS COMMITTEE APPROVED
DEPUTY DIRECTOR JAN.01,2012 DATE

CRASH CUSHION AND END TREATMENT MARKINGS
STANDARD DRAWING TITLE
STD. DWG. NO. CC 1

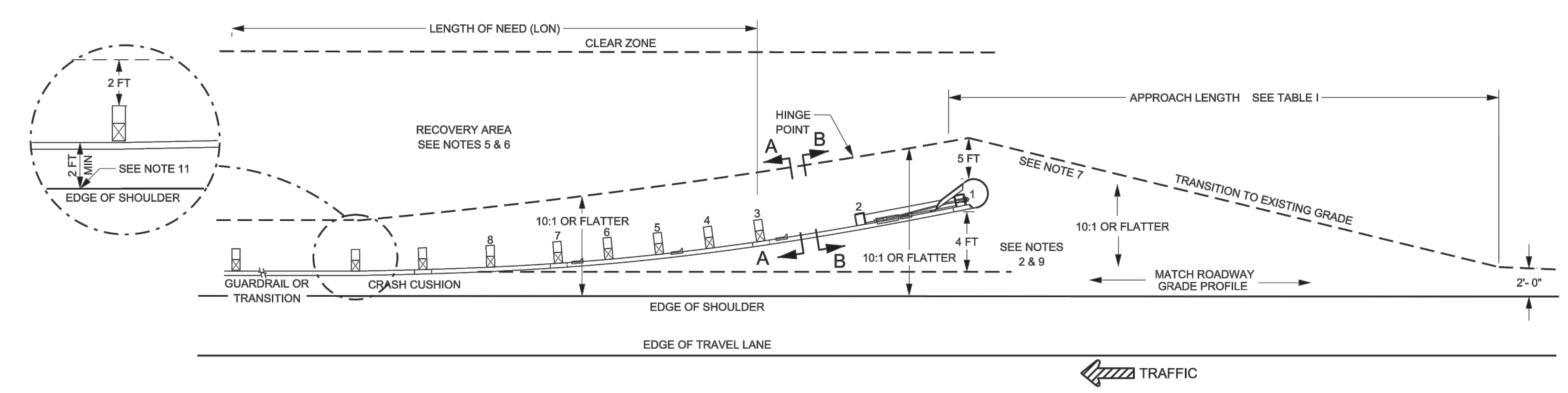

SRT-350
(8 POSTS)
SEE NOTE 1

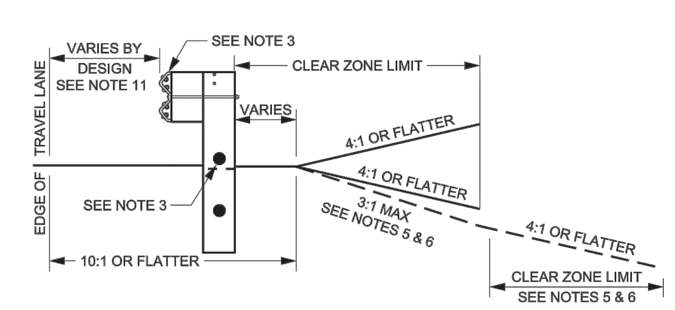

TYPICAL SECTION A-A
POSTS 3-8

TABLE 1	
SPEED MPH	MIN LENGTH (L)
LESS THAN 40	50 FT
40 TO 55	70 FT
60 TO 80	100 FT

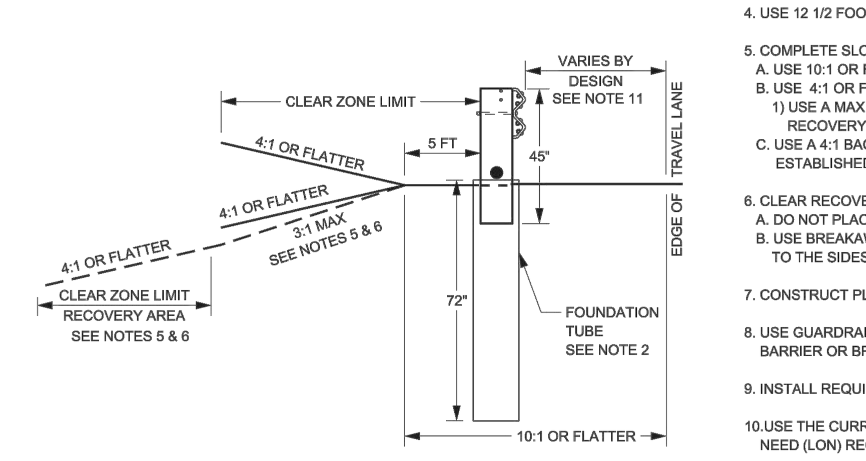

TYPICAL SECTION B-B
POSTS 1-2

NOTES:
1. DO NOTE USE FOR DESIGN. SRT 350 MANUFACTURED BY TRINITY INDUSTRIES IS NO LONGER AN APPROVED SYSTEM. DRAWING MAINTAINED FOR MAINTENANCE PURPOSES.
2. SYSTEM OFFSET:
A. THE SRT-350 INCORPORATES A PARABOLIC FLARE. INSTALL SYSTEM WITH A 4 FT OFFSET FROM THE BARRIER LINE EXTENDED ON BOTH A TANGENT AND FLARED INSTALLATION.
3. POST OPTIONS:
A. WOOD POST ONLY
1) POSTS 1 AND 2, 45 INCH BREAKAWAY POSTS SET INSIDE 6 FT FOUNDATION TUBES. TUBES NO GREATER THEN 4 INCHES ABOVE GROUND.
2) POSTS 3 THROUGH 8 STANDARD CRT POST. THE BOTTOM OF THE TOP HOLE OF THE CRT POLE IS PLACED AT GROUND LEVEL.
4. USE 12 1/2 FOOT RAIL SECTIONS (3 EACH SECTIONS), SLOTTED ACCORDING TO MANUFACTURER'S REQUIREMENTS.
5. COMPLETE SLOPE PREPARATION BEFORE INSTALLING SYSTEM.
A. USE 10:1 OR FLATTER SLOPES IN APPROACH AREA.
B. USE 4:1 OR FLATTER FORESLOPE OR BACKSLOPE IN THE RECOVERY AREA.
1) USE A MAX 3:1 FORESLOPE IF A 4:1 FORESLOPE. IN RECOVERY AREA IS IMPRACTICAL. ESTABLISH A RECOVERY AREA AT THE TOE OF THE 3:1 FORESLOPE OF 4:1 OR FLATTER.
C. USE A 4:1 BACKSLOPE TO THE CLEAR ZONE LIMIT IN THE RECOVERY AREA. IF A 4:1 CANNOT BE ESTABLISHED A 3:1 IS PERMITTED.
6. CLEAR RECOVERY AND APPROACH AREAS OF ANY FIXED OBJECTS OR HAZARDS.
A. DO NOT PLACE SIGNS OR POLES IN APPROACH AREA.
B. USE BREAKAWAY SIGNS OR POLES WHEN PLACED IN RECOVERY AREA. MAINTAIN A MINIMUM 10 FT CLEARANCE TO THE SIDES AND REAR OF SYSTEM.
7. CONSTRUCT PLATFORM AS REQUIRED EVEN IF THE PLATFORM EXTENDS BEYOND THE CLEAR ZONE REQUIREMENTS.
8. USE GUARDRAIL TRANSITION, BA 4 SERIES STD DWGS, WHEN ATTACHING THE SYSTEM TO CONCRETE BARRIER OR BRIDGE PARAPET.
9. INSTALL REQUIRED MARKINGS ACCORDING TO STD DWG CC 1.
10.USE THE CURRENT ROADSIDE DESIGN GUIDE TO ESTABLISH CLEAR ZONE AND LENGTH OF NEED (LON) REQUIREMENTS.
11. 2 FT MINIMUM BARRIER OFFSET IS OPTIONAL WHEN ROADWAY DESIGN REQUIRES A 12 FT OR WIDER EFFECTIVE SHOULDER.

REVISIONS | NO. | DATE | APPR. | REMARKS

UTAH DEPARTMENT OF TRANSPORTATION
STANDARD DRAWINGS FOR ROAD AND BRIDGE CONSTRUCTION
SALT LAKE CITY, UTAH
RECOMMENDED FOR APPROVAL JAN.01,2012 DATE
CHAIRMAN STANDARDS COMMITTEE APPROVED
DEPUTY DIRECTOR JAN.01,2012 DATE

MAINTENANCE ONLY GRADING AND INSTALLATION DETAILS END TREATMENT TYPE H
STANDARD DRAWING TITLE
STD. DWG. NO. CC 9B

CALL BEFORE YOU DIG! IT'S THE LAW
BLUE STAKES 1 800 662 4111

NO.	BY	DATE	REVISIONS:

CAUTION
The engineer preparing these plans will not be responsible for, or liable for, unauthorized changes to or uses of these plans. All changes to the plans must be in writing and must be approved by the preparer of these plans.

HORIZON NEIGHBORHOOD PRUD
GUARDRAIL DETAILS

PREPARED FOR: SUMMIT POWDER MOUNTAIN
DATE SUBMITTED: 08.03.2017

TALISMAN
CIVIL CONSULTANTS
5217 SOUTH STATE STREET, SUITE 200 MURRAY, UT 84107
801.743.1300 TEL 801.743.0300 FAX

REGISTERED PROFESSIONAL ENGINEER
No. 7899506
RYAN W. CATHEY
8/3/17
STATE OF UTAH

SHEET NUMBER
6.07

SCALE
VERTICAL: 1"= N/A
HORIZONTAL: 1"= N/A

JOB NUMBER
SLB0793

JOSHB
XREFS:

TYPE	INTERIOR WALL TYPE DESCRIPTION	TYPE	INTERIOR WALL TYPE DESCRIPTION
P1	6 1/2" + 1/2" GWB, PTD + 2x6 studs @ 16" o.c. + 1/2" GWB, PTD	P10	10" + 1x4 horizontal shiplap wood cladding - type 2 + 2x2 furring + 2x8 studs @ 16" o.c. + 1/2" GWB, PTD
P2	6 1/2" + 1/2" GWB, PTD + 2x6 studs @ 16" o.c. + 5 1/2" acoustic batt in cavity + 1/2" GWB, PTD	P11	1'-0" + 1/2" GWB, PTD + 2x6 studs @ 16" o.c. + 5 1/2" acoustic batt in cavity + 2x6 studs @ 16" o.c. + 1/2" GWB, PTD
P3	7 1/2" + 1x4 vertical shiplap wood cladding - type 1 + 1x2 horizontal wood strapping as required + 2x6 studs @ 16" o.c. + 5 1/2" acoustic batt in cavity + 1/2" GWB, PTD	P12	1'-0 5/8" + tile as per spec + 5/8" tile backer board + 2x6 studs @ 16" o.c. + 5 1/2" acoustic batt in cavity + 2x6 studs @ 16" o.c. + 1/2" GWB, PTD
P4	7 1/8" + tile as per spec + 5/8" tile backer board + 2x6 studs @ 16" o.c. + 5 1/2" acoustic batt in cavity + 1/2" GWB, PTD	P13	1'-0 1/4" + 1x4 horizontal shiplap wood cladding - type 2 + 2x6 studs @ 16" o.c. + 5 1/2" acoustic batt in cavity + 2x6 studs @ 16" o.c. + 1/2" GWB, PTD
P5	7 3/4" + tile as per spec + 5/8" tile backer board + 2x6 studs @ 16" o.c. + 5 1/2" acoustic batt in cavity + 5/8" tile backer board + tile as per spec	P14	8 1/8" + 1x4 vertical shiplap wood cladding - type 1 + 1x2 horizontal wood strapping as required + 2x6 studs @ 16" o.c. + 5 1/2" acoustic batt in cavity + 5/8" tile backer board + tile as per spec
P6	6 3/4" + 1x4 horizontal shiplap wood cladding - type 2 + 2x6 studs @ 16" o.c. + 5 1/2" acoustic batt in cavity + 1/2" GWB, PTD	P15	8 1/2" + 1x4 vertical shiplap wood cladding - type 1 + 1x2 horizontal wood strapping as required + 2x6 studs @ 16" o.c. + 5 1/2" acoustic batt in cavity + 1x2 horizontal wood strapping as required + 1x4 vertical shiplap wood cladding - type 1
P7	9 1/4" + 1x4 vertical shiplap wood cladding - type 1 + 1x2 horizontal wood strapping as required + 2x8 studs @ 16" o.c. + 5 1/2" acoustic batt in cavity + 1/2" GWB, PTD	P16	3 3/4" + tile as per spec + 5/8" tile backer board + 2x6 studs on the flat + 5/8" tile backer board + tile as per spec
P8	9 1/4" + 1x4 vertical shiplap wood cladding - type 1 + 2x4 studs on the flat @ 16" o.c. horizontally blocked to support vertical wood cladding + 5" cavity for sliding doors + 2x4 studs on the flat @ 16" o.c. + 1/2" GWB, PTD	P17	7 3/8" + 1x4 horizontal shiplap wood cladding - type 2 + 2x6 studs @ 16" o.c. + 5 1/2" acoustic batt in cavity + 5/8" tile backer board + tile as per spec
P9	10 1/4" + 1x4 vertical shiplap wood cladding - type 1 + 1x2 horizontal wood strapping as required + 2x6 studs @ 16" o.c. + 5 1/2" acoustic batt in cavity + 2 3/4" blocking + 1/2" GWB, PTD	P18	7 1/2" + 1x4 horizontal shiplap wood cladding - type 2 + 2x6 studs @ 16" o.c. + 5 1/2" acoustic batt in cavity + 1x2 furring + 1/2" GWB, PTD

3 A001 Partition Type Legend
Scale 1 1/2" = 1'-0"

EXTERIOR ROOF AND SOFFIT TYPE DESCRIPTION

Roof Assembly 1

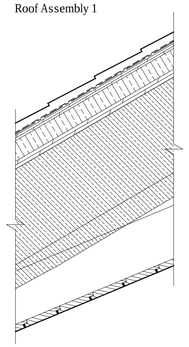

System Components:

+ 'Class B' fire retardant pressure treated cedar shingles
+ 'Class A' mineral-surfaced cap sheet
+ self-adhering sheet roof membrane underlayment
+ 1/2" exterior grade plywood
+ 2" continuous XPS rigid insulation (R10)
+ 3/4" plywood sheathing as per structural
+ wood trusses as per structural
+ 6" 2lb. closed cell sprayfoam insulation (R30 - air barrier / vapor retarder Class 2)
+ interior sprinkler system as per A101 code review
+ 3/4" shiplap wood cladding - type 2 - see A001 for profile

Soffit Assembly 1

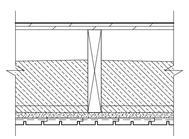

System Components:

+ 3/4" sheathing
+ 6" 2lb. sprayfoam insulation (R30 - air barrier / vapor retarder Class 2)
+ wood roof joists as per structural
+ 5/8" type X gypsum sheathing
+ vapor permeable weather barrier
+ 1x4 wood shiplap cladding - type 1 - see A001 for profile

Floor Assembly 4

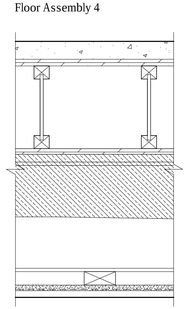

System Components:

+ 3" concrete topping w/ in-floor heating
+ plywood sheathing as per structural
+ wood floor joists as per structural
+ 1/2" plywood
+ steel beam as per structural
+ 6" 2lb. sprayfoam insulation (R30 - air barrier / vapor retarder Class 2)
+ 2x4 nailer as required
+ 5/8" type X gypsum sheathing
+ vapour permeable weather barrier
+ rainscreen grid
+ 1x4 wood shiplap cladding - type 1 - see A001 for profile

EXTERIOR WALL TYPE DESCRIPTION

Exterior Wall Assembly 1A - UL DESIGN #305
(1 HR Fire Resistance Rating)

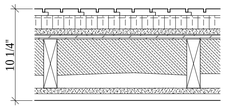

System Components:

+ 1x4 vertical shiplap wood cladding - type 1 - see below
+ rainscreen grid
+ vapor permeable weather barrier
+ 1 1/2" continuous XPS rigid insulation (R7.5)
+ 5/8" type X gypsum sheathing
+ 1/2" plywood sheathing as per structural
+ 2x6 wood studs as per structural
+ 4" 2lb. sprayfoam insulation (R20 - air barrier / vapor retarder Class 2)
+ 5/8" type X gypsum wallboard (5/8" type X gypsum tile backer board in wet areas)
+ refer to room finish schedule for interior finish

Exterior Wall Assembly 1B - UL DESIGN #305
(1 HR Fire Resistance Rating)

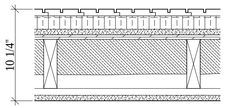

System Components:

+ 1x4 vertical shiplap wood cladding - type 1 - see below
+ rainscreen grid
+ vapor permeable weather barrier
+ 1 1/2" continuous XPS rigid insulation (R7.5)
+ 5/8" type X gypsum sheathing
+ 1/2" plywood sheathing as per structural
+ 2x6 wood studs as per structural
+ 4" 2lb. sprayfoam insulation (R20 - air barrier / vapor retarder Class 2)
+ 1x4 wood strapping @ 16" o.c.
+ 5/8" type X gypsum wallboard (5/8" type X gypsum tile backer board in wet areas)
+ refer to room finish schedule for interior finish

SHIPLAP CLADDING PROFILES

Type 1

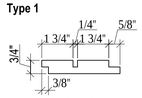

+ 1x4 vertical shiplap wood cladding - 1/4"x3/8" kerf cut at centreline of board

Type 2

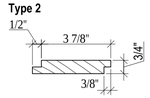

+ 1x4 horizontal shiplap wood cladding

2 A001 Key Plan
Scale 1/128" = 1'-0"

AD	AREA DRAIN
ADJ	ADJACENT
AFF	ABOVE FINISHED FLOOR
ALUM	ALUMINUM
ANOD	ANODIZED
BSMT	BASEMENT
BYOND	BEYOND
BOT	BOTTOM
B/W	BETWEEN
CHNL	CHANNEL
CJ	CONTROL JOINT
CLG	CEILING
CLR	CLEAR
CMU	CONCRETE MASONRY UNIT
COF	CENTERLINE OF WOOD FRAMING
COL	COLUMN
CONC	CONCRETE
CONT	CONTINUOUS
CPT	CARPET
CT	CERAMIC TILE
DBL	DOUBLE
DIA	DIAMETER
DIMS	DIMENSIONS
DN	DOWN
DR	DOOR
DWG	DRAWING
EA	EACH
EL	ELEVATION
ELEC	ELECTRICAL
ELEV	ELEVATOR / ELEVATION
EQ	EQUAL
FOF	FACE OF WOOD FRAMING
FDN	FOUNDATION
GA	GAUGE
GALV	GALVANIZED
GWB	GYPSUM WALL BOARD
HC	HOLLOW CORE
HI	HIGH
HM	HOLLOW METAL
HP	HIGH POINT
HVAC	HEATING, VENTILATING, AND AIR CONDITIONING
ILO	IN LIEU OF
INSUL	INSULATED
INT	INTERIOR
LO	LOW

PLAN REVIEW ACCEPTANCE
FOR COMPLIANCE WITH THE APPLICABLE CONSTRUCTION CODES IDENTIFIED BELOW.
☒ BUILDING ☒ STRUCTURAL
☒ MECHANICAL ☒ PLUMBING
☒ ELECTRICAL ☒ ENERGY
☐ ACCESSIBILITY ☐ FIRE
PLAN REVIEW ACCEPTANCE OF DOCUMENTS DOES NOT AUTHORIZE CONSTRUCTION TO PROCEED IN VIOLATION OF ANY FEDERAL, STATE, OR LOCAL REGULATIONS.
BY: MEM DATE: 08/24/17
WEST COAST CODE CONSULTANTS, INC.

NOTES:

1. See A102 for Room Finish Schedule
2. A permanent certificate shall be completed and located in an approved location that lists the predominant R-values of the insulation installed in the ceiling/roof, walls, foundation and ducts outside conditioned spaces and U-factors for fenestration.
3. Building thermal envelope to be sealed with 6mil Poly Air Barrier where continuity of 2lb. closed cell sprayfoam is interrupted to ensure continuity of air barrier.

1 A001 Abbreviations

Horizon Neighborhood Cabins
Summit Powder Mountain
Eden, Utah

MacKay-Lyons Sweetappie Architects Limited
2188 Göttingen St.
Halifax, Nova Scotia
Canada B3K 3B4
ph: (902) 429.1867
fax: (902) 429.6276

true north

construction north

STATE OF UTAH
Brian MacKay-Lyons
No. 9809836
LICENSED ARCHITECT

04	Issued for Const. Rev. 2	15.08.2017
03	Issued for Const. Rev. 1	21.07.2017
02	Issued for Construction	17.03.2017
01	Issued for FDN Permit	28.10.2016
No.	Description	Date
Revision:		

NOTES:

COPYRIGHT RELATED TO THE USE OF THIS DRAWING:
The use of this drawing shall be governed by standard copyright law as generally accepted in architectural practice.

ARCHITECT'S REQUIREMENTS AND APPROVALS:
It is the Builder's responsibility to notify MacKay-Lyons Sweetapple Architects Ltd. and to seek prior written approval for materials and workmanship which deviates from instructions provided by the Architect.

ENGINEER'S REQUIREMENTS AND APPROVALS:
It is the Builder's responsibility to notify MacKay-Lyons Sweetapple Architects Ltd. and to seek prior written approval for materials and workmanship which deviates from instructions provided by the Engineer.

AUTHORITIES' REQUIREMENTS AND APPROVALS:
All materials and workmanship must comply with the requirements of all authorities having jurisdication over the work. It is the Builder's responsibility to gain necessary approval from all relevant Authorities.

DIMENSIONS:
All dimensions must be verified on site. Do not scale off drawings. Plans take precedent over elevations. In the absence of dimensions, or if discrepancies exist, consult Architect. All minimum dimensions are to comply with the International Residential Code.

SHOP DRAWINGS:
Submit shop drawings to the Architect and Engineer for approval prior to manufacture of prefabricated elements of the building.

Cabin 1000

Abbreviations, Key Plan & Partition Types

scale: varies
date: 16-07-18
drawn: MJ/JL
chk'd: BML

A001

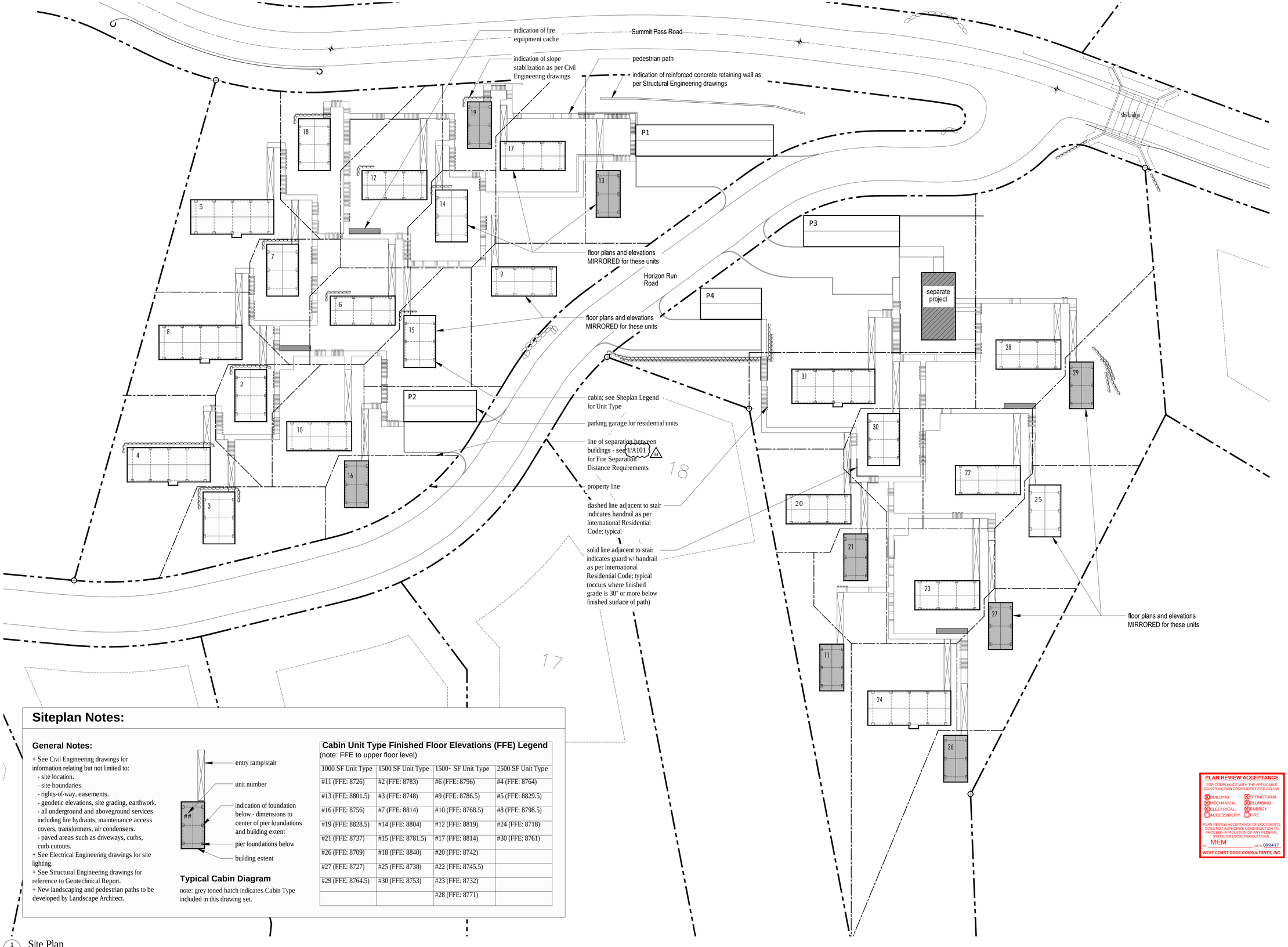

Siteplan Notes:

General Notes:

+ See Civil Engineering drawings for information relating but not limited to:
  - site location.
  - site boundaries.
  - rights-of-way, easements.
  - geodetic elevations, site grading, earthwork.
  - all underground and aboveground services including fire hydrants, maintenance access covers, transformers, air condensers.
  - paved areas such as driveways, curbs, curb cutouts.
+ See Electrical Engineering drawings for site lighting.
+ See Structural Engineering drawings for reference to Geotechnical Report.
+ New landscaping and pedestrian paths to be developed by Landscape Architect.

Typical Cabin Diagram

note: grey toned hatch indicates Cabin Type included in this drawing set.

Cabin Unit Type Finished Floor Elevations (FFE) Legend

(note: FFE to upper floor level)

1000 SF Unit Type	1500 SF Unit Type	1500+ SF Unit Type	2500 SF Unit Type
#11 (FFE: 8726)	#2 (FFE: 8783)	#6 (FFE: 8796)	#4 (FFE: 8764)
#13 (FFE: 8801.5)	#3 (FFE: 8748)	#9 (FFE: 8786.5)	#5 (FFE: 8829.5)
#16 (FFE: 8756)	#7 (FFE: 8814)	#10 (FFE: 8768.5)	#8 (FFE: 8798.5)
#19 (FFE: 8828.5)	#14 (FFE: 8804)	#12 (FFE: 8819)	#24 (FFE: 8718)
#21 (FFE: 8737)	#15 (FFE: 8781.5)	#17 (FFE: 8814)	#30 (FFE: 8761)
#26 (FFE: 8709)	#18 (FFE: 8840)	#20 (FFE: 8742)	
#27 (FFE: 8727)	#25 (FFE: 8738)	#22 (FFE: 8745.5)	
#29 (FFE: 8764.5)	#30 (FFE: 8753)	#23 (FFE: 8732)	
		#28 (FFE: 8771)	

1 / A100 Site Plan
Scale 1/32" = 1'-0"

PLAN REVIEW ACCEPTANCE

FOR COMPLIANCE WITH THE APPLICABLE CONSTRUCTION CODES IDENTIFIED BELOW.

- [X] BUILDING
- [X] MECHANICAL
- [X] ELECTRICAL
- [ ] ACCESSIBILITY
- [X] STRUCTURAL
- [X] PLUMBING
- [X] ENERGY
- [ ] FIRE

PLAN REVIEW ACCEPTANCE OF DOCUMENTS DOES NOT AUTHORIZE CONSTRUCTION TO PROCEED IN VIOLATION OF ANY FEDERAL, STATE, OR LOCAL REGULATIONS.

BY: MEM DATE: 08/24/17

WEST COAST CODE CONSULTANTS, INC.

Horizon Neighborhood
CABINS

Summit Powder Mountain
Eden, Utah

MacKay-Lyons Sweetapple Architects Limited
2188 Gottingen St.
Halifax, Nova Scotia
Canada B3K 3B4
ph: (902) 429.1867
fax: (902) 429.6276

true north

construction north

STATE OF UTAH
Brian MacKay-Lyons
No. 9809836
LICENSED ARCHITECT

No.	Description	Date
04	Issued for Const. Rev. 2	15.08.2017
03	Issued for Const. Rev. 1	21.07.2017
02	Issued for Construction	17.03.2017
01	Issued for FDN Permit	28.10.2016

Revision:

NOTES:

COPYRIGHT RELATED TO THE USE OF THIS DRAWING:
The use of this drawing shall be governed by standard copyright law as generally accepted in architectural practice.

ARCHITECT'S REQUIREMENTS AND APPROVALS:
It is the Builder's responsibility to notify MacKay-Lyons Sweetapple Architects Ltd. and to seek prior written approval for materials and workmanship which deviates from instructions provided by the Architect.

ENGINEER'S REQUIREMENTS AND APPROVALS:
It is the Builder's responsibility to notify MacKay-Lyons Sweetapple Architects Ltd. and to seek prior written approval for materials and workmanship which deviates from instructions provided by the Engineer.

AUTHORITIES' REQUIREMENTS AND APPROVALS:
All materials and workmanship must comply with the requirements of all authorities having jurisdication over the work. It is the Builder's responsibility to gain necessary approval from all relevant Authorities.

DIMENSIONS:
All dimensions must be verified on site. Do not scale off drawings. Plans take precedent over elevations. In the absence of dimensions, or if discrepancies exist, consult Architect. All minimum dimensions are to comply with the International Residential Code.

SHOP DRAWINGS:
Submit shop drawings to the Architect and Engineer for approval prior to manufacture of prefabricated elements of the building.

Cabin 1000
Site Plan

scale: 1/32" = 1'-0"
date: 16-07-04
drawn: DP
chk'd: BML

A100

Project: **POWDER MOUNTAIN CABIN 1000 CODE ANALYSIS**

Project No.
Date: 10/14/2016

x	User Input
x	Auto Input
Yes	Incorporated in the Project
N/A	Not Applicable as part of this Project
AGP	Above Grade Plane- story
FDVA	Fire Department Vehicle Access
FSD	Fire Separation Distance
BO	Building Official

Planning & Zoning Official: WEBER COUNTY, UTAH
Building Official: WEBER COUNTY, UTAH
Plans Examiner: WEBER COUNTY, UTAH
Engineering: WEBER COUNTY, UTAH
Health Department: WEBER COUNTY, UTAH

Applicable Codes:

~~2012~~		
~~2013~~	IBC	International Building Code, ~~with Appendix "H"~~
2015	IFC	International Fire Code
2015	IRC	International Residential Code (Parts I-IV and IX)
2015	IPC	International Plumbing Code
2015	IMC	International Mechanical Code
2014	NEC	National Electrcial Code
2015	IFGC	International Fuel Gas Code
2015	IECC	International Energy Conservation Code: Residential
2015	IECC	International Energy Conservation Code: Commercial
2009	ANSI	ICC/American National Standard A117.1 + FHA + ADAAG

04

Y Amendments (State or Local) (Building Code Amend. at www.dopl.utah.gov)
Title 18 of Salt Lake City Ordinances

Chapter 3 - Occupancy Classification

*Table 508.4 Separation of Occupancies

	Occupancy Proposed	Stories		Occupancy		HRS */ F.S.	
RESIDENCE	R3	2		**R3**		**0**	**0**

* Check Footnotes that May Apply
c. Section 406.3.4

Chapter 4 - Special Requirements

406 Motor Related Occupancies

Yes 420.2 Separation between R2 occupancies with 1 hour fire partition as per 708

Yes 420.3 Horizontal Separation- Separation between units shall be 1 hour.

Chapter 6- Construction Type

Table 601		Table 601			
Occupancy	Type	Fire-Rating per Occupancy*			R3
R3	**VB**	Type:			VB
		Structural Frame			0
		Bearing Walls Ext.			0
		Bearing Walls Int.			0
		Nonbearing walls & part at ext.			
		Nonbearing walls & part at int.			0
		Floor Construction + Second. members			0
		Roof Construction + Second. members			0

* Check footnotes that might apply

Table 602: Fire Resistance for Exterior wall/Fire Separation Distance

	Fire Separ.	Const. Type			R3		
Yes	x<5	All			1		
Yes	5≤x<10	IA, Others			1		
N/A	10≤x<30	IA, VA			1*		
Yes	x≥30	All			0		

Chapter 5 - General Building Heights and Areas Strategy

IBC 2015: Table 504.3, 504.4, 506.2

Mark which Strategy Taken:	Occ	IA, VA H_t Height (ft)	IA, VA S_t Story	IA/ VA A_t Area (sf)	A_a Area (sf)	A_a Area (sf)
Accesory Occ:						
Incidental Acc. Occ:	R3	55	4*	UNLIMITED		1,332
X Single Occ:						
Mixed Occ:						
Nonseparated Uses:		Insert each A_t				
Separated Uses:	* 4 STORIES ALLOWED WITH FIRE SPRINKLERS PER NFPR 13 OR 13R					

R1OCCUPANCY -

506.1 Area Calculation **(Total Building)**

Aa = At + At If + At Is

Aa = Allowable Area per Floor
At = Tabular Area per Table 503 (square feet)
If = Area increase due to frontage
Is = Area increase due to sprinkler protection

At = UNLIMITED Table 503: Type V-B, Group R3 NFPA 13R
If = 0.00 Sec. 506.2 See calculation below
Is = 0 Sec. 506.3 Fully Sprinkled: 200% for Multi-Story Building / 300% for Single Story

Aa = UNLIMITED + 0 0.0000 + 0 0

Aa = UNLIMITED + 0 + 0

Aa = UNLIMITED sf ALLOWABLE AREA PER FLOOR
x 2 Multiply by number of stories - 506.4 (Max. 300% increase)
UNLIMITED sf ALLOWABLE AREA OF BUILDING

ACTUAL AREA < ALLOWABLE AREA PER FLOOR

656 **UNLIMITED** **OK, ALLOWABLE**

ACTUAL AREA < ALLOWABLE AREA PER BUILDING

1,332 **UNLIMITED** **OK, ALLOWABLE**

506.2 Frontage Increase

If = F -0.25 W
P 30

If = Area Increase due to frontage
F = Building perimeter which fronts on a public way or open space having 20 feet minimum (feet)
P = Perimeter of entire building
W = Width of public way or open space (feet) in accordance with 506.2.1

F = 60 If
P = 102.5 If
W = 20 ft (30 FT IS THE LARGEST NUMBER THAT CAN BE USED)

If = 60 + -0.25 20
102.5 30

If = 0.585365854 + -0.25 0.666666667 = 0.333365854 0.666666667

If = 0.00 NO AREA INCREASE TAKEN FOR SIDE YARDS

(Chp. 7)- Fire-Resistance Rated Construction (List Items)

No 704.2 Column Protection:
Primary structural frame individually protected.

No 704.3 Protection of the Primary Structural Frame other than columns:
Requires individual protection when carry more than two floors or one floor and one roof.

No 704.10 Exterior Structural Members:
Requires individual protection when carry more than two floors or one floor and one roof.

705 Exterior Walls:
No 705.2 Projections: Shall not extend closer to FSD than Table 705.2.
Yes 705.2.2 Type V-B of any approved material
705.2.3 Combustible projections either: 1-hr rated construction, type V-B construction,
712 Vertical Openings:
No 712.1.2 Two-story openings: Allowed within individual dwelling unit

718 Concealed Spaces:
N/A 718.2 Fireblocking: Required throughout.

718.3 Draftstopping in floors:
N/A 718.3.3: Exception- Not required if building equipped throughout with an NFPA 13 automatic sprinkler system

718.4 Draftstopping in attics:
N/A 718.4.3: Exception- Not required if building equipped throughout with an NFPA 13 automatic sprinkler system

Chapter 8 - Finishes

Table 803.9 Interior Wall and Ceiling Finish Requirements by Occupancy: sprinklered

Group	Exiting Elements	Corridors	Rooms & enclosed Spaces
R3	B	C	C

Chapter 9 - Fire Protection Systems

903.2 Automatic Sprinkler Systems Where Required:

R3 Required.

N/A 903.3.1 FS Standards: Install FS as per 903.3.1.1, 903.3.1.2 or 903.3.1.3:

YES 903.3.1.2 NFPA 13R sprinkler systems: Group R when ≤ 4 stories in height.
903.3.1.2.1 Balconies and decks: Provide FS when bldg is of Type V const.

Yes 903.3.2 Quick-response and residential sprinklers: Install FS as per 903.3.1 in Group R dwelling units.

906.1 Portable Fire Extinguishers where required:

R3 Required per Dwelling Unit- 1-A:10-B:C

Class A, Ordinary Hazard:
Rated: 2-A
Max flr area/unit of A: 1,500 sf
Max flr area/extinguisher: 11,250 sf
Max travel distance: 75 ft.

907.2 Fire Alarm and Detection Systems- Where required: Installed as per IBC and NFPA 72

R3 907.2.8 : Not required, but exception 2 must be met

Chapter 10 - Means of Egress

Table 1004.1 - Occupant Load: See 'G' Sheets for floor plans showing occupant loads per space.

1005 Egress Width: 0.3 x OL for stairs and 0.2 x OL for other egress components- See 'G' Sheets for floor plans showing stairs and egress components and width required and provided.

1007 Accessible means of Egress

Table 1017.2 - Exit access travel distance
R3 = 200' (NFPA 13R)
= 400' (NFPA 13)
N/A 1016.1 - Unenclosed Stairs: exception #3- travel distance shall be measured from the most remote point in the building to an exit discharge.

Yes 1022 Interior exit stairways and ramps:
1- 1022.2: 1-Hr fire barrier when ≤ 4 stories.
2- Construct as per 1022.2 - 1020.10.

(Chp. 11) Accessibility

1103 Scope:
No 1103.2.3 Detached One and Two Family dwellings are exempt from Chapter 11

No 1107.7 General Exceptions
1107.2.2 Multi-story units without elevator service are not required to have Type B, and are exempt.

(Chp 12) Interior Environment

Yes 1207 Sound Transmission:
1207.3 Structure-borne Sound: Dwelling unit must be separated with a floor/celing assemblies that have an STC rating ≥ 50 (45 if field tested).

1207.2 Air-borne Sound: Dwelling unit must be separated with walls, partitions and floor/celing assemblies that have an IIC rating ≥ 50 (45 if field tested).

4 A101 Code Review
nts

building number	northwest corner natural grade elevation	northeast corner natural grade elevation	southwest corner natural grade elevation	southeast corner natural grade elevation	upper level floor elevation	height to building ridge	average building height (less than 35')
13	8790.06	8788.62	8778.31	8778.24	8803.00	8818.00	**33.85**
16	8743.17	8743.2	8735.14	8734.32	8756.00	8771.00	**32.24**
19	8818.32	8815.99	8799.67	8798.73	8828.50	8843.50	**34.975**
11	8712.48	8712.33	8705.65	8705.14	8726.00	8741.00	**32.19**
21	8723.93	8723.54	8719.22	8719.09	8737.00	8752.00	**30.49**
26	8695.63	8695.19	8686.84	8685.93	8709.00	8724.00	**33.22**
27	8713.05	8712.23	8708.14	8707.62	8727.00	8742.00	**31.665**
29	8751.05	8750.44	8739.22	8738.54	8764.50	8779.50	**34.705**

3 A101 Height Restriction Chart
Scale 1/32" = 1'-0"

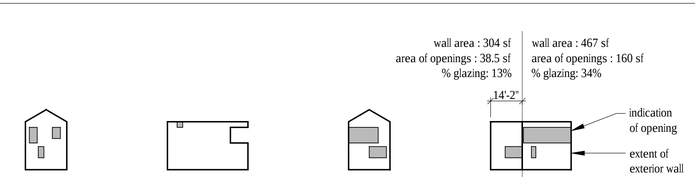

2 A101 Percentage of Openings Elevation Diagrams
Scale 1/32" = 1'-0"

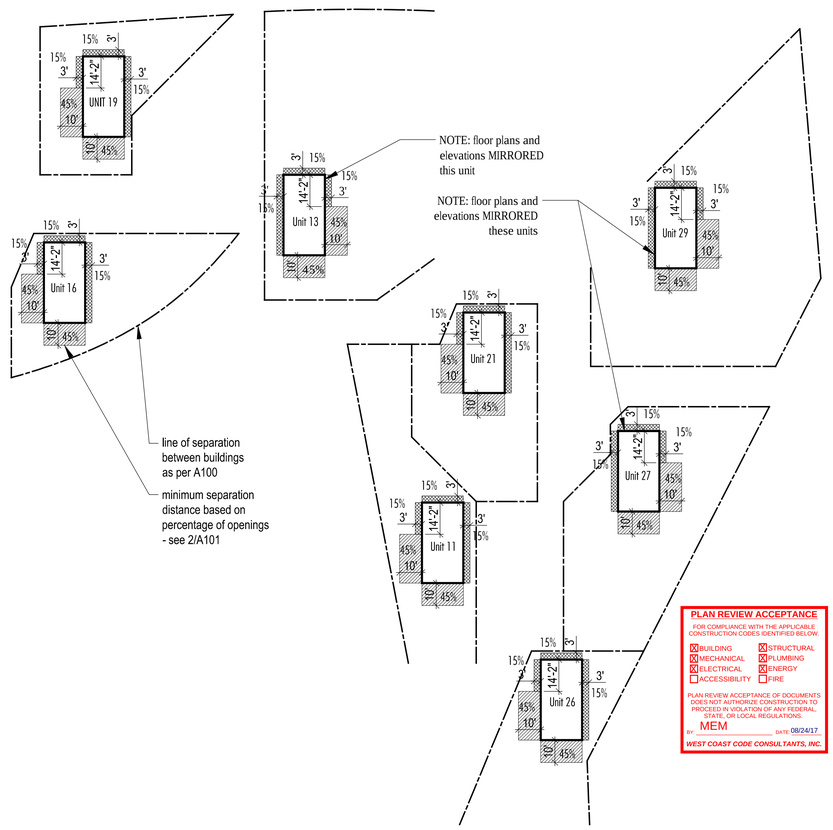

1 A101 Separation Distance Plan Diagrams
Scale 1/32" = 1'-0"

PLAN REVIEW ACCEPTANCE
FOR COMPLIANCE WITH THE APPLICABLE CONSTRUCTION CODES IDENTIFIED BELOW.
☒ BUILDING ☒ STRUCTURAL
☒ MECHANICAL ☒ PLUMBING
☒ ELECTRICAL ☒ ENERGY
☐ ACCESSIBILITY ☐ FIRE
PLAN REVIEW ACCEPTANCE OF DOCUMENTS DOES NOT AUTHORIZE CONSTRUCTION TO PROCEED IN VIOLATION OF ANY FEDERAL, STATE, OR LOCAL REGULATIONS.
BY MEM DATE 08/24/17
WEST COAST CODE CONSULTANTS, INC.

Horizon Neighborhood CABINS
Summit Powder Mountain
Eden, Utah

MacKay-Lyons Sweetappie Architects Limited
2188 Göttingen St.
Halifax, Nova Scotia
Canada B3K 3B4
ph: (902) 429.1867
fax: (902) 429.6276

true north

construction north

STATE OF UTAH
Brian MacKay-Lyons
No. 9809836
LICENSED ARCHITECT

04	Issued for Const. Rev. 2	15.08.2017
03	Issued for Const. Rev. 1	21.07.2017
02	Issued for Construction	17.03.2017
01	Issued for FDN Permit	28.10.2016
No.	Description	Date

Revision:

NOTES:

COPYRIGHT RELATED TO THE USE OF THIS DRAWING:
The use of this drawing shall be governed by standard copyright law as generally accepted in architectural practice.

ARCHITECT'S REQUIREMENTS AND APPROVALS:
It is the Builder's responsibility to notify MacKay-Lyons Sweetapple Architects Ltd. and to seek prior written approval for materials and workmanship which deviates from instructions provided by the Architect.

ENGINEER'S REQUIREMENTS AND APPROVALS:
It is the Builder's responsibility to notify MacKay-Lyons Sweetapple Architects Ltd. and to seek prior written approval for materials and workmanship which deviates from instructions provided by the Engineer.

AUTHORITIES' REQUIREMENTS AND APPROVALS:
All materials and workmanship must comply with the requirements of all authorities having jurisdication over the work. It is the Builder's responsibility to gain necessary approval from all relevant Authorities.

DIMENSIONS:
All dimensions must be verified on site. Do not scale off drawings. Plans take precedent over elevations. In the absence of dimensions, or if discrepancies exist, consult Architect. All minimum dimensions are to comply with the International Residential Code.

SHOP DRAWINGS:
Submit shop drawings to the Architect and Engineer for approval prior to manufacture of prefabricated elements of the building.

Cabin 1000
Code Review

scale: varies
date: 16-07-04
drawn: DP
chk'd: BML

A101

Horizon Neighborhood Cabins
Cabin 1000

INTERIOR FINISH SCHEDULE - WARM

	Base		North Wall		East Wall		South Wall		West Wall		Floors		Ceiling		Remarks
	Material	Finish	Material	Finish	Material	Finish	South	Finish	Material	Finish	Material	Finish	Material	Finish	
LOWER LEVEL															
Hall	WD	PTW2	n/a	n/a	GWB	PTW1	n/a	n/a	GWB	PTW1	WD3	prefinished	WD1	untreated	
Stair	WD1	untreated	WD1	untreated	WD1	untreated	n/a	n/a	WD1	untreated	WD3	prefinished	WD1	untreated	
Bedroom 1	WD	PTW2	GWB	PTW1	GWB	PTW1	GWB	PTW1	GWB	PTW1	WD3	prefinished	WD1	untreated	
Bathroom 1	WD1	sealant	GWB-W/WD1	ST2/sealant	WD1	sealant	GWB-W/WD1	ST1/sealant	GWB-W	ST2	CT2	-	WD1	sealant	See notes 2+3
Bathroom 2	WD1	sealant	GWB-W/WD1	ST2/sealant	WD1	sealant	GWB-W/WD1	ST2/sealant	GWB-W	ST2	CT2	-	WD1	sealant	See notes 2+3
Bedroom 2	WD	PTW2	GWB	PTW1	GWB	PTW1	GWB	PTW1	GWB	PTW1	WD3	prefinished	WD1	untreated	
closets+mechanical	WD	PTW2	GWB	PTW1	GWB	PTW1	GWB	PTW1	GWB	PTW1	WD3	prefinished	GWB	PTC-3	
UPPER LEVEL															
Living	WD1	untreated	n/a	n/a	WD1	untreated	glazing/WD1	n/a/untreat.	glazing	n/a	WD3	prefinished	WD1	untreated	ST wall/floor - woodstove area
Dining	WD1	untreated	WD2	treated	WD1	untreated	glazing	n/a	glazing	n/a	WD3	prefinished	WD1	untreated	See note 2.
Entry	WD1/2	untr./treat/	WD1	untreated	WD1	untreated	n/a	n/a	WD2	treated	ST1	-	WD1	untreated	See note 2.
Mudroom	WD1	sealant	WD1	untreated	WD1	untreated	WD1	untreated	WD1	untreated	ST1	-	WD1	untreated	See notes 2+3
Powder Rm	WD1	sealant	WD1	sealant	WD1	sealant	WD1	sealant	WD1	sealant	ST1	-	WD1	untreated	See notes 2+3
Kitchen	WD1	sealant	WD1/GWB-W	sealant/ST2	WD1	sealant	WD1	sealant	WD1	sealant	ST1	-	WD1	untreated	ST2 backsplash above counter
Closet	n/a	n/a	GWB	PTW1	GWB	PTW1	GWB	PTW1	GWB	PTW1	WD3	prefinished	GWB	PTC-3	

Finish Types.

Paint
- PT-1W - Benjamin Moore OC-17 White Dove - Egg Shell Finish
- PT-2W - Benjamin Moore OC-17 White Dove - Semi Gloss Finish
- PT-C1 - Benjamin Moore Decorators White - Egg Shell Finish
- PT-C2 - Benjamin Moore Decorators White - Semi Gloss Finish
- PT-C3 - Benjamin Moore Decorators White - Flat Finish (Ceilings Only)

Wood Slats
- WD1 - western red cedar, 1X4" horizontal slats, untreated
- WD2 - western red cedar, 1X2" verticall slats, treated

Engineered Wood
- WD3 - reclaimed white oak 1X4", engineered, prefinished, natural satin

Ceramic Tile
- CT1 - white subway tile 4X16
- CT2 - grey 2x2 antislip tile

Stone Tile
- ST1 - slate floor tile, 12x12, white
- ST2 - slate wall tile 4x16

Legend.

N/A	not applicable
GWB	gypsum wall board per spec.
GWB-W	waterproof sheathing as per spec.
CONC.	concrete
CT	ceramic tile
ST	stone tile
WD	wood
GLZ	glazing

Notes.
1. "North" is top of drawing page for wall designations
2. Wood wall cladding shall extend from finished floor to u/s ceiling.
3. All wood surface cladding in bathrooms + mudroom to receive clear sealant, low sheen.

2 A102 Room Finish Schedule - UPGRADE OPTION (warm scheme)
Scale NTS

Horizon Neighborhood Cabins
Cabin 1000

INTERIOR FINISH SCHEDULE - COOL

	Base		North Wall		East Wall		South Wall		West Wall		Floors		Ceiling		Remarks
	Material	Finish	Material	Finish	Material	Finish	South	Finish	Material	Finish	Material	Finish	Material	Finish	
LOWER LEVEL															
Hall	WD	PTC2	GWB	PTC1	GWB	PTC1	GWB	PTC1	n/a	n/a	CONC.	sealed	WD1	clear	
Stair	WD1	untreated	WD1	untreated	WD1	untreated	n/a	n/a	WD1	untreated	WD3	satin	WD1	clear	
Bedroom 1	WD	PTC2	GWB	PTC1	GWB	PTC1	GWB	PTC1	GWB	PTC1	CONC.	sealed	WD1	clear	
Bathroom 1	TILE	CT1	GWB-W	CT1	GWB-W	CT1	GWB-W	CT1	GWB-W	CT1	CONC./TILE	sealed	WD1	clear	grey 2x2 antislip tile shower base
Bathroom 2	TILE	CT1	GWB-W	CT1	GWB-W	CT1	GWB-W	CT1	GWB-W	CT1	CONC./TILE	sealed	WD1	clear	grey 2x2 antislip tile shower base
Bedroom 2	WD	PTC2	GWB	PTC1	GWB	PTC1	GWB	PTC1	GWB	PTC1	CONC.	sealed	WD1	clear	
Closets	n/a	n/a	GWB	PTC1	GWB	PTC1	GWB	PTC1	GWB	PTC1	CONC.	sealed	GWB	PTC1	
UPPER LEVEL															
Living	n/a	n/a	n/a	n/a	WD1	untreated	glazing	n/a	glazing	n/a	CONC.	sealed	WD1	clear	painted steel behind woodstove
Dining	n/a	n/a	WD2	untreated	WD1	untreated	glazing	n/a	glazing	n/a	CONC.	sealed	WD1	clear	See note 2.
Entry	WD2/WD1	treat./untr.	glazing	n/a	WD1	untreated	n/a	n/a	WD2	treated	CONC.	troweled+sealed	GWB	PTC3	See note 2.
Mudroom	WD	PTC2	GWB	PTC1	n/a	n/a	GWB	PTC1	GWB	PTC1	CONC.	sealed	GWB	PTC3	
Powder Rm	TILE	CT1	GWB	CT1	GWB	CT1	GWB	CT1	GWB	CT1	CONC.	sealed	GWB	PTC3	
Kitchen	WD	PTC2	GWB	PTC1/CT1	GWB	PTC1	GWB	PTC1	GWB	PTC1	CONC.	sealed	GWB	PTC3	CT1 backsplash above counter
Closet	n/a	n/a	GWB	PTC1	GWB	PTC1	GWB	PTC1	GWB	PTC1	CONC.	sealed	GWB	PTC1	

Finish Types.

Paint
- PT-1W - Benjamin Moore OC-17 White Dove - Egg Shell Finish
- PT-2W - Benjamin Moore OC-17 White Dove - Semi Gloss Finish
- PT-C1 - Benjamin Moore Decorators White - Egg Shell Finish
- PT-C2 - Benjamin Moore Decorators White - Semi Gloss Finish
- PT-C3 - Benjamin Moore Decorators White - Flat Finish (Ceilings Only)

Wood Slats
- WD1 - western red cedar, 1X4" horizontal slats, untreated
- WD2 - western red cedar, 1X2" vertical slats, treated
- WD3 - douglas fir, 1x4" prefinished, natural satin

Concrete
- CONC. - sealed concrete

Ceramic Tile
- CT1 - white subway tile 4X16
- CT2 - grey 2x2 antislip tile

Legend.

N/A	not applicable
GWB	gypsum wall board per spec.
GWB-W	waterproof sheathing as per spec.
CONC.	concrete
CT	ceramic tile
ST	stone tile
WD	wood
GLZ	glazing

Notes.
1. "North" is top of drawing page for wall designations
2. Wood wall cladding shall extend from finished floor to u/s ceiling.
3. All wood surface cladding in bathrooms + mudroom to receive clear sealant, low sheen.

PLAN REVIEW ACCEPTANCE
FOR COMPLIANCE WITH THE APPLICABLE CONSTRUCTION CODES IDENTIFIED BELOW
- [X] BUILDING
- [X] MECHANICAL
- [X] ELECTRICAL
- [ ] ACCESSIBILITY
- [X] STRUCTURAL
- [X] PLUMBING
- [X] ENERGY
- [ ] FIRE

PLAN REVIEW ACCEPTANCE OF DOCUMENTS DOES NOT AUTHORIZE CONSTRUCTION TO PROCEED IN VIOLATION OF ANY FEDERAL, STATE, OR LOCAL REGULATIONS.
BY: MEM DATE: 08/24/17
WEST COAST CODE CONSULTANTS, INC.

1 A102 Room Finish Schedule - BASE OPTION (cool scheme)
Scale NTS

Horizon Neighborhood CABINS
Summit Powder Mountain
Eden, Utah

MacKay-Lyons Sweetapple Architects Limited
2188 Gottingen St.
Halifax, Nova Scotia
Canada B3K 3B4
ph: (902) 429.1867
fax: (902) 429.6276

STATE OF UTAH
Brian MacKay-Lyons
No. 9809836
LICENSED ARCHITECT

No.	Description	Date
02	Issued for Const. Rev. 1	21.07.2017
01	Issued for Construction	17.03.2017

Revision:

NOTES:

COPYRIGHT RELATED TO THE USE OF THIS DRAWING:
The use of this drawing shall be governed by standard copyright law as generally accepted in architectural practice.

ARCHITECT'S REQUIREMENTS AND APPROVALS:
It is the Builder's responsibility to notify MacKay-Lyons Sweetapple Architects Ltd. and to seek prior written approval for materials and workmanship which deviates from instructions provided by the Architect.

ENGINEER'S REQUIREMENTS AND APPROVALS:
It is the Builder's responsibility to notify MacKay-Lyons Sweetapple Architects Ltd. and to seek prior written approval for materials and workmanship which deviates from instructions provided by the Engineer.

AUTHORITIES' REQUIREMENTS AND APPROVALS:
All materials and workmanship must comply with the requirements of all authorities having jurisdication over the work. It is the Builder's responsibility to gain necessary approval from all relevant Authorities.

DIMENSIONS:
All dimensions must be verified on site. Do not scale off drawings. Plans take precedent over elevations. In the absence of dimensions, or if discrepancies exist, consult Architect. All minimum dimensions are to comply with the International Residential Code.

SHOP DRAWINGS:
Submit shop drawings to the Architect and Engineer for approval prior to manufacture of prefabricated elements of the building.

Cabin 1000

Room Finish Schedules

scale: varies
date: 16-07-04
drawn: DP
chk'd: BML

A102

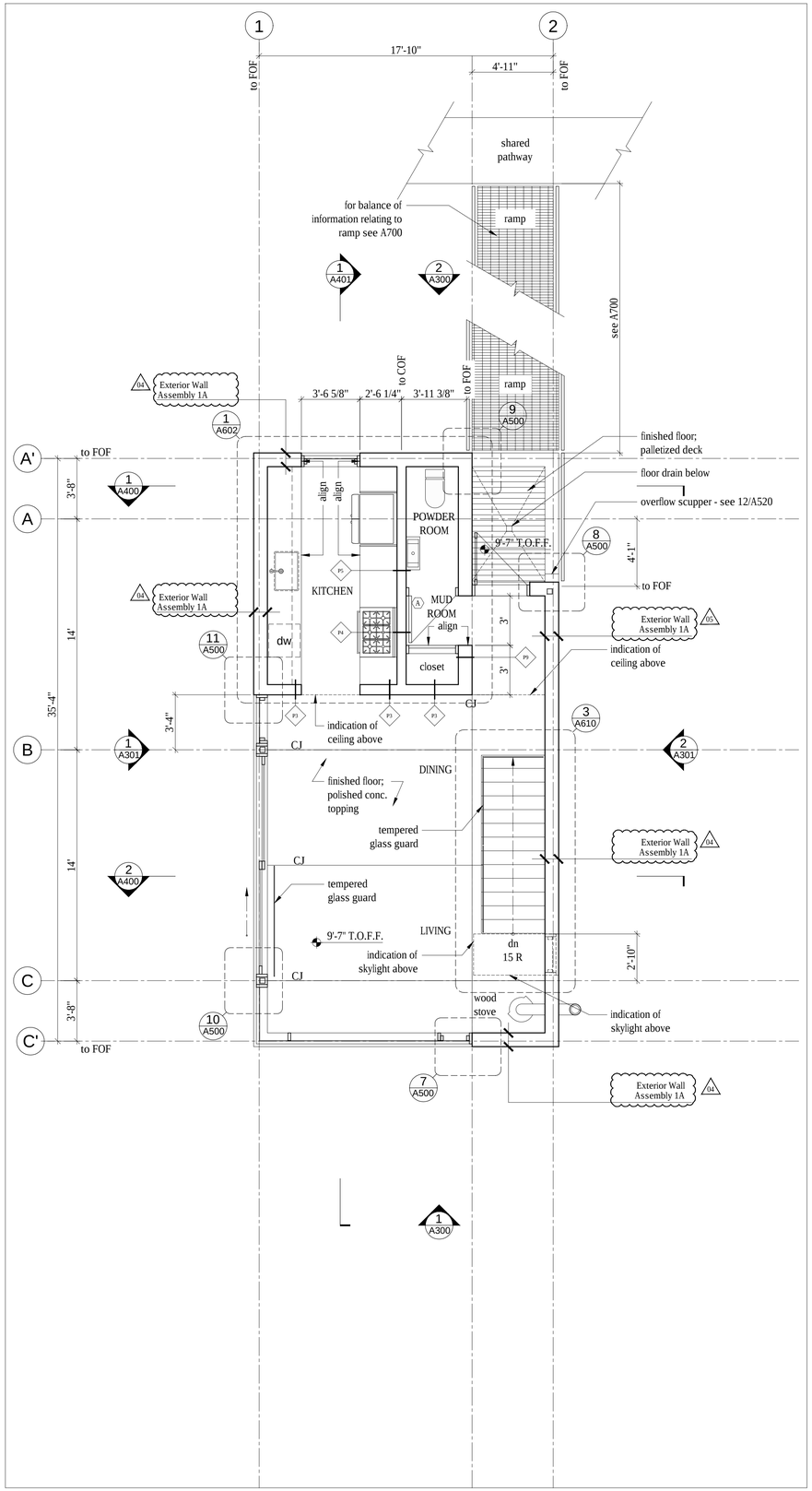

3 A200 **Floor Plan Main**
Scale 1/4" = 1'-0"

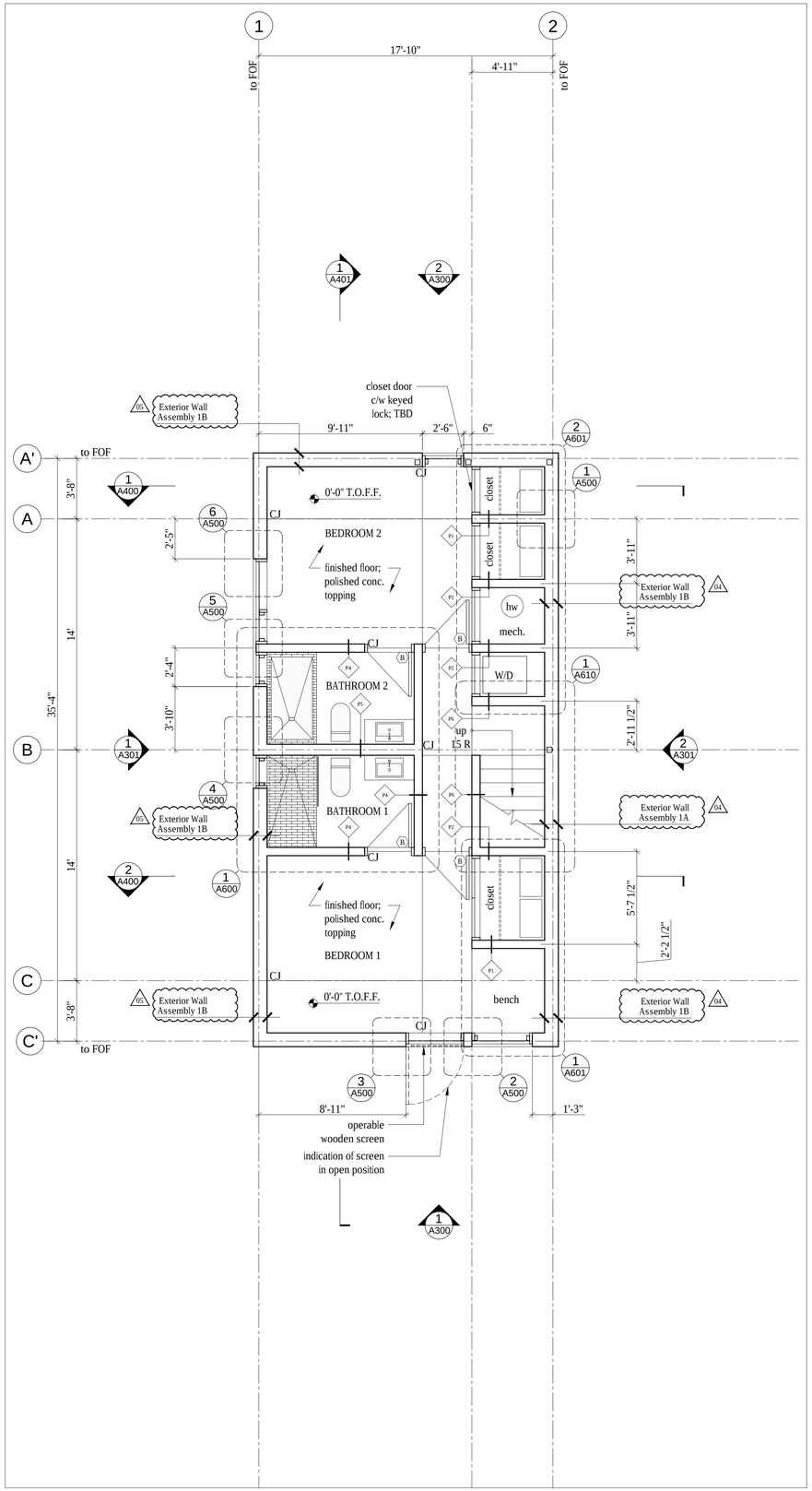

2 A200 **Floor Plan Lower**
Scale 1/4" = 1'-0"

LEGEND

- ℄ Center line
- (X) Door type
- PX Partition type

LIVABLE SQUARE FOOTAGES

Floor Plan Lower:	578 square feet
Floor Plan Upper:	495 square feet
Total:	1073 square feet

Horizon Neighborhood CABINS
Summit Powder Mountain
Eden, Utah

MacKay-Lyons Sweetappie Architects Limited
2188 Gottingen St.
Halifax, Nova Scotia
Canada B3K 3B4
ph: (902) 429.1867
fax: (902) 429.6276

true north

construction north

STATE OF UTAH
Brian MacKay-Lyons
No. 9809836
LICENSED ARCHITECT

No.	Description	Date
04	Issued for Const. Rev. 2	15.08.2017
03	Issued for Const. Rev. 1	21.07.2017
02	Issued for Construction	17.03.2017
01	Issued for FDN Permit	28.10.2016

Revision:

NOTES:

COPYRIGHT RELATED TO THE USE OF THIS DRAWING:
The use of this drawing shall be governed by standard copyright law as generally accepted in architectural practice.

ARCHITECT'S REQUIREMENTS AND APPROVALS:
It is the Builder's responsibility to notify MacKay-Lyons Sweetapple Architects Ltd. and to seek prior written approval for materials and workmanship which deviates from instructions provided by the Architect.

ENGINEER'S REQUIREMENTS AND APPROVALS:
It is the Builder's responsibility to notify MacKay-Lyons Sweetapple Architects Ltd. and to seek prior written approval for materials and workmanship which deviates from instructions provided by the Engineer.

AUTHORITIES' REQUIREMENTS AND APPROVALS:
All materials and workmanship must comply with the requirements of all authorities having jurisdication over the work. It is the Builder's responsibility to gain necessary approval from all relevant Authorities.

DIMENSIONS:
All dimensions must be verified on site. Do not scale off drawings. Plans take precedent over elevations. In the absence of dimensions, or if discrepancies exist, consult Architect. All minimum dimensions are to comply with the International Residential Code.

SHOP DRAWINGS:
Submit shop drawings to the Architect and Engineer for approval prior to manufacture of prefabricated elements of the building.

PLAN REVIEW ACCEPTANCE

FOR COMPLIANCE WITH THE APPLICABLE CONSTRUCTION CODES IDENTIFIED BELOW.

- [X] BUILDING
- [X] MECHANICAL
- [X] ELECTRICAL
- [ ] ACCESSIBILITY
- [X] STRUCTURAL
- [X] PLUMBING
- [X] ENERGY
- [ ] FIRE

PLAN REVIEW ACCEPTANCE OF DOCUMENTS DOES NOT AUTHORIZE CONSTRUCTION TO PROCEED IN VIOLATION OF ANY FEDERAL, STATE, OR LOCAL REGULATIONS.

BY: MEM DATE: 08/24/17

WEST CODE CONSULTANTS, INC.

Cabin 1000
Floor Plans

scale: 1/4" = 1'-0"
date: 16-04-20
drawn: MJ/JL
chk'd: BML

A200

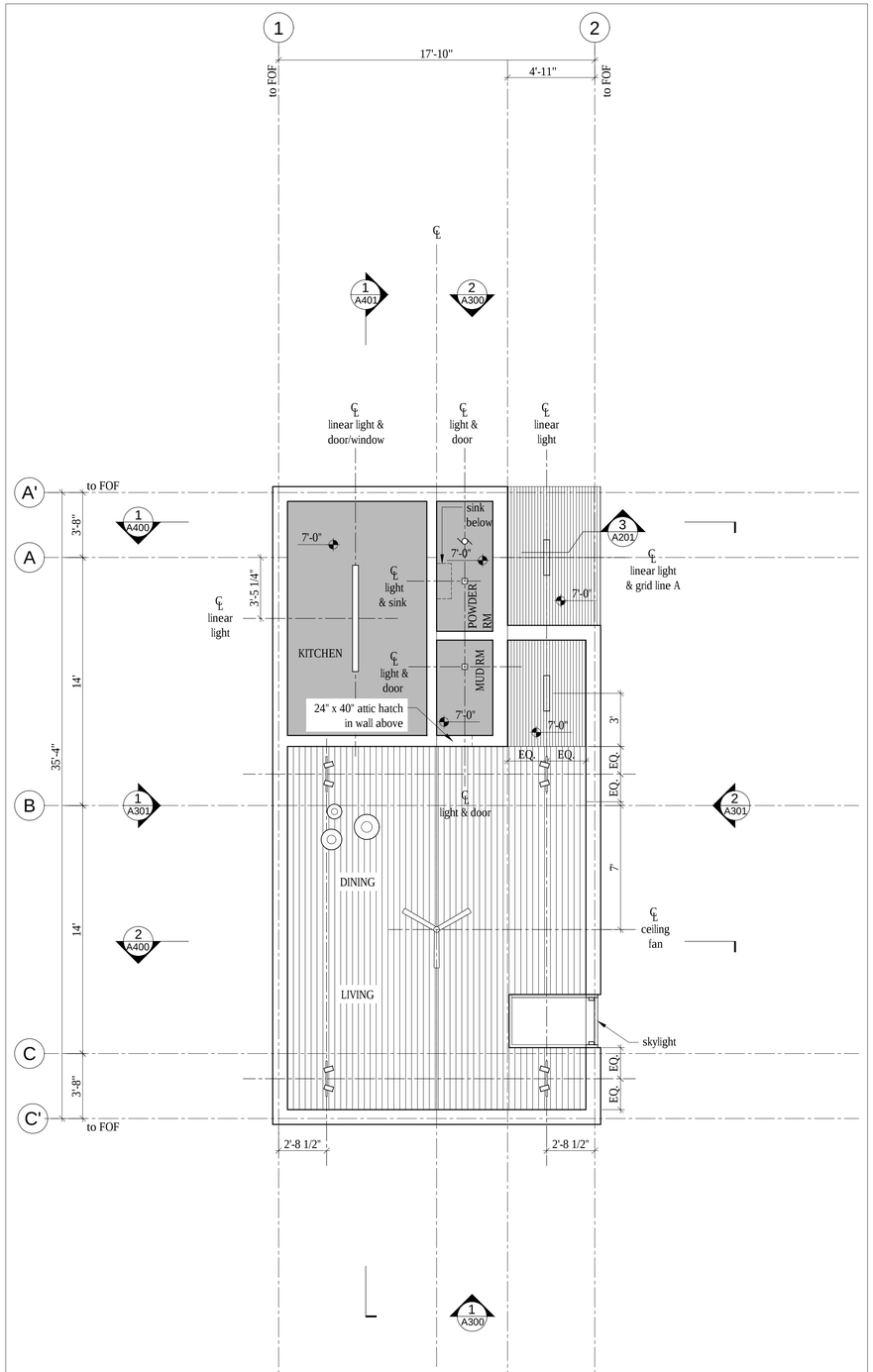

2 A201 **Reflected Ceiling Plan Main**
Scale 1/4" = 1'-0"

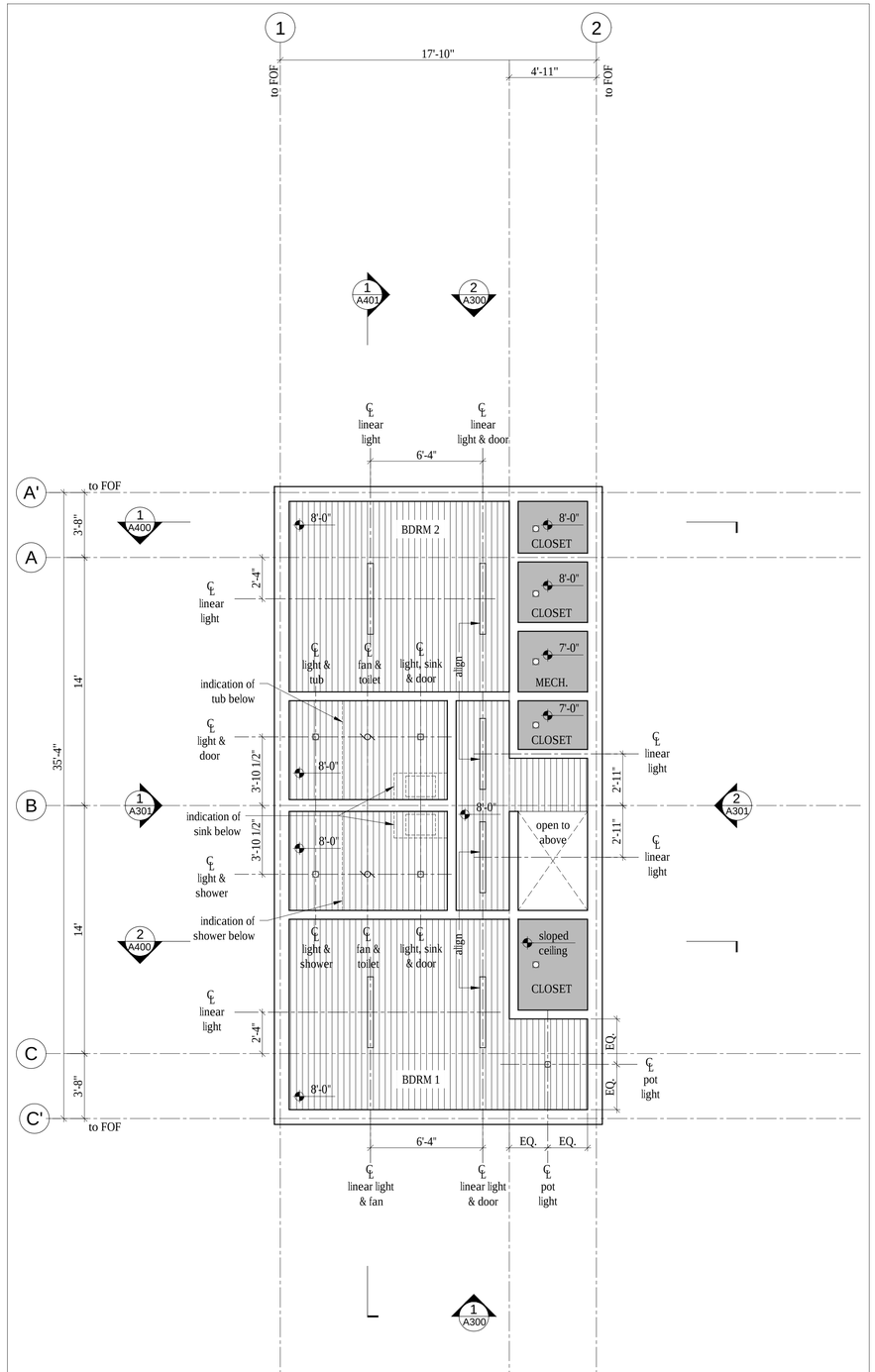

1 A201 **Reflected Ceiling Plan Lower**
Scale 1/4" = 1'-0"

LEGEND

Symbols

- ℄ Center line
- LED downlight
- Recessed LED pot light; inline w/ shiplap ceiling boards
- Linear LED pendant light
- Spherical pendant light cluster
- Linear LED light fixture; inline w/ shiplap ceiling boards; length varies (see elec.)
- track lights on 2' long track

Ceiling Finishes

- 1x4 shiplap wood cladding - type 1 - see A001
- 1x4 shiplap wood cladding - type 2 - see A001
- Painted GWB

MECHANICAL

- bathroom fan
- ceiling fan

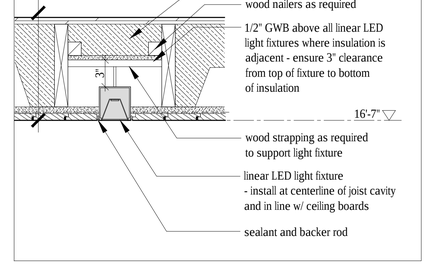

3 A201 **Linear Light Detail at Insulated Condition**
Scale 1-1/2" = 1'-0"

NOTE:

1. Where applicable, all ceiling mounted light fixtures to be in-line with shiplap boards unless otherwise noted.

2. Where alignment of light fixtures as noted and 'note 1' are contradictory note 1 takes precedent.

3. All finished ceiling heights dimensioned from top of finished floor below.

4. All lighting to be dimmable.

PLAN REVIEW ACCEPTANCE
FOR COMPLIANCE WITH THE APPLICABLE CONSTRUCTION CODES IDENTIFIED BELOW.

[X] BUILDING	[X] STRUCTURAL
[X] MECHANICAL	[X] PLUMBING
[X] ELECTRICAL	[X] ENERGY
[ ] ACCESSIBILITY	[ ] FIRE

PLAN REVIEW ACCEPTANCE OF DOCUMENTS DOES NOT AUTHORIZE CONSTRUCTION TO PROCEED IN VIOLATION OF ANY FEDERAL, STATE, OR LOCAL REGULATIONS.
BY: MEM DATE: 08/24/17
WEST COAST CODE CONSULTANTS, INC.

Horizon Neighborhood
CABINS
Summit Powder Mountain
Eden, Utah

MacKay-Lyons Sweetapple Architects Limited
2188 Gottingen St.
Halifax, Nova Scotia
Canada B3K 3B4
ph: (902) 429.1867
fax: (902) 429.6276

STATE OF UTAH
Brian MacKay-Lyons
No. 9809836
LICENSED ARCHITECT

No.	Description	Date
02	Issued for Const. Rev. 1	21.07.2017
01	Issued for Construction	17.03.2017

Revision:

NOTES:

COPYRIGHT RELATED TO THE USE OF THIS DRAWING:
The use of this drawing shall be governed by standard copyright law as generally accepted in architectural practice.

ARCHITECT'S REQUIREMENTS AND APPROVALS:
It is the Builder's responsibility to notify MacKay-Lyons Sweetapple Architects Ltd. and to seek prior written approval for materials and workmanship which deviates from instructions provided by the Architect.

ENGINEER'S REQUIREMENTS AND APPROVALS:
It is the Builder's responsibility to notify MacKay-Lyons Sweetapple Architects Ltd. and to seek prior written approval for materials and workmanship which deviates from instructions provided by the Engineer.

AUTHORITIES' REQUIREMENTS AND APPROVALS:
All materials and workmanship must comply with the requirements of all authorities having jurisdication over the work. It is the Builder's responsibilty to gain necessary approval from all relevant Authorities.

DIMENSIONS:
All dimensions must be verified on site. Do not scale off drawings. Plans take precedent over elevations. In the absence of dimensions, or if discrepancies exist, consult Architect. All minimum dimensions are to comply with the International Residential Code.

SHOP DRAWINGS:
Submit shop drawings to the Architect and Engineer for approval prior to manufacture of prefabricated elements of the building.

Cabin 1000

Reflected Ceiling Plans

scale: 1/4" = 1'-0"
date: 16-08-05
drawn: MJ
chk'd: BML

A201

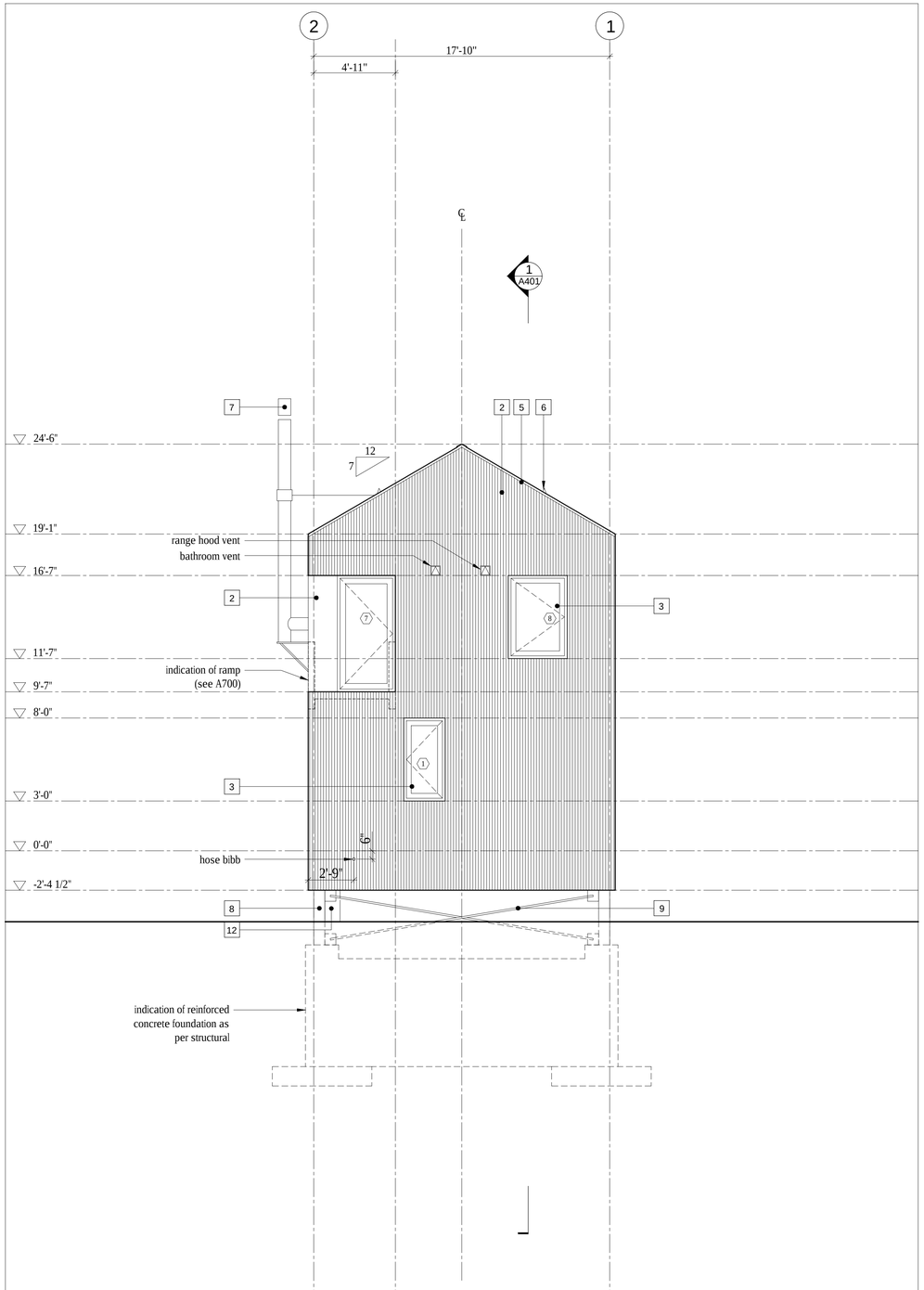

2 A300 Exterior Elevation
Scale 1/4" = 1'-0"

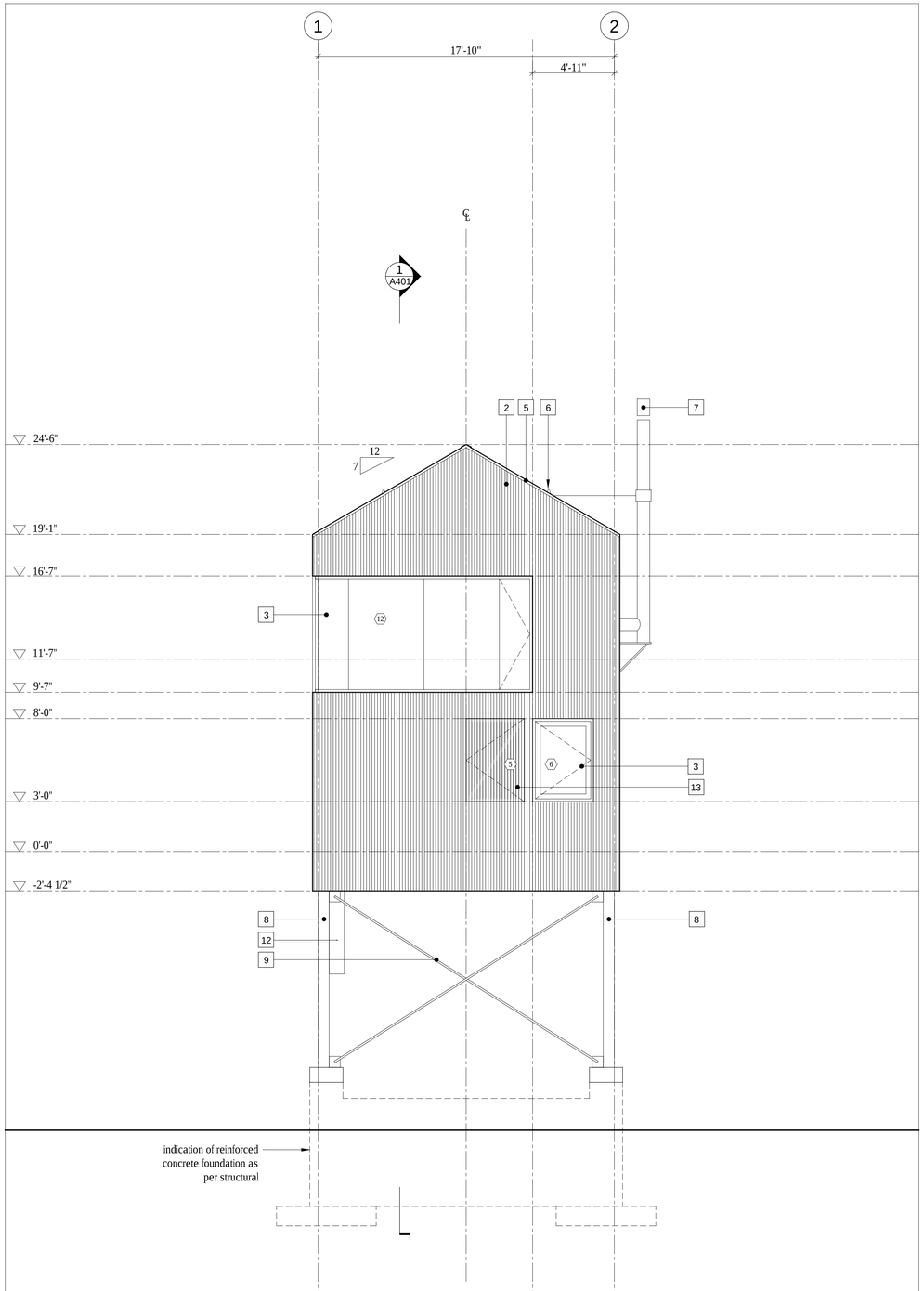

1 A300 Exterior Elevation
Scale 1/4" = 1'-0"

LEGEND

1 fire retardant pressure treated cedar shingles - 6" exposure

2 1x4 vertical shiplap wood cladding - type 1 - see A001 for profile

3 anodized aluminum framed glazing system - see window/door schedule

4 anodized aluminum framed sliding glazing system - see window/door schedule

5 clear anodized aluminum flashing

6 snow bracket

7 stainless steel chimney

8 galvanized steel column; as per structural

9 galvanized steel bracing; as per structural

10 side-mounted tempered glass guard

11 not used

12 insulated steel service chase; galvanized finish to match bracing - see mechanical for locations

13 operable wood screen over glazing

PLAN REVIEW ACCEPTANCE
FOR COMPLIANCE WITH THE APPLICABLE CONSTRUCTION CODES IDENTIFIED BELOW.
☒ BUILDING ☒ STRUCTURAL
☒ MECHANICAL ☒ PLUMBING
☒ ELECTRICAL ☒ ENERGY
☐ ACCESSIBILITY ☐ FIRE
PLAN REVIEW ACCEPTANCE OF DOCUMENTS DOES NOT AUTHORIZE CONSTRUCTION TO PROCEED IN VIOLATION OF ANY FEDERAL, STATE, OR LOCAL REGULATIONS.
BY: MEM DATE: 08/24/17
WEST COAST CODE CONSULTANTS, INC.

Horizon Neighborhood
CABINS
Summit Powder Mountain
Eden, Utah

MacKay-Lyons Sweetapple Architects Limited
2188 Gottingen St.
Halifax, Nova Scotia
Canada B3K 3B4
ph: (902) 429.1867
fax: (902) 429.6276

STATE OF UTAH
Brian MacKay-Lyons
No. 9809836
LICENSED ARCHITECT

No.	Description	Date
03	issued for Const. Rev. 1	21.07.2017
02	issued for Construction	17.03.2017
01	issued for FDN Permit	28.10.2016

Revision:

NOTES:

COPYRIGHT RELATED TO THE USE OF THIS DRAWING:
The use of this drawing shall be governed by standard copyright law as generally accepted in architectural practice.

ARCHITECT'S REQUIREMENTS AND APPROVALS:
It is the Builder's responsibility to notify MacKay-Lyons Sweetapple Architects Ltd. and to seek prior written approval for materials and workmanship which deviates from instructions provided by the Architect.

ENGINEER'S REQUIREMENTS AND APPROVALS:
It is the Builder's responsibility to notify MacKay-Lyons Sweetapple Architects Ltd. and to seek prior written approval for materials and workmanship which deviates from instructions provided by the Engineer.

AUTHORITIES' REQUIREMENTS AND APPROVALS:
All materials and workmanship must comply with the requirements of all authorities having jurisdiction over the work. It is the Builder's responsibility to gain necessary approval from all relevant Authorities.

DIMENSIONS:
All dimensions must be verified on site. Do not scale off drawings. Plans take precedent over elevations. In the absence of dimensions, or if discrepancies exist, consult Architect. All minimum dimensions are to comply with the International Residential Code.

SHOP DRAWINGS:
Submit shop drawings to the Architect and Engineer for approval prior to manufacture of prefabricated elements of the building.

Cabin 1000

Exterior Elevations

scale: 1/4" = 1'-0"
date: 16-04-20
drawn: MJ/JL
chk'd: BML

A300

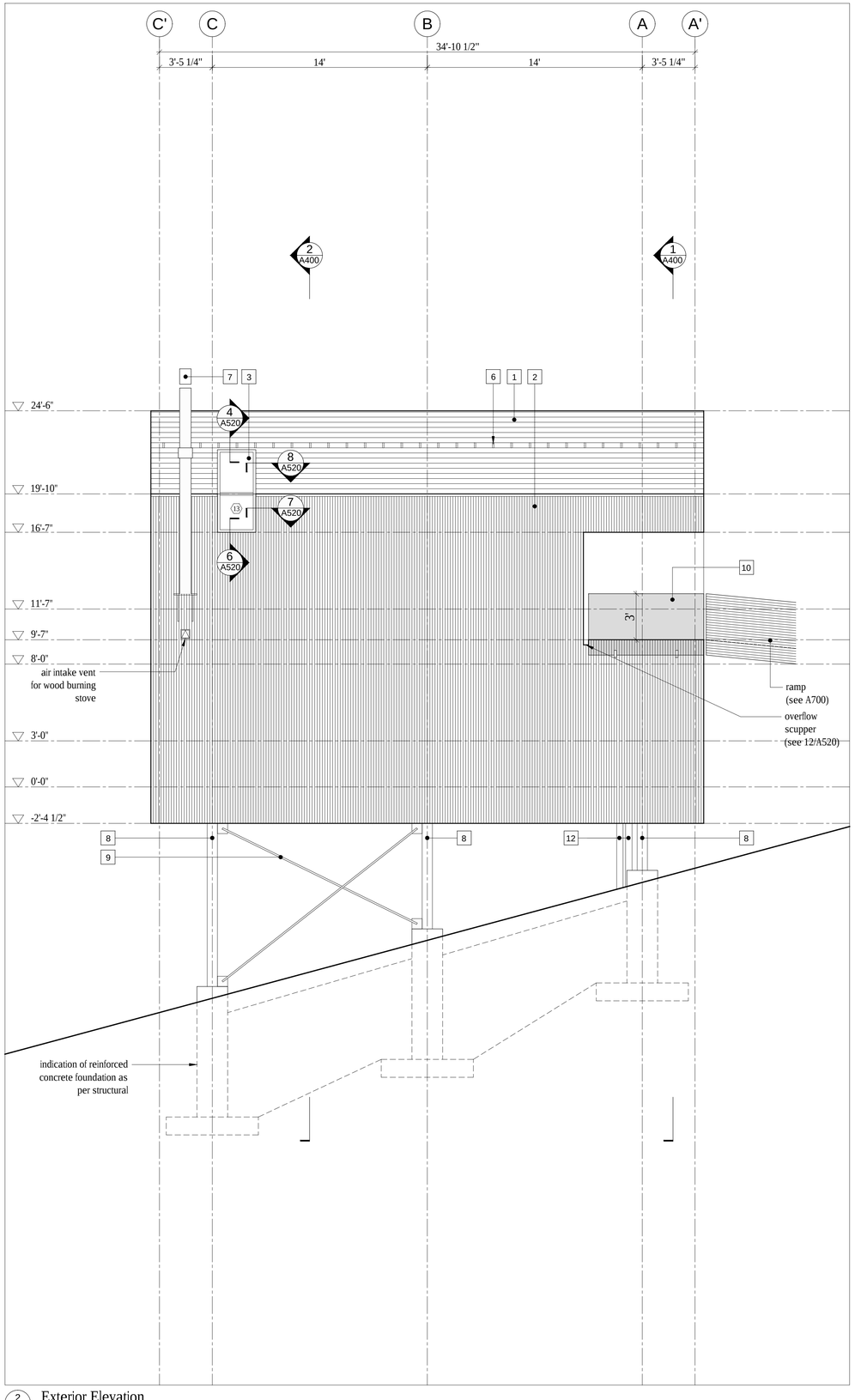

2 A301 Exterior Elevation
Scale 1/4" = 1'-0"

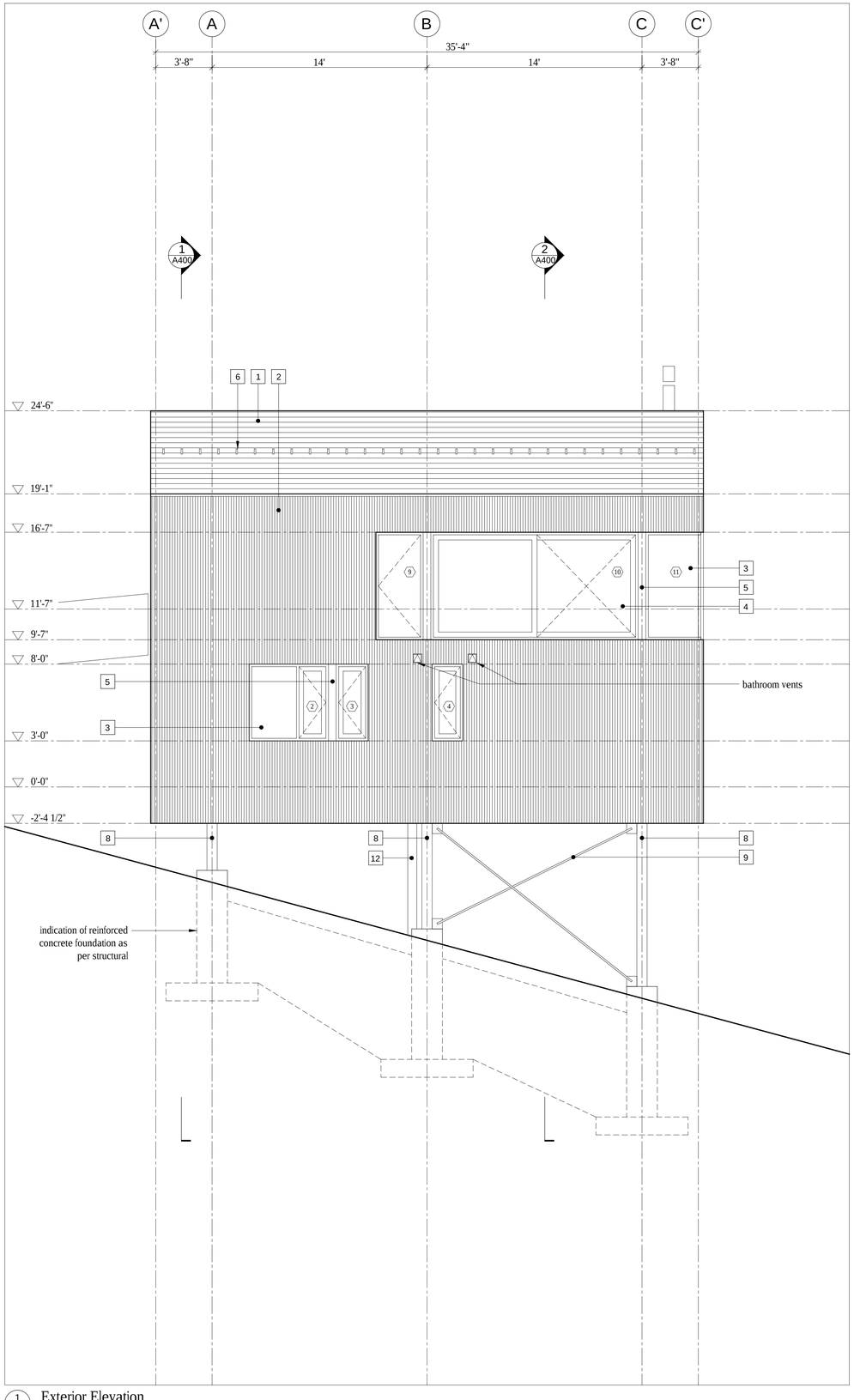

1 A301 Exterior Elevation
Scale 1/4" = 1'-0"

LEGEND

1 fire retardant pressure treated cedar shingles - 6" exposure

2 1x4 vertical shiplap wood cladding - type 1 - see A001 for profile

3 anodized aluminum framed glazing system - see window/door schedule

4 anodized aluminum framed sliding glazing system - see window/door schedule

5 clear anodized aluminum flashing

6 snow bracket

7 stainless steel chimney

8 galvanized steel column; as per structural

9 galvanized steel bracing; as per structural

10 side-mounted tempered glass guard

11 not used

12 insulated steel service chase; galvanized finish to match bracing - see mechanical for locations

13 operable wood screen over glazing

PLAN REVIEW ACCEPTANCE

FOR COMPLIANCE WITH THE APPLICABLE CONSTRUCTION CODES IDENTIFIED BELOW.

- [X] BUILDING
- [X] MECHANICAL
- [X] ELECTRICAL
- [ ] ACCESSIBILITY
- [X] STRUCTURAL
- [X] PLUMBING
- [X] ENERGY
- [ ] FIRE

PLAN REVIEW ACCEPTANCE OF DOCUMENTS DOES NOT AUTHORIZE CONSTRUCTION TO PROCEED IN VIOLATION OF ANY FEDERAL, STATE, OR LOCAL REGULATIONS.

BY MEM DATE 08/24/17

WEST COAST CODE CONSULTANTS, INC.

Horizon Neighborhood
CABINS

Summit Powder Mountain
Eden, Utah

MacKay-Lyons Sweetapple Architects Limited

2188 Göttingen St.
Halifax, Nova Scotia
Canada B3K 3B4

ph: (902) 429.1867
fax: (902) 429.6276

STATE OF UTAH
Brian MacKay-Lyons
No. 9809836
LICENSED ARCHITECT

No.	Description	Date
03	Issued for Const. Rev. 1	21.07.2017
02	Issued for Construction	17.03.2017
01	Issued for FDN Permit	28.10.2016

Revision:

NOTES:

COPYRIGHT RELATED TO THE USE OF THIS DRAWING:
The use of this drawing shall be governed by standard copyright law as generally accepted in architectural practice.

ARCHITECT'S REQUIREMENTS AND APPROVALS:
It is the Builder's responsibility to notify MacKay-Lyons Sweetapple Architects Ltd. and to seek prior written approval for materials and workmanship which deviates from instructions provided by the Architect.

ENGINEER'S REQUIREMENTS AND APPROVALS:
It is the Builder's responsibility to notify MacKay-Lyons Sweetapple Architects Ltd. and to seek prior written approval for materials and workmanship which deviates from instructions provided by the Engineer.

AUTHORITIES' REQUIREMENTS AND APPROVALS:
All materials and workmanship must comply with the requirements of all authorities having jurisdication over the work. It is the Builder's responsibilty to gain necessary approval from all relevant Authorities.

DIMENSIONS:
All dimensions must be verified on site. Do not scale off drawings. Plans take precedent over elevations. In the absence of dimensions, or if discrepancies exist, consult Architect. All minimum dimensions are to comply with the International Residential Code.

SHOP DRAWINGS:
Submit shop drawings to the Architect and Engineer for approval prior to manufacture of prefabricated elements of the building.

Cabin 1000

Exterior Elevations

scale: 1/4" = 1'-0"
date: 16-04-20
drawn: MJ/JL
chk'd: BML

A301

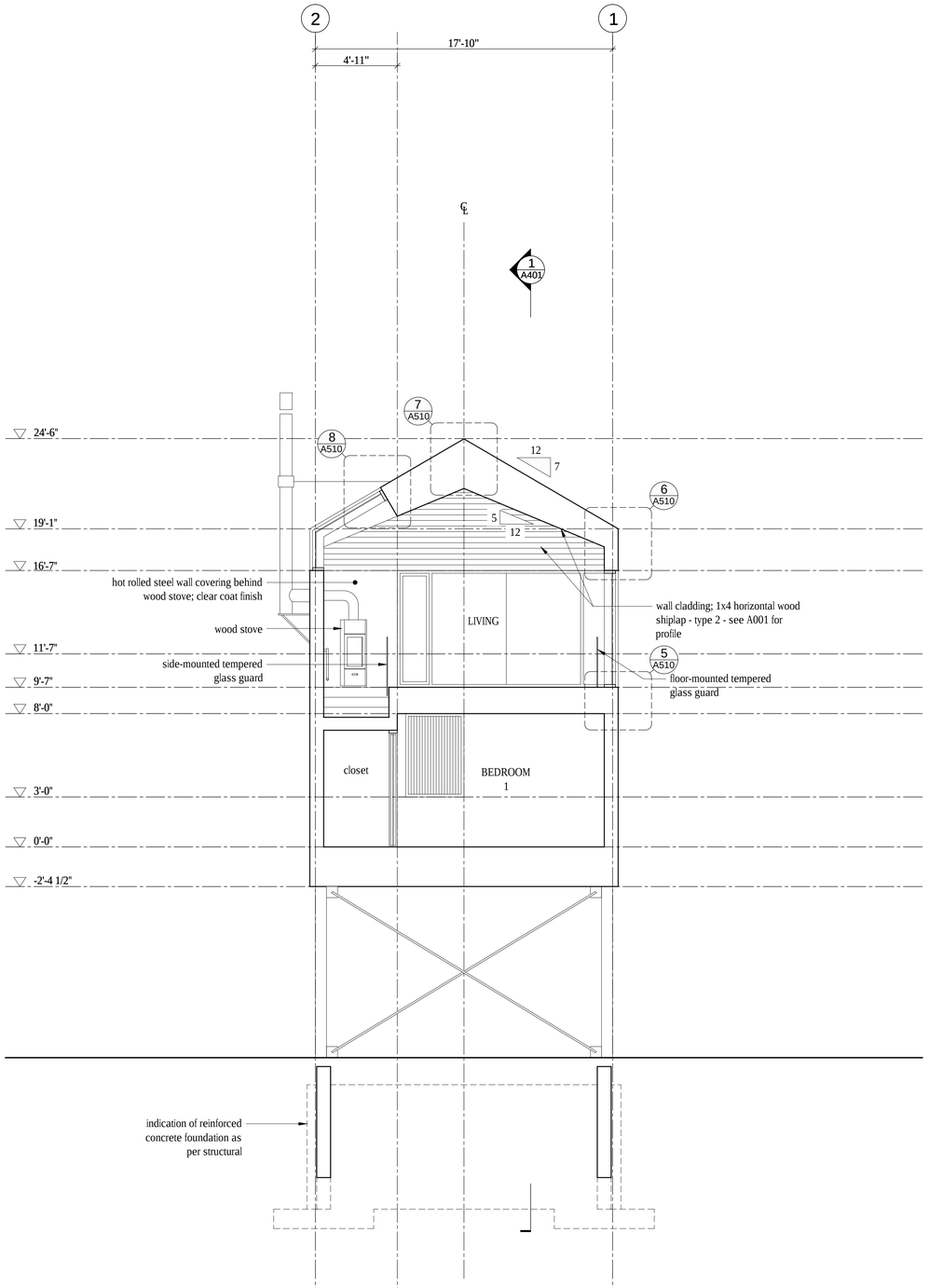

2 A400 Cross Section
Scale 1/4" = 1'-0"

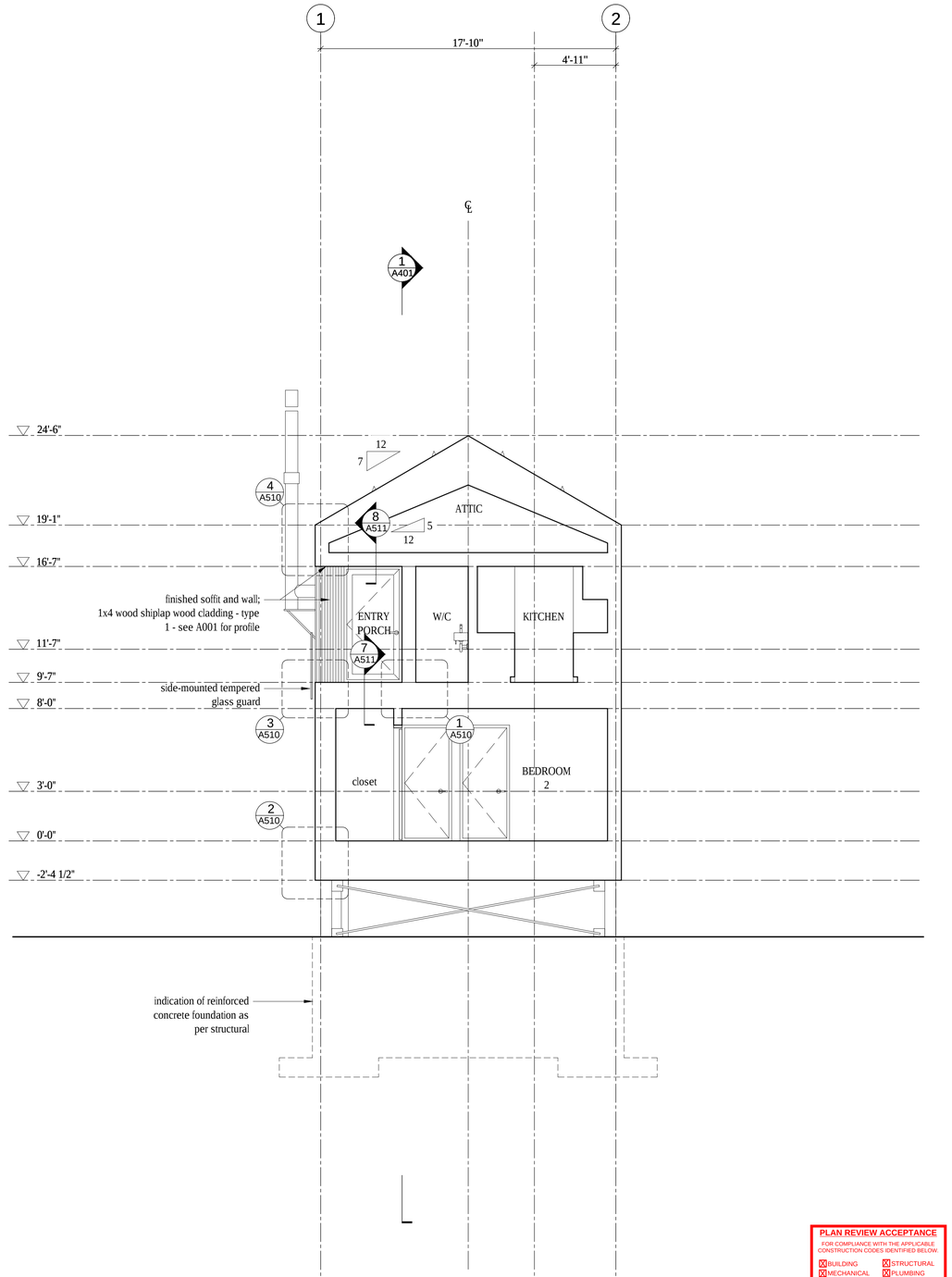

1 A400 Cross Section
Scale 1/4" = 1'-0"

PLAN REVIEW ACCEPTANCE

FOR COMPLIANCE WITH THE APPLICABLE CONSTRUCTION CODES IDENTIFIED BELOW.

☒ BUILDING	☒ STRUCTURAL
☒ MECHANICAL	☒ PLUMBING
☒ ELECTRICAL	☒ ENERGY
☐ ACCESSIBILITY	☐ FIRE

PLAN REVIEW ACCEPTANCE OF DOCUMENTS DOES NOT AUTHORIZE CONSTRUCTION TO PROCEED IN VIOLATION OF ANY FEDERAL, STATE, OR LOCAL REGULATIONS.

BY: MEM DATE: 08/24/17

WEST COAST CODE CONSULTANTS, INC.

Horizon Neighborhood
CABINS

Summit Powder Mountain
Eden, Utah

MacKay-Lyons
Sweetapple

Architects
Limited

2188 Gottingen St.
Halifax, Nova Scotia
Canada B3K 3B4

ph: (902) 429.1867
fax: (902) 429.6276

STATE OF UTAH
Brian MacKay-Lyons
No. 9809836
LICENSED ARCHITECT

See A102 for room finish schedule

No.	Description	Date
03	Issued for Const. Rev. 1	21.07.2017
02	Issued for Construction	17.03.2017
01	Issued for FDN Permit	28.10.2016

Revision:

NOTES:

COPYRIGHT RELATED TO THE USE OF THIS DRAWING:
The use of this drawing shall be governed by standard copyright law as generally accepted in architectural practice.

ARCHITECT'S REQUIREMENTS AND APPROVALS:
It is the Builder's responsibility to notify MacKay-Lyons Sweetapple Architects Ltd. and to seek prior written approval for materials and workmanship which deviates from instructions provided by the Architect.

ENGINEER'S REQUIREMENTS AND APPROVALS:
It is the Builder's responsibility to notify MacKay-Lyons Sweetapple Architects Ltd. and to seek prior written approval for materials and workmanship which deviates from instructions provided by the Engineer.

AUTHORITIES' REQUIREMENTS AND APPROVALS:
All materials and workmanship must comply with the requirements of all authorities having jurisdication over the work. It is the Builder's responsibility to gain necessary approval from all relevant Authorities.

DIMENSIONS:
All dimensions must be verified on site. Do not scale off drawings. Plans take precedent over elevations. In the absence of dimensions, or if discrepancies exist, consult Architect. All minimum dimensions are to comply with the International Residential Code.

SHOP DRAWINGS:
Submit shop drawings to the Architect and Engineer for approval prior to manufacture of prefabricated elements of the building.

Cabin 1000

Building Sections

scale: 1/4" = 1'-0"
date: 16-04-20
drawn: MJ/JL
chk'd: BML

A400

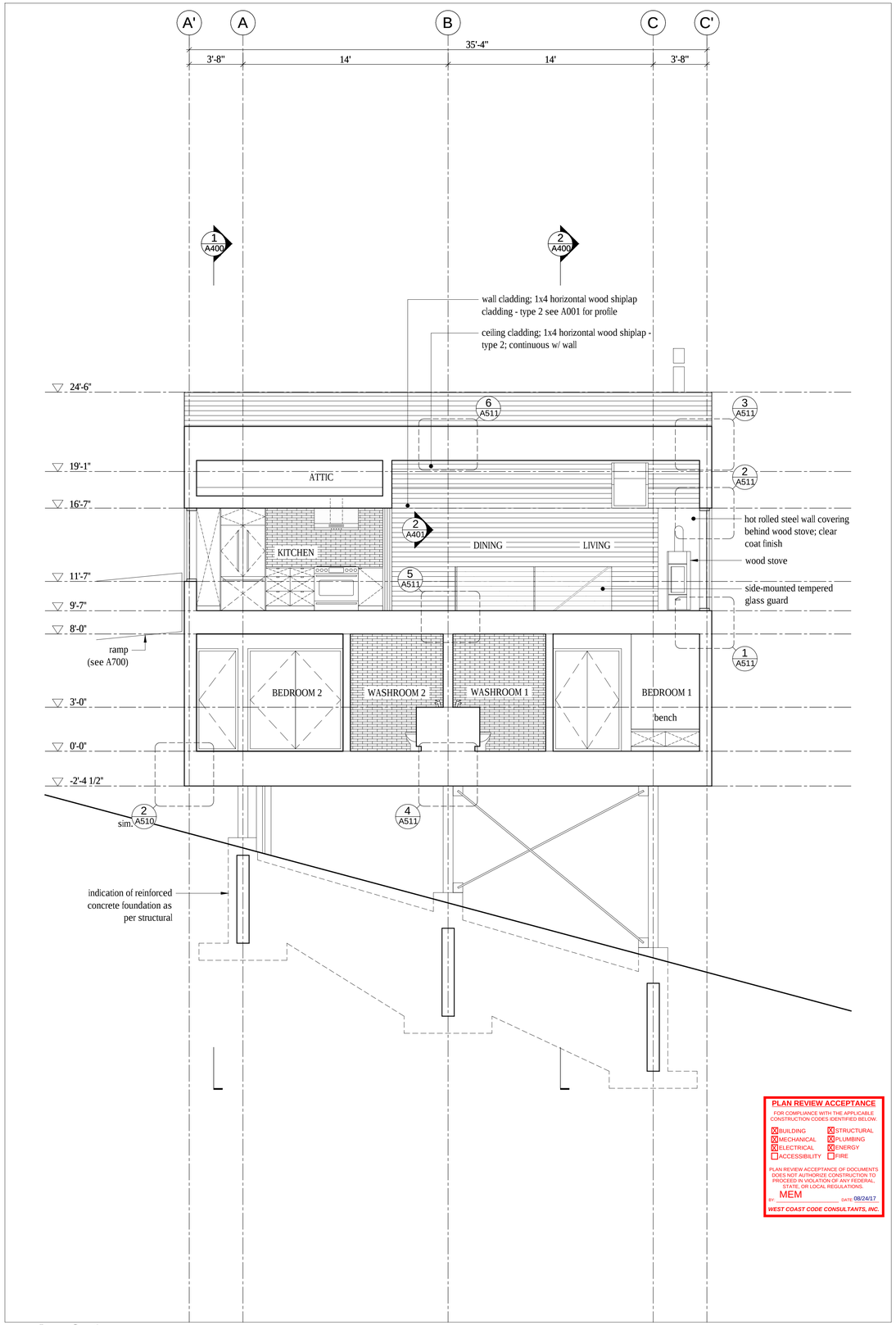

1 A401 **Long Section**
Scale 1/4" = 1'-0"

PLAN REVIEW ACCEPTANCE
FOR COMPLIANCE WITH THE APPLICABLE CONSTRUCTION CODES IDENTIFIED BELOW.

X BUILDING	X STRUCTURAL
X MECHANICAL	X PLUMBING
X ELECTRICAL	X ENERGY
☐ ACCESSIBILITY	☐ FIRE

PLAN REVIEW ACCEPTANCE OF DOCUMENTS DOES NOT AUTHORIZE CONSTRUCTION TO PROCEED IN VIOLATION OF ANY FEDERAL, STATE, OR LOCAL REGULATIONS.

BY: MEM DATE 08/24/17

WEST COAST CODE CONSULTANTS, INC.

Horizon Neighborhood
CABINS

Summit Powder Mountain
Eden, Utah

MacKay-Lyons Sweetapple Architects Limited

2188 Gottingen St.
Halifax, Nova Scotia
Canada B3K 3B4

ph: (902) 429.1867
fax: (902) 429.6276

STATE OF UTAH
Brian MacKay-Lyons
No. 9809836
LICENSED ARCHITECT

No.	Description	Date
03	Issued for Const. Rev. 1	21.07.2017
02	Issued for Construction	17.03.2017
01	Issued for FDN Permit	28.10.2016

Revision:

NOTES:

COPYRIGHT RELATED TO THE USE OF THIS DRAWING:
The use of this drawing shall be governed by standard copyright law as generally accepted in architectural practice.

ARCHITECT'S REQUIREMENTS AND APPROVALS:
It is the Builder's responsibility to notify MacKay-Lyons Sweetapple Architects Ltd. and to seek prior written approval for materials and workmanship which deviates from instructions provided by the Architect.

ENGINEER'S REQUIREMENTS AND APPROVALS:
It is the Builder's responsibility to notify MacKay-Lyons Sweetapple Architects Ltd. and to seek prior written approval for materials and workmanship which deviates from instructions provided by the Engineer.

AUTHORITIES' REQUIREMENTS AND APPROVALS:
All materials and workmanship must comply with the requirements of all authorities having jurisdication over the work. It is the Builder's responsibility to gain necessary approval from all relevant Authorities.

DIMENSIONS:
All dimensions must be verified on site. Do not scale off drawings. Plans take precedent over elevations. In the absence of dimensions, or if discrepancies exist, consult Architect. All minimum dimensions are to comply with the International Residential Code.

SHOP DRAWINGS:
Submit shop drawings to the Architect and Engineer for approval prior to manufacture of prefabricated elements of the building.

Cabin 1000

Building Section

scale: 1/4" = 1'-0"
date: 16-04-20
drawn: MJ/JL
chk'd: BML

A401

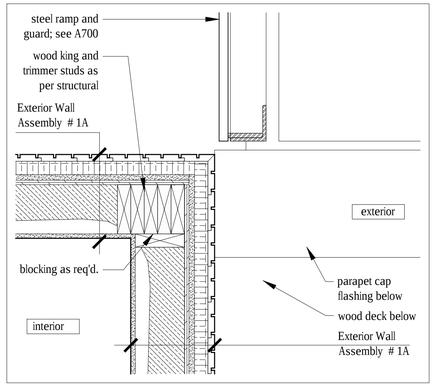

9 A500 **Plan Detail**
Scale 1 1/2" = 1'-0"

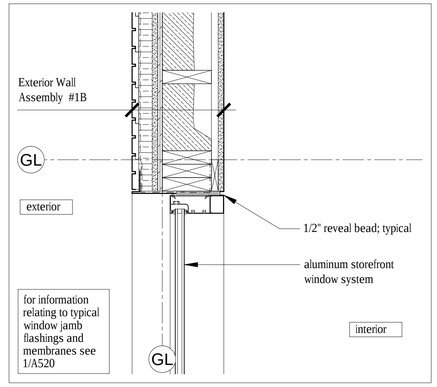

6 A500 **Plan Detail**
Scale 1 1/2" = 1'-0"

Exterior Wall Assembly 1A
+ 1x4 vertical shiplap wood cladding - type 1 - see A001 for profile
+ rainscreen grid
+ vapor permeable weather barrier
+ 1 1/2" continuous XPS rigid insulation (R7.5)
+ 5/8" type X gypsum sheathing
+ plywood sheathing as per structural
+ 2x6 wood studs as per structural
+ 4" 2lb. sprayfoam insulation (R20 - air barrier / vapor retarder Class 2)
+ 5/8" type X gypsum wallboard (5/8" type X gypsum tile backer board in wet areas)
+ refer to wall finish schedule for interior finish

Exterior Wall Assembly 1B
+ 1x4 vertical shiplap wood cladding - type 1 - see A001 for profile
+ rainscreen grid
+ vapor permeable weather barrier
+ 1 1/2" continuous XPS rigid insulation (R7.5)
+ 5/8" type X gypsum sheathing
+ plywood sheathing as per structural
+ 2x6 wood studs as per structural
+ 4" 2lb. sprayfoam insulation (R20 - air barrier / vapor retarder Class 2)
+ 1x4 wood strapping @ 16" o.c.
+ 5/8" type X gypsum wallboard (5/8" type X gypsum tile backer board in wet areas)
+ refer to wall finish schedule for interior finish

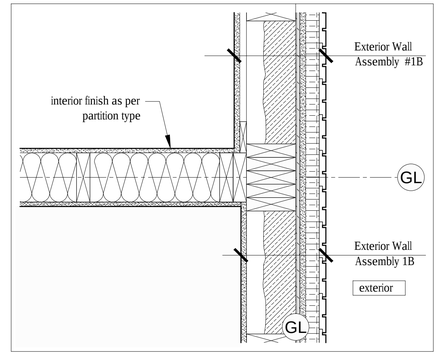

1 A500 **Plan Detail**
Scale 1 1/2" = 1'-0"

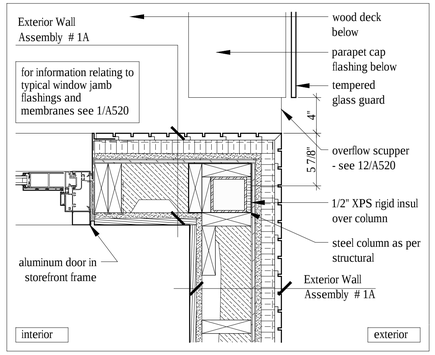

8 A500 **Plan Detail**
Scale 1 1/2" = 1'-0"

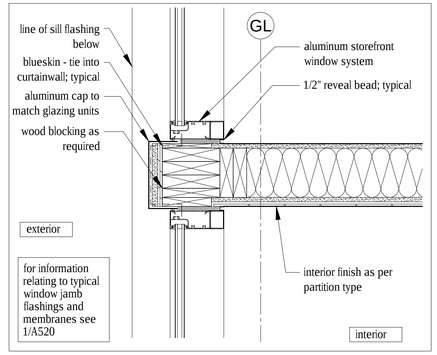

5 A500 **Plan Detail**
Scale 1 1/2" = 1'-0"

- A500 **Assemblies**
Scale 1 1/2" = 1'-0"

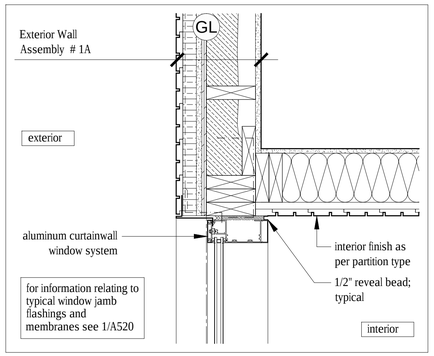

11 A500 **Plan Detail**
Scale 1 1/2" = 1'-0"

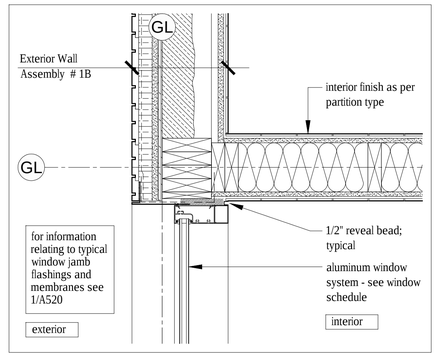

4 A500 **Plan Detail**
Scale 1 1/2" = 1'-0"

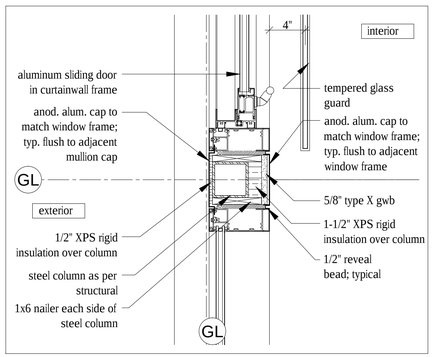

10 A500 **Plan Detail**
Scale 1 1/2" = 1'-0"

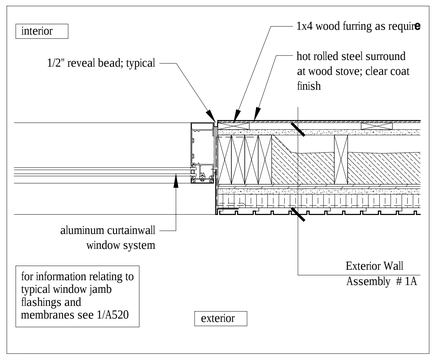

7 A500 **Plan Detail**
Scale 1 1/2" = 1'-0"

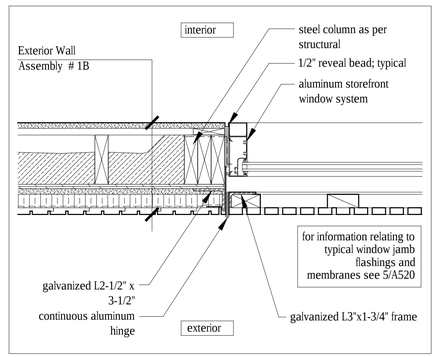

3 A500 **Plan Detail**
Scale 1 1/2" = 1'-0"

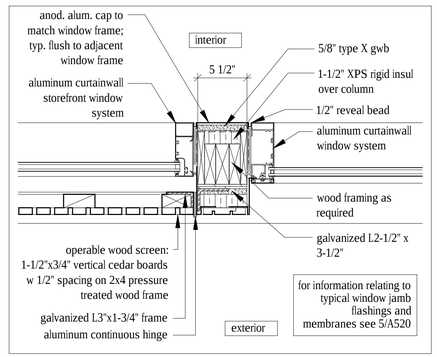

2 A500 **Plan Detail**
Scale 1 1/2" = 1'-0"

Horizon Neighborhood Cabins
Summit Powder Mountain
Eden, Utah

MacKay-Lyons Sweetappie Architects Limited
2188 Gottingen St.
Halifax, Nova Scotia
Canada B3K 3B4
ph: (902) 429.1867
fax: (902) 429.6276

STATE OF UTAH
Brian MacKay-Lyons
No. 9809836
LICENSED ARCHITECT

No.	Description	Date
03	Issued for Const. Rev. 2	15.08.2017
02	Issued for Const. Rev. 1	21.07.2017
01	Issued for Construction	17.03.2017

Revision:

NOTES:

COPYRIGHT RELATED TO THE USE OF THIS DRAWING:
The use of this drawing shall be governed by standard copyright law as generally accepted in architectural practice.

ARCHITECT'S REQUIREMENTS AND APPROVALS:
It is the Builder's responsibility to notify MacKay-Lyons Sweetappie Architects Ltd. and to seek prior written approval for materials and workmanship which deviates from instructions provided by the Architect.

ENGINEER'S REQUIREMENTS AND APPROVALS:
It is the Builder's responsibility to notify MacKay-Lyons Sweetappie Architects Ltd. and to seek prior written approval for materials and workmanship which deviates from instructions provided by the Engineer.

AUTHORITIES' REQUIREMENTS AND APPROVALS:
All materials and workmanship must comply with the requirements of all authorities having jurisdication over the work. It is the Builder's responsibility to gain necessary approval from all relevant Authorities.

DIMENSIONS:
All dimensions must be verified on site. Do not scale off drawings. Plans take precedent over elevations. In the absence of dimensions, or if discrepancies exist, consult Architect. All minimum dimensions are to comply with the International Residential Code.

SHOP DRAWINGS:
Submit shop drawings to the Architect and Engineer for approval prior to manufacture of prefabricated elements of the building.

PLAN REVIEW ACCEPTANCE
FOR COMPLIANCE WITH THE APPLICABLE CONSTRUCTION CODES IDENTIFIED BELOW:

☒ BUILDING	☒ STRUCTURAL
☒ MECHANICAL	☒ PLUMBING
☒ ELECTRICAL	☒ ENERGY
☐ ACCESSIBILITY	☐ FIRE

PLAN REVIEW ACCEPTANCE OF DOCUMENTS DOES NOT AUTHORIZE CONSTRUCTION TO PROCEED IN VIOLATION OF ANY FEDERAL, STATE, OR LOCAL REGULATIONS.

BY MEM DATE 08/24/17

WEST COAST CODE CONSULTANTS, INC.

Cabin 1000

Plan Details

scale: 1 1/2" = 1'-0"
date: 16-05-02
drawn: MJ/DP
chk'd: BML

A500

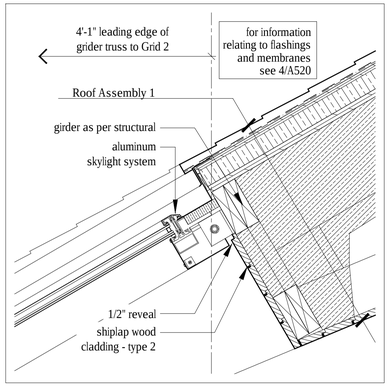

8 A510 Head Detail at Skylight Window
Scale 1 1/2" = 1'-0"

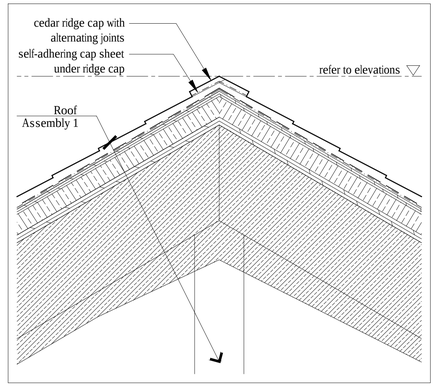

7 A510 Typical Section Detail @ Ridge
Scale 1 1/2" = 1'-0"

Roof Assembly 1
+ 'Class B' fire retardant pressure treated cedar shingles
+ rainscreen grid
+ 'Class A' mineral-surfaced cap sheet
+ self-adhering sheet roof membrane underlayment
+ 1/2" exterior grade plywood
+ 2" continuous XPS rigid insulation (R10)
+ plywood sheathing as per structural
+ wood trusses as per structural
+ 6" 2lb. closed cell sprayfoam insulation (R30 - air barrier / vapor retarder Class 2)
+ interior sprinkler system as per A101 code review
+ 3/4" shiplap wood cladding - type 2 - see A001 for profile

Roof Assembly 2
+ 'Class B' fire retardant pressure treated cedar shingles
+ rainscreen grid
+ 'Class A' mineral-surfaced cap sheet
+ self-adhering sheet roof membrane underlayment
+ 1/2" exterior grade plywood
+ 2" continuous XPS rigid insulation (R10)
+ plywood sheathing as per structural
+ wood trusses as per structural
+ 5/8" type X gypsum sheathing
+ vapor permeable weather barrier
+ 3/4" shiplap wood cladding - type 2 - see A001 for profile

Floor Assembly 1
+ 3" concrete topping w/ in-floor heating
+ plywood sheathing as per structural
+ wood floor joists as per structural
+ wood furring as required
+ interior sprinkler system as per A101 code review
+ 3/4" shiplap wood cladding - type 2 - see A001 for profile

Floor Assembly 2
+ 3" concrete topping w/ in-floor heating
+ plywood sheathing as per structural
+ wood furring as per structural
+ wood floor joists as per structural
+ interior sprinkler system as per A101 code review
+ 3/4" shiplap wood cladding - type 2 - see A001 for profile

Floor Assembly 3
+ palletized wood deck system
+ liquid-applied roofing membrane
+ plywood sheathing as per structural - slope to drain, minimum 2%
+ wood floor joists as per structural; tapered to create slope
+ 6" 2lb. sprayfoam insulation (R30 - air barrier / vapor retarder Class 2)
+ interior sprinkler system as per A101 code review
+ 3/4" shiplap wood cladding - type 2 - see A001 for profile

Floor Assembly 4
+ 3" concrete topping w/ in-floor heating
+ plywood sheathing as per structural
+ wood floor joists as per structural
+ 1/2" plywood
+ steel beam as per structural
+ 6" 2lb. sprayfoam insulation (R30 - air barrier / vapor retarder Class 2)
+ 2x4 nailer as required
+ 5/8" type X gypsum sheathing
+ vapour permeable weather barrier
+ rainscreen grid
+ 1x4 wood shiplap cladding - type 1 - see A001 for profile

Exterior Wall Assembly 1A
+ 1x4 vertical shiplap wood cladding - type 1 - see A001 for profile
+ rainscreen grid
+ vapor permeable weather barrier
+ 1 1/2" continuous XPS rigid insulation (R7.5)
+ 5/8" type X gypsum sheathing
+ plywood sheathing as per structural
+ 2x6 wood studs as per structural
+ 4" 2lb. sprayfoam insulation (R20 - air barrier / vapor retarder Class 2)
+ 5/8" type X gypsum wallboard (5/8" type X gypsum tile backer board in wet areas)
+ refer to wall finish schedule for interior finish

Exterior Wall Assembly 1B
+ 1x4 vertical shiplap wood cladding - type 1 - see A001 for profile
+ rainscreen grid
+ vapor permeable weather barrier
+ 1 1/2" continuous XPS rigid insulation (R7.5)
+ 5/8" type X gypsum sheathing
+ plywood sheathing as per structural
+ 2x6 wood studs as per structural
+ 4" 2lb. sprayfoam insulation (R20 - air barrier / vapor retarder Class 2)
+ 1x4 wood strapping @ 16" o.c.
+ 5/8" type X gypsum wallboard (5/8" type X gypsum tile backer board in wet areas)
+ refer to wall finish schedule for interior finish

Exterior Wall Assembly 1C
+ 1x4 horizontal shiplap wood cladding - type 1 - see A001 for profile
+ rainscreen grid
+ vapor permeable weather barrier
+ 1 1/2" continuous XPS rigid insulation (R7.5)
+ 5/8" type X gypsum sheathing
+ plywood sheathing as per structural
+ 2x6 wood studs as per structural
+ 4" 2lb. sprayfoam insulation (R20 - air barrier / vapor retarder Class 2)
+ 5/8" type X gypsum wallboard
+ 1x4 horizontal shiplap wood cladding - type 2 - see A001 for profile

Exterior Wall Assembly 2
+ 1x4 vertical shiplap wood cladding - type 1 - see A001 for profile
+ rainscreen grid
+ vapor permeable weather barrier
+ 1 1/2" continuous XPS rigid insulation (R7.5)
+ 5/8" type X gypsum sheathing
+ plywood sheathing as per structural
+ 2x6 wood studs as per structural
+ 5/8" type X gypsum sheathing
+ vapor permeable weather barrier
+ 1x4 vertical wood shiplap cladding - type 1 - see A001 for profile

Exterior Wall Assembly 3
+ 1x4 vertical shiplap wood cladding - type 1 - see A001 for profile
+ rainscreen grid
+ vapor permeable weather barrier
+ 1 1/2" continuous XPS rigid insulation (R7.5)
+ 5/8" type X gypsum sheathing
+ plywood sheathing as per structural
+ 2x6 wood studs as per structural
+ 5/8" type X gypsum sheathing
+ vapor permeable weather barrier
+ 1x4 horizontal shiplap cladding - type 1 - see A001 for profile

Soffit Assembly 1
+ 3/4" sheathing
+ 6" 2lb. sprayfoam insulation (R30 - air barrier / vapor retarder Class 2)
+ wood roof joists as per structural
+ 5/8" type X gypsum sheathing
+ vapor permeable weather barrier
+ 1x4 wood shiplap cladding - type 1 - see A001 for profile

- A510 Assemblies
Scale 1 1/2" = 1'-0"

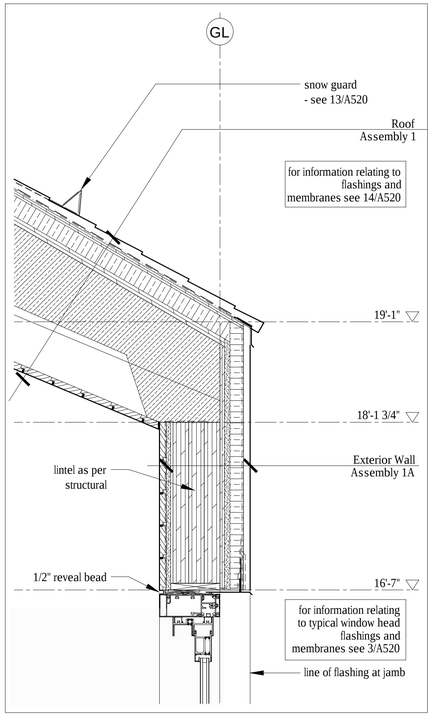

6 A510 Typical Eave and Window Head Detail
Scale 1 1/2" = 1'-0"

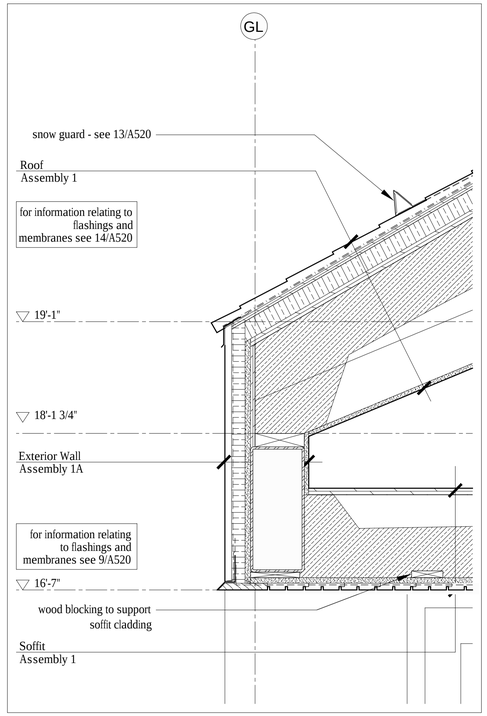

4 A510 Section Detail @ Entry Porch Soffit
Scale 1 1/2" = 1'-0"

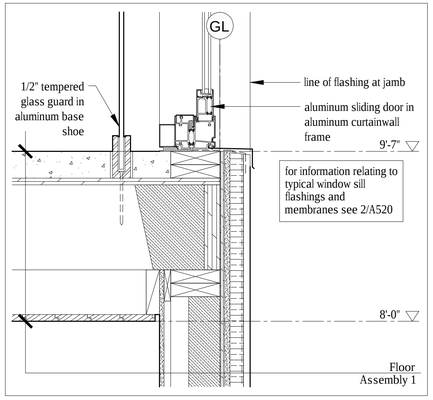

5 A510 Typical Window Sill Detail
Scale 1 1/2" = 1'-0"

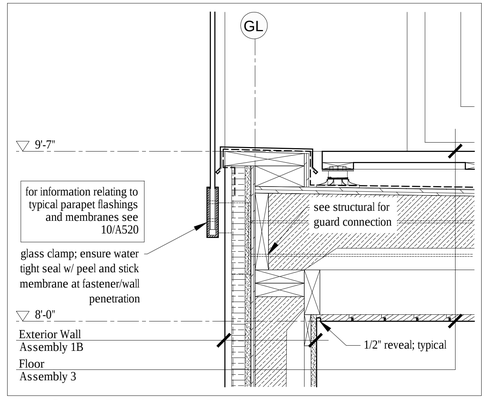

3 A510 Section Detail at Entry Porch Parapet
Scale 1 1/2" = 1'-0"

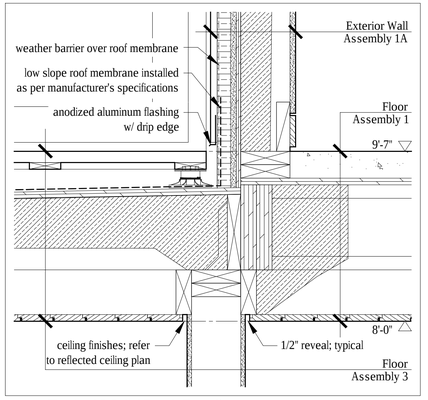

1 A510 Typical Wall / Deck Detail
Scale 1 1/2" = 1'-0"

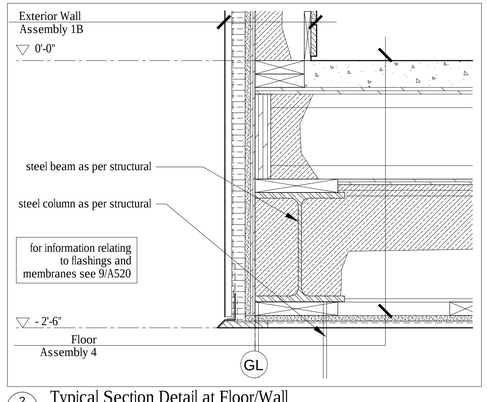

2 A510 Typical Section Detail at Floor/Wall
Scale 1 1/2" = 1'-0"

PLAN REVIEW ACCEPTANCE
FOR COMPLIANCE WITH THE APPLICABLE CONSTRUCTION CODES IDENTIFIED BELOW:

☒ BUILDING	☒ STRUCTURAL
☒ MECHANICAL	☒ PLUMBING
☒ ELECTRICAL	☒ ENERGY
☐ ACCESSIBILITY	☐ FIRE

PLAN REVIEW ACCEPTANCE OF DOCUMENTS DOES NOT AUTHORIZE CONSTRUCTION TO PROCEED IN VIOLATION OF ANY FEDERAL, STATE, OR LOCAL REGULATIONS.

MEM
BY _____ DATE: 08/24/17
WEST COAST CODE CONSULTANTS, INC.

Summit Neighborhood Cabins
Summit Powder Mountain
Eden, Utah

MacKay-Lyons Sweetapple Architects Limited
2188 Gottingen St.
Halifax, Nova Scotia
Canada B3K 3B4
ph: (902) 429.1867
fax: (902) 429.6276

STATE OF UTAH
Brian MacKay-Lyons
No. 9809836
LICENSED ARCHITECT

No.	Description	Date
03	Issued for Const. Rev. 2	15.08.2017
02	Issued for Const. Rev. 1	21.07.2017
01	Issued for Construction	17.03.2017

Revision:

NOTES:

COPYRIGHT RELATED TO THE USE OF THIS DRAWING:
The use of this drawing shall be governed by standard copyright law as generally accepted in architectural practice.

ARCHITECT'S REQUIREMENTS AND APPROVALS:
It is the Builder's responsibility to notify MacKay-Lyons Sweetapple Architects Ltd. and to seek prior written approval for materials and workmanship which deviates from instructions provided by the Architect.

ENGINEER'S REQUIREMENTS AND APPROVALS:
It is the Builder's responsibility to notify MacKay-Lyons Sweetapple Architects Ltd. and to seek prior written approval for materials and workmanship which deviates from instructions provided by the Engineer.

AUTHORITIES' REQUIREMENTS AND APPROVALS:
All materials and workmanship must comply with the requirements of all authorities having jurisdication over the work. It is the Builder's responsibility to gain necessary approval from all relevant Authorities.

DIMENSIONS:
All dimensions must be verified on site. Do not scale off drawings. Plans take precedent over elevations. In the absence of dimensions, or if discrepancies exist, consult Architect. All minimum dimensions are to comply with the International Residential Code.

SHOP DRAWINGS:
Submit shop drawings to the Architect and Engineer for approval prior to manufacture of prefabricated elements of the building.

Cabin 1000

Section Details

scale: 1 1/2" = 1'-0"
date: 16-05-02
drawn: DP
chk'd: BML

A510

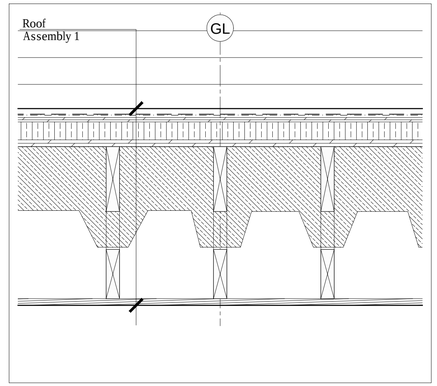

6 A511 Typical Section Detail @ Ceiling and Steel Truss
Scale 1 1/2" = 1'-0"

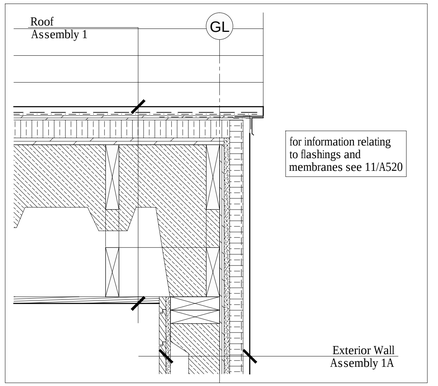

3 A511 Typical Rake Detail
Scale 1 1/2" = 1'-0"

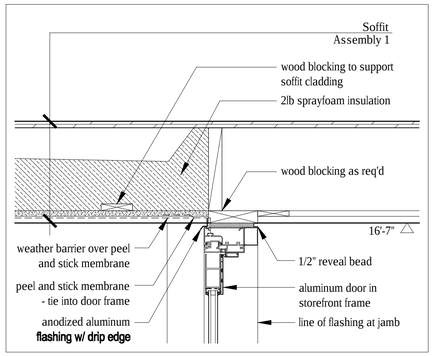

8 A511 Section Detail @ Entry Door Head
Scale 1 1/2" = 1'-0"

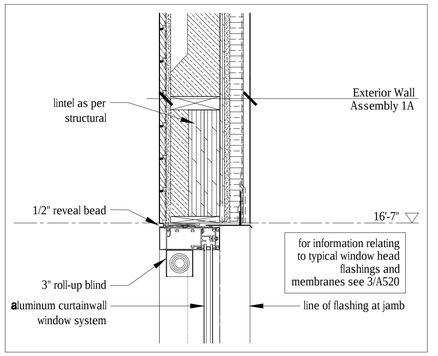

2 A511 Section Detail
Scale 1 1/2" = 1'-0"

Roof Assembly 1
+ 'Class B' fire retardant pressure treated cedar shingles
+ rainscreen grid
+ 'Class A' mineral-surfaced cap sheet
+ self-adhering sheet roof membrane underlayment
+ 1/2" exterior grade plywood
+ 2" continuous XPS rigid insulation (R10)
+ plywood sheathing as per structural
+ wood trusses as per structural
+ 6" 2lb. closed cell sprayfoam insulation (R30 - air barrier / vapor retarder Class 2)
+ interior sprinkler system as per A101 code review
+ 3/4" shiplap wood cladding - type 2 - see A001 for profile

Floor Assembly 1
+ 3" concrete topping w/ in-floor heating
+ plywood sheathing as per structural
+ wood floor joists as per structural
+ wood furring as required
+ interior sprinkler system as per A101 code review
+ 3/4" shiplap wood cladding - type 2 - see A001 for profile

Floor Assembly 2
+ 3" concrete topping w/ in-floor heating
+ plywood sheathing as per structural
+ wood furring as per structural
+ wood floor joists as per structural
+ interior sprinkler system as per A101 code review
+ 3/4" shiplap wood cladding - type 2 - see A001 for profile

Floor Assembly 3
+ palletized wood deck system
+ liquid-applied roofing membrane
+ plywood sheathing as per structural - slope to drain, minimum 2%
+ wood floor joists as per structural; tapered to create slope
+ 6" 2lb. sprayfoam insulation (R30 - air barrier / vapor retarder Class 2)
+ interior sprinkler system as per A101 code review
+ 3/4" shiplap wood cladding - type 2 - see A001 for profile

Floor Assembly 4
+ 3" concrete topping w/ in-floor heating
+ plywood sheathing as per structural
+ wood floor joists as per structural
+ 1/2" plywood
+ steel beam as per structural
+ 6" 2lb. sprayfoam insulation (R30 - air barrier / vapor retarder Class 2)
+ 2x4 nailer as required
+ 5/8" type X gypsum sheathing
+ vapour permeable weather barrier
+ rainscreen grid
+ 1x4 wood shiplap cladding - type 1 - see A001 for profile

Exterior Wall Assembly 1A
+ 1x4 vertical shiplap wood cladding - type 1 - see A001 for profile
+ rainscreen grid
+ vapor permeable weather barrier
+ 1 1/2" continuous XPS rigid insulation (R7.5)
+ 5/8" type X gypsum sheathing
+ plywood sheathing as per structural
+ 2x6 wood studs as per structural
+ 4" 2lb. sprayfoam insulation (R20 - air barrier / vapor retarder Class 2)
+ 5/8" type X gypsum wallboard (5/8" type X gypsum tile backer board in wet areas)
+ refer to wall finish schedule for interior finish

Exterior Wall Assembly 1B
+ 1x4 vertical shiplap wood cladding - type 1 - see A001 for profile
+ rainscreen grid
+ vapor permeable weather barrier
+ 1 1/2" continuous XPS rigid insulation (R7.5)
+ 5/8" type X gypsum sheathing
+ plywood sheathing as per structural
+ 2x6 wood studs as per structural
+ 4" 2lb. sprayfoam insulation (R20 - air barrier / vapor retarder Class 2)
+ 1x4 wood strapping @ 16" o.c.
+ 5/8" type X gypsum wallboard (5/8" type X gypsum tile backer board in wet areas)
+ refer to wall finish schedule for interior finish

- A511 Assemblies

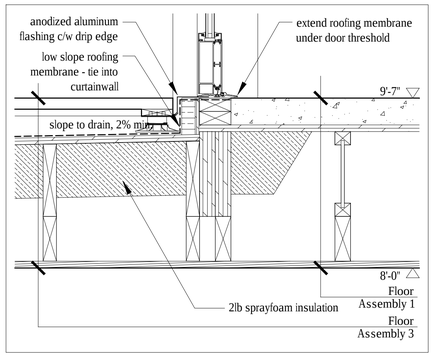

7 A511 Section Detail @ Entry Door Threshold
Scale 1 1/2" = 1'-0"

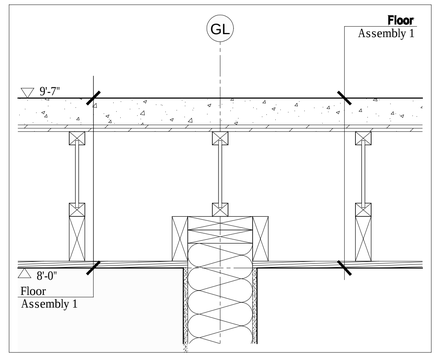

5 A511 Section Detail @ Interior Wall
Scale 1 1/2" = 1'-0"

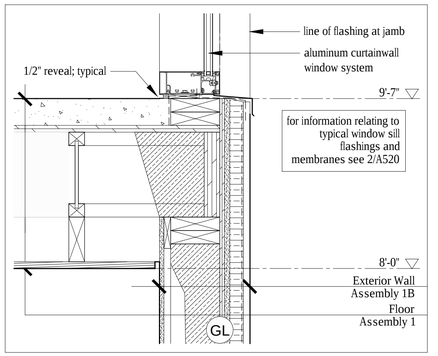

1 A511 Section Detail
Scale 1 1/2" = 1'-0"

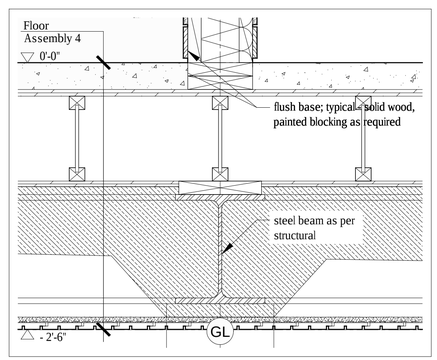

4 A511 Section Detail @ Lower Floor
Scale 1 1/2" = 1'-0"

Horizon Neighborhood
Cabins

Summit Powder Mountain
Eden, Utah

MacKay-Lyons Sweetapple
Architects Limited

2188 Göttingen St.
Halifax, Nova Scotia
Canada B3K 3B4

ph: (902) 429.1867
fax: (902) 429.6276

STATE OF UTAH
Brian MacKay-Lyons
No. 9809836
LICENSED ARCHITECT

No.	Description	Date
03	Issued for Const. Rev. 2	15.08.2017
02	Issued for Const. Rev. 1	21.07.2017
01	Issued for Construction	17.03.2017

Revision:

NOTES:

COPYRIGHT RELATED TO THE USE OF THIS DRAWING:
The use of this drawing shall be governed by standard copyright law as generally accepted in architectural practice.

ARCHITECT'S REQUIREMENTS AND APPROVALS:
It is the Builder's responsibility to notify MacKay-Lyons Sweetapple Architects Ltd. and to seek prior written approval for materials and workmanship which deviates from instructions provided by the Architect.

ENGINEER'S REQUIREMENTS AND APPROVALS:
It is the Builder's responsibility to notify MacKay-Lyons Sweetapple Architects Ltd. and to seek prior written approval for materials and workmanship which deviates from instructions provided by the Engineer.

AUTHORITIES' REQUIREMENTS AND APPROVALS:
All materials and workmanship must comply with the requirements of all authorities having jurisdication over the work. It is the Builder's responsibility to gain necessary approval from all relevant Authorities.

DIMENSIONS:
All dimensions must be verified on site. Do not scale off drawings. Plans take precedent over elevations. In the absence of dimensions, or if discrepancies exist, consult Architect. All minimum dimensions are to comply with the International Residential Code.

SHOP DRAWINGS:
Submit shop drawings to the Architect and Engineer for approval prior to manufacture of prefabricated elements of the building.

PLAN REVIEW ACCEPTANCE
FOR COMPLIANCE WITH THE APPLICABLE CONSTRUCTION CODES IDENTIFIED BELOW.
☒ BUILDING ☒ STRUCTURAL
☒ MECHANICAL ☒ PLUMBING
☒ ELECTRICAL ☒ ENERGY
☐ ACCESSIBILITY ☐ FIRE
PLAN REVIEW ACCEPTANCE OF DOCUMENTS DOES NOT AUTHORIZE CONSTRUCTION TO PROCEED IN VIOLATION OF ANY FEDERAL, STATE, OR LOCAL REGULATIONS.
BY MEM DATE 08/24/17
WEST COAST CODE CONSULTANTS, INC.

Cabin 1000

Section Details

scale: 1/4" = 1'-0"
date: 16-05-02
drawn: DP
chk'd: BML

A511

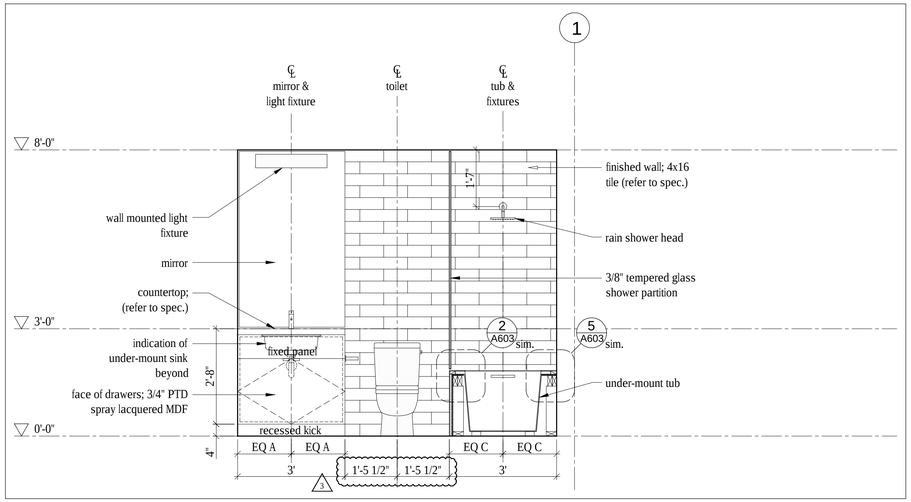

5 A600 **Bathroom - Elevation**
Scale 1/2" = 1'-0"

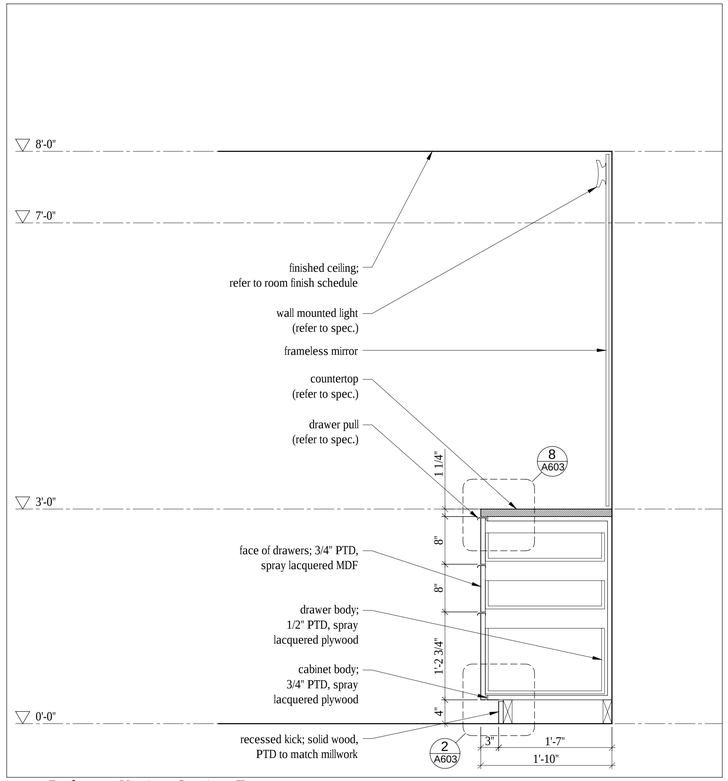

2 A600 **Bathroom Vanity - Section, Typ.**
Scale 1" = 1'-0"

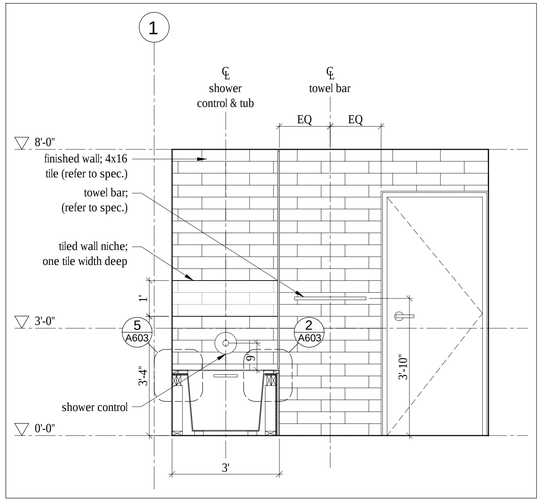

7 A600 **Bathroom - Elevation**
Scale 1/2" = 1'-0"

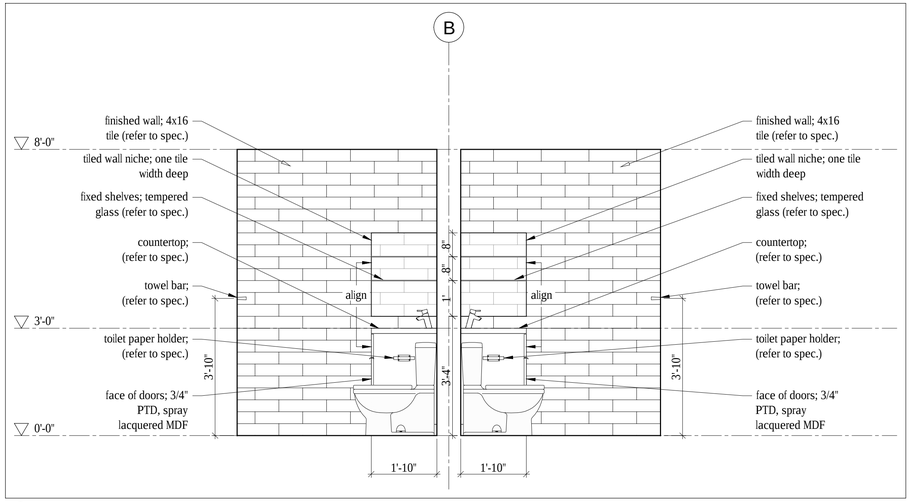

4 A600 **Bathroom - Section**
Scale 1/2" = 1'-0"

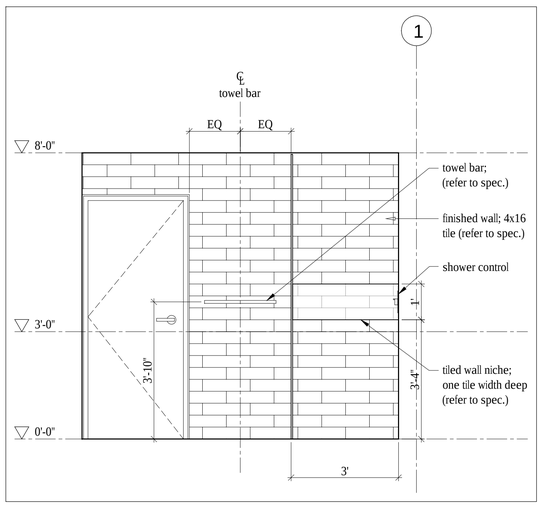

6 A600 **Bathroom - Elevation**
Scale 1/2" = 1'-0"

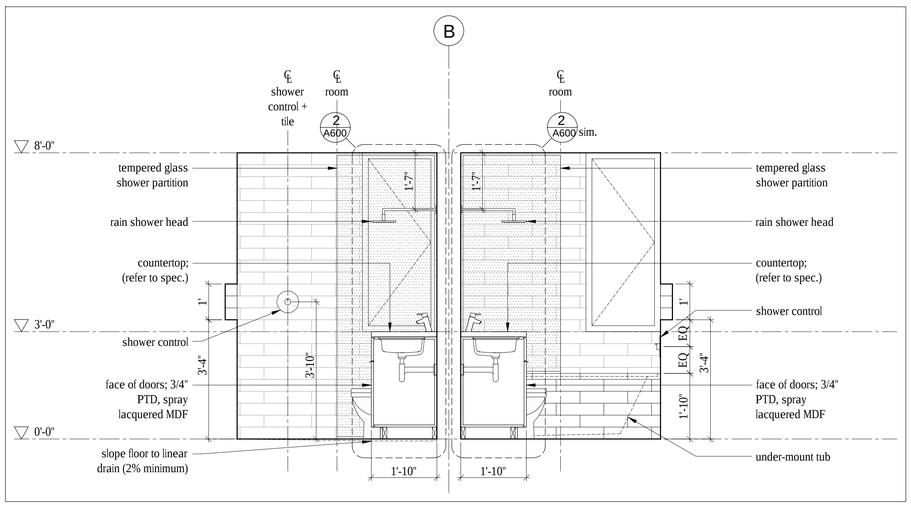

3 A600 **Bathroom - Section**
Scale 1/2" = 1'-0"

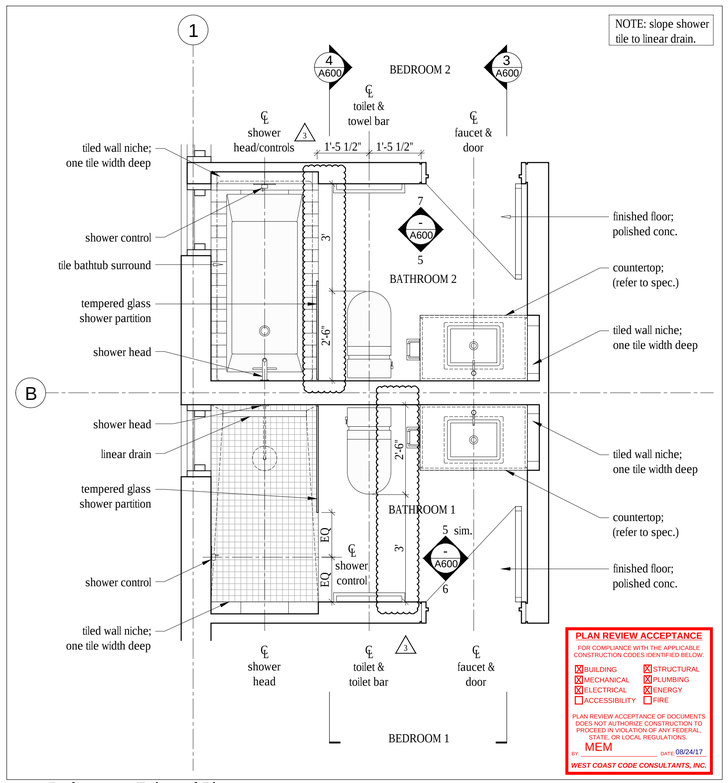

1 A600 **Bathrooms - Enlarged Plan**
Scale 1/2" = 1'-0"

Summit Horizon Neighborhood

Salt Lake City Utah

MacKay-Lyons Sweetapple Architects Limited
2188 Gottingen St.
Halifax, Nova Scotia
Canada B3K 3B4
ph: (902) 429.1867
fax: (902) 429.6276

STATE OF UTAH
Brian MacKay-Lyons
No. 9809836
LICENSED ARCHITECT

NOTE: all dimensions to be verified in field

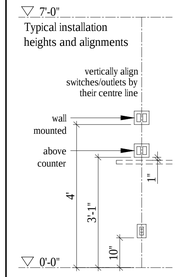

03	Issued for Const. Rev. 2	15.08.2017
02	Issued for Const. Rev. 1	21.07.2017
01	Issued for Construction	17.03.2017
No.	Description	Date
Revision:		

NOTES:

COPYRIGHT RELATED TO THE USE OF THIS DRAWING:
The use of this drawing shall be governed by standard copyright law as generally accepted in architectural practice.

ARCHITECT'S REQUIREMENTS AND APPROVALS:
It is the Builder's responsibility to notify MacKay-Lyons Sweetapple Architects Ltd. and to seek prior written approval for materials and workmanship which deviates from instructions provided by the Architect.

ENGINEER'S REQUIREMENTS AND APPROVALS:
It is the Builder's responsibility to notify MacKay-Lyons Sweetapple Architects Ltd. and to seek prior written approval for materials and workmanship which deviates from instructions provided by the Engineer.

AUTHORITIES' REQUIREMENTS AND APPROVALS:
All materials and workmanship must comply with the requirements of all authorities having jurisdiction over the work. It is the Builder's responsibility to gain necessary approval from all relevant Authorities.

DIMENSIONS:
All dimensions must be verified on site. Do not scale off drawings. Plans take precedent over elevations. In the absence of dimensions, or if discrepancies exist, consult Architect. All minimum dimensions are to comply with the International Residential Code.

SHOP DRAWINGS:
Submit shop drawings to the Architect and Engineer for approval prior to manufacture of prefabricated elements of the building.

Cabin 1000
Millwork

scale: as noted
date: 16-05-20
drawn: MJ/JL
chk'd: BML

A600

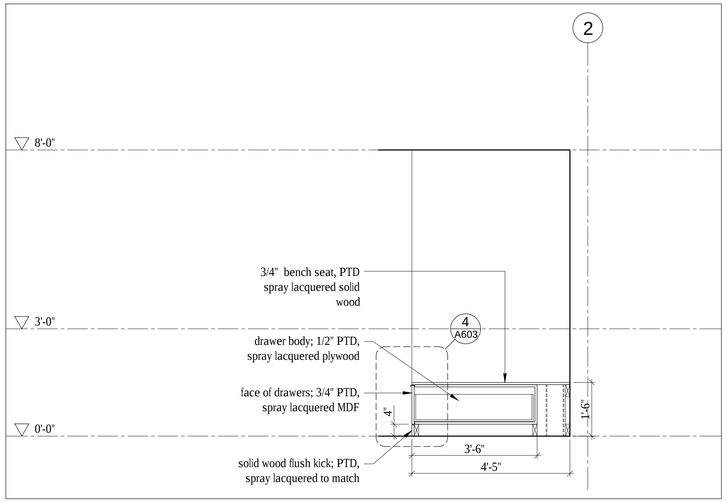

7 A601 **Bench - Section**
Scale 1/2" = 1'-0"

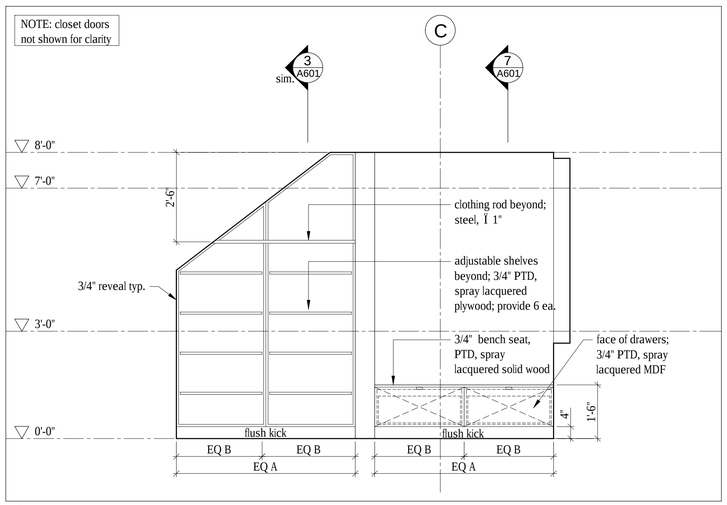

6 A601 **Closet - Elevation**
Scale 1/2" = 1'-0"

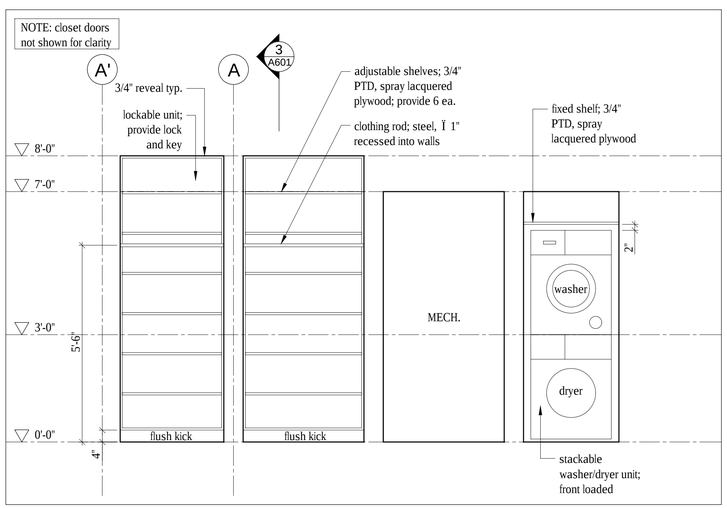

5 A601 **Closet - Elevation**
Scale 1/2" = 1'-0"

4 A601 **Not in use**

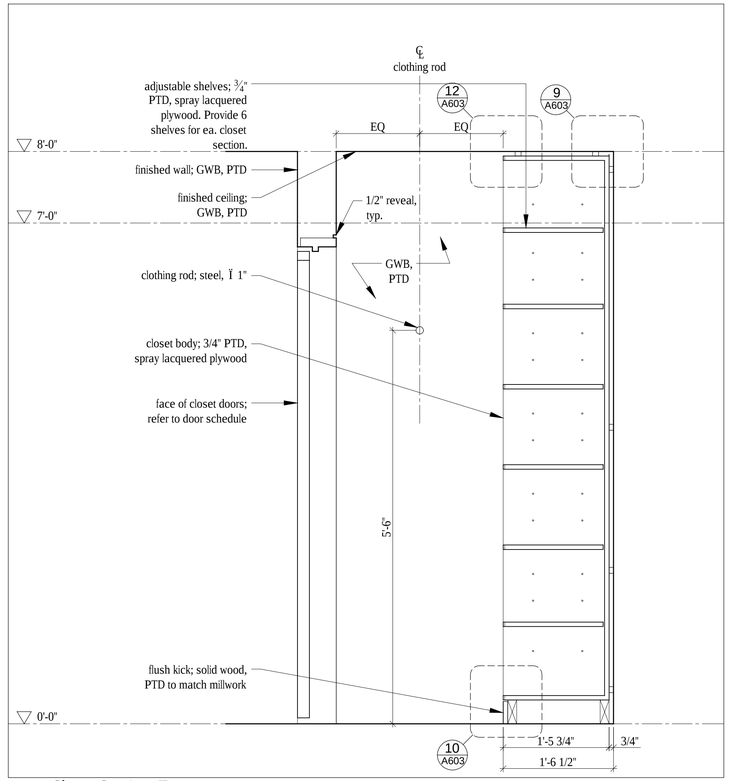

3 A601 **Closet Section, Typ.**
Scale 1" = 1'-0"

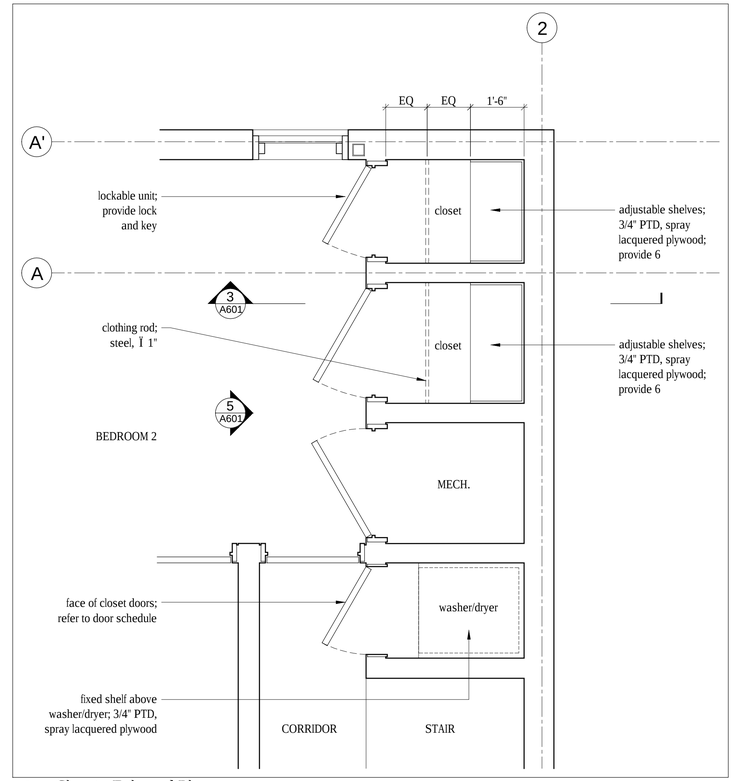

2 A601 **Closet - Enlarged Plan**
Scale 1/2" = 1'-0"

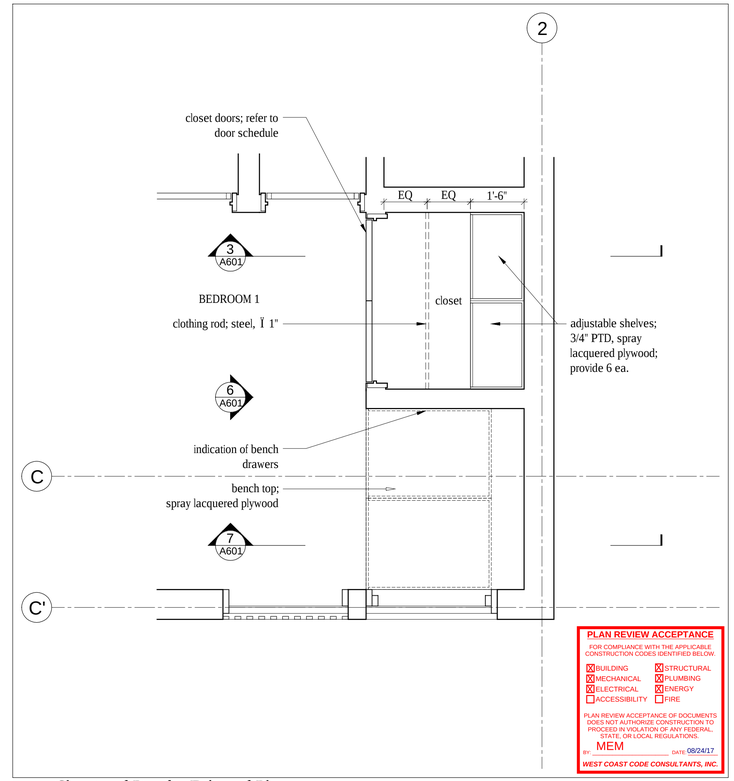

PLAN REVIEW ACCEPTANCE
FOR COMPLIANCE WITH THE APPLICABLE CONSTRUCTION CODES IDENTIFIED BELOW.

☒ BUILDING	☒ STRUCTURAL
☒ MECHANICAL	☒ PLUMBING
☒ ELECTRICAL	☒ ENERGY
☐ ACCESSIBILITY	☐ FIRE

PLAN REVIEW ACCEPTANCE OF DOCUMENTS DOES NOT AUTHORIZE CONSTRUCTION TO PROCEED IN VIOLATION OF ANY FEDERAL, STATE, OR LOCAL REGULATIONS.
BY: MEM DATE: 08/24/17
WEST COAST CODE CONSULTANTS, INC.

Summit Horizon Neighborhood

Salt Lake City Utah

MacKay-Lyons Sweetapple Architects Limited
2188 Gottingen St.
Halifax, Nova Scotia
Canada B3K 3B4
ph: (902) 429.1867
fax: (902) 429.6276

STATE OF UTAH
Brian MacKay-Lyons
No. 9809836
LICENSED ARCHITECT

NOTE: all dimensions to be verified in field

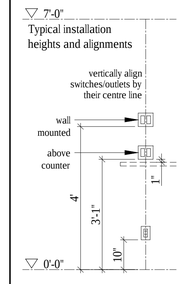

No.	Description	Date
02	Issued for Const. Rev. 1	21.07.2017
01	Issued for Construction	17.03.2017

Revision:

NOTES:

COPYRIGHT RELATED TO THE USE OF THIS DRAWING:
The use of this drawing shall be governed by standard copyright law as generally accepted in architectural practice.

ARCHITECT'S REQUIREMENTS AND APPROVALS:
It is the Builder's responsibility to notify MacKay-Lyons Sweetapple Architects Ltd. and to seek prior written approval for materials and workmanship which deviates from instructions provided by the Architect.

ENGINEER'S REQUIREMENTS AND APPROVALS:
It is the Builder's responsibility to notify MacKay-Lyons Sweetapple Architects Ltd. and to seek prior written approval for materials and workmanship which deviates from instructions provided by the Engineer.

AUTHORITIES' REQUIREMENTS AND APPROVALS:
All materials and workmanship must comply with the requirements of all authorities having jurisdication over the work. It is the Builder's responsibility to gain necessary approval from all relevant Authorities.

DIMENSIONS:
All dimensions must be verified on site. Do not scale off drawings. Plans take precedent over elevations. In the absence of dimensions, or if discrepancies exist, consult Architect. All minimum dimensions are to comply with the International Residential Code.

SHOP DRAWINGS:
Submit shop drawings to the Architect and Engineer for approval prior to manufacture of prefabricated elements of the building.

Cabin 1000

Millwork

scale: as noted
date: 16-05-20
drawn: MJ/JL
chk'd: BML

A601

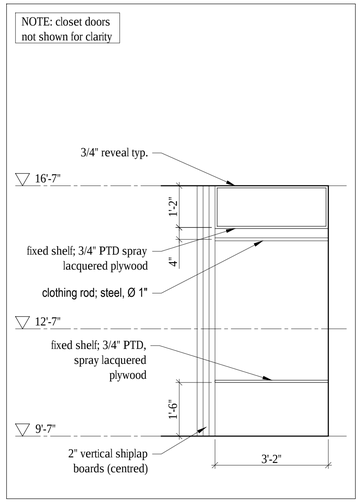

8 A602 Mudroom Closet - Elevation
Scale 1/2" = 1'-0"

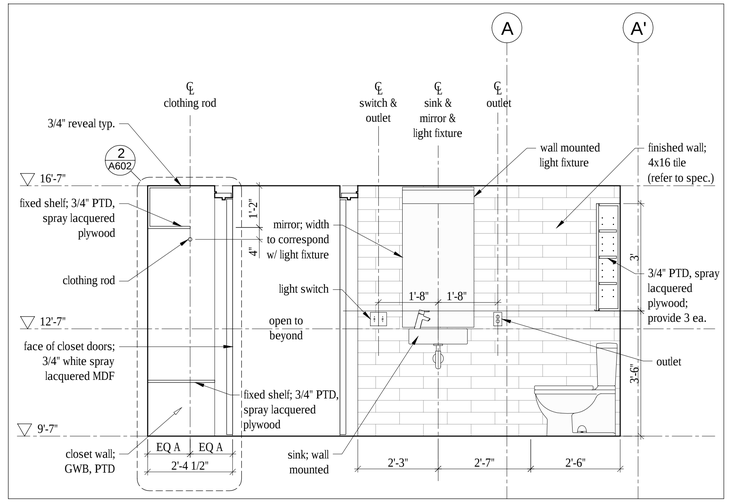

5 A602 Mud Rm & Powder Rm - Section
Scale 1/2" = 1'-0"

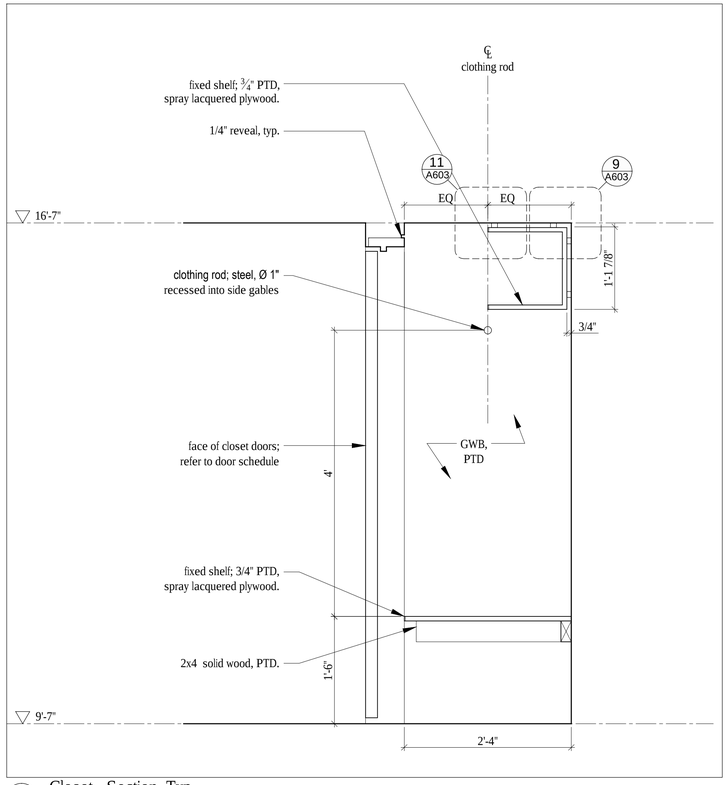

2 A602 Closet - Section, Typ.
Scale 1" = 1'-0"

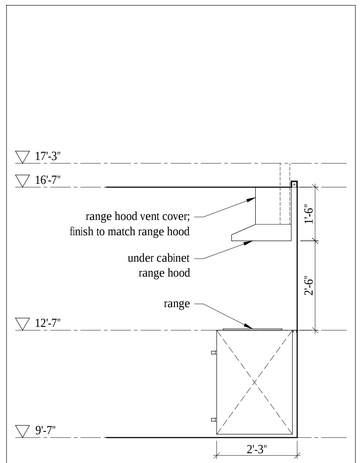

7 A602 Kitchen - Section
Scale 1/2" = 1'-0"

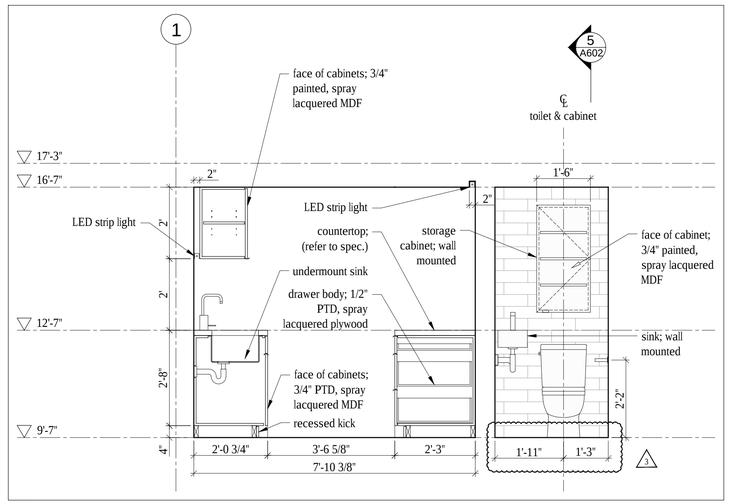

4 A602 Kitchen & Powder Room - Section
Scale 1/2" = 1'-0"

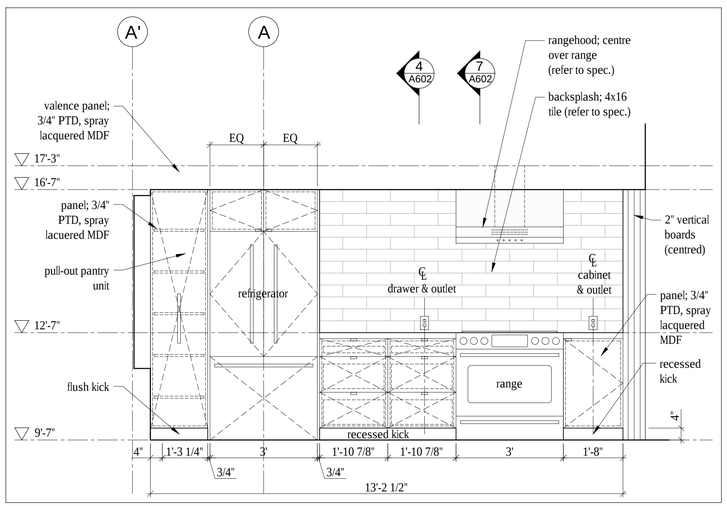

6 A602 Kitchen - Elevation
Scale 1/2" = 1'-0"

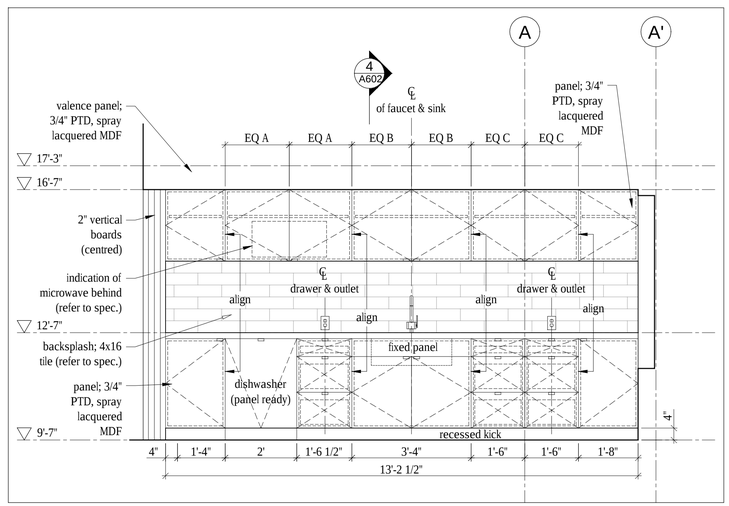

3 A602 Kitchen - Elevation
Scale 1/2" = 1'-0"

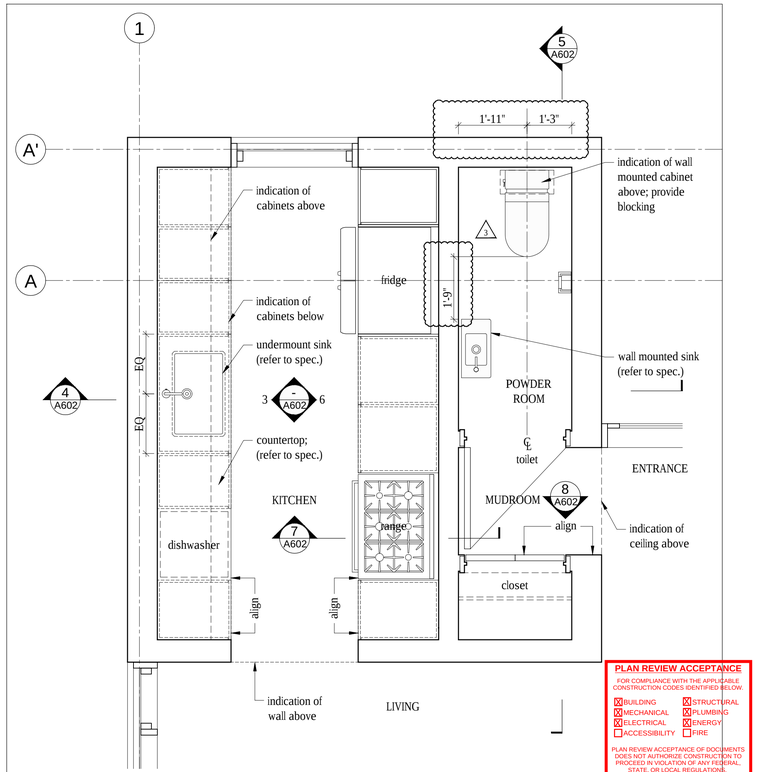

1 A602 Kitchen/Powder Room/Mudroom - Enlarged Plan
Scale 1/2" = 1'-0"

PLAN REVIEW ACCEPTANCE
FOR COMPLIANCE WITH THE APPLICABLE CONSTRUCTION CODES IDENTIFIED BELOW.
☒ BUILDING ☒ STRUCTURAL
☒ MECHANICAL ☒ PLUMBING
☒ ELECTRICAL ☒ ENERGY
☐ ACCESSIBILITY ☐ FIRE
PLAN REVIEW ACCEPTANCE OF DOCUMENTS DOES NOT AUTHORIZE CONSTRUCTION TO PROCEED IN VIOLATION OF ANY FEDERAL, STATE, OR LOCAL REGULATIONS.
BY MEM DATE 08/24/17
WEST COAST CODE CONSULTANTS, INC.

Summit Horizon
Neighborhood
Salt Lake City
Utah

MacKay-Lyons
Sweetapple
Architects
Limited
2188 Gottingen St.
Halifax, Nova Scotia
Canada B3K 3B4
ph: (902) 429.1867
fax: (902) 429.6276

STATE OF UTAH
Brian MacKay-Lyons
No. 9809836
LICENSED ARCHITECT

NOTE: all dimensions
to be verified in field

7'-0"
Typical installation
heights and alignments
vertically align
switches/outlets by
their centre line
wall
mounted
above
counter
1"
4"
3'-1"
10"
0'-0"

No.	Description	Date
03	Issued for Const. Rev. 2	15.08.2017
02	Issued for Const. Rev. 1	21.07.2017
01	Issued for Construction	17.03.2017

Revision:

NOTES:

COPYRIGHT RELATED TO THE USE OF THIS DRAWING:
The use of this drawing shall be governed by standard copyright law as generally accepted in architectural practice.

ARCHITECT'S REQUIREMENTS AND APPROVALS:
It is the Builder's responsibility to notify MacKay-Lyons Sweetapple Architects Ltd. and to seek prior written approval for materials and workmanship which deviates from instructions provided by the Architect.

ENGINEER'S REQUIREMENTS AND APPROVALS:
It is the Builder's responsibility to notify MacKay-Lyons Sweetapple Architects Ltd. and to seek prior written approval for materials and workmanship which deviates from instructions provided by the Engineer.

AUTHORITIES' REQUIREMENTS AND APPROVALS:
All materials and workmanship must comply with the requirements of all authorities having jurisdication over the work. It is the Builder's responsibility to gain necessary approval from all relevant Authorities.

DIMENSIONS:
All dimensions must be verified on site. Do not scale off drawings. Plans take precedent over elevations. In the absence of dimensions, or if discrepancies exist, consult Architect. All minimum dimensions are to comply with the International Residential Code.

SHOP DRAWINGS:
Submit shop drawings to the Architect and Engineer for approval prior to manufacture of prefabricated elements of the building.

Cabin 1000
Millwork

scale: as noted
date: 16-05-20
drawn: MJ/JL
chk'd: BML

A602

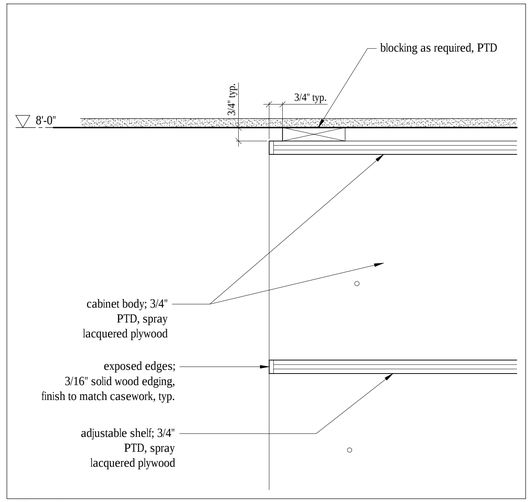

12 A603 **Closet - Section Detail**
Scale 3" = 1'-0"

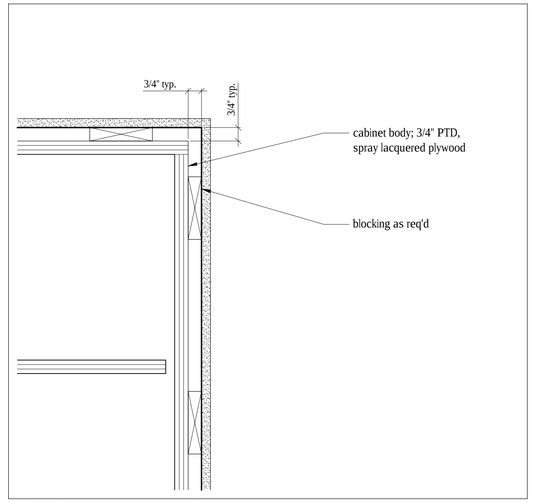

9 A603 **Closet- Section Detail**
Scale 3" = 1'-0"

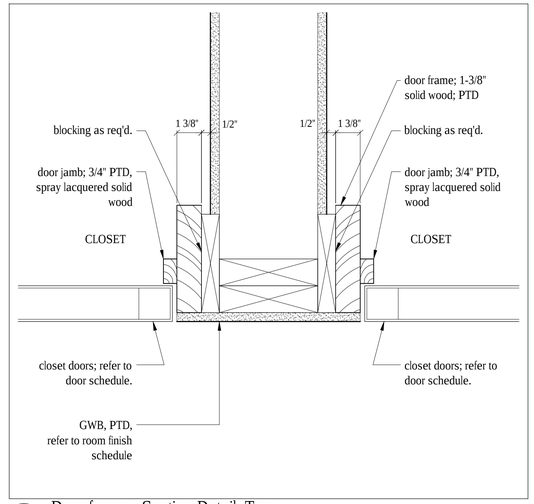

6 A603 **Door frame - Section Detail, Typ.**
Scale 3" = 1'-0"

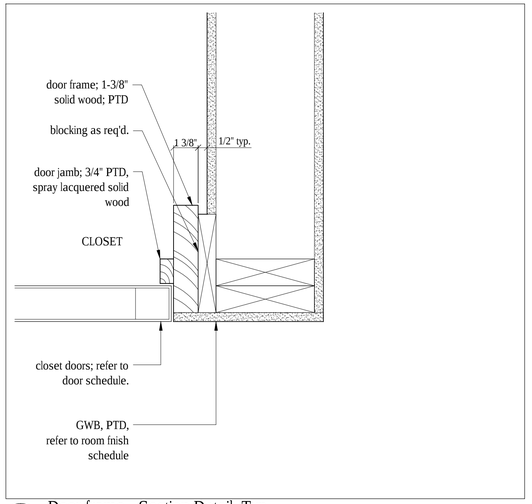

3 A603 **Door frame - Section Detail, Typ.**
Scale 3" = 1'-0"

11 A603 **Not in Use**

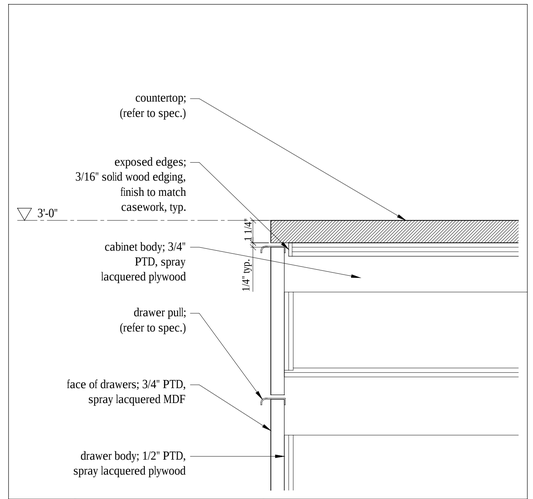

8 A603 **Bathroom vanity- Section Detail**
Scale 3" = 1'-0"

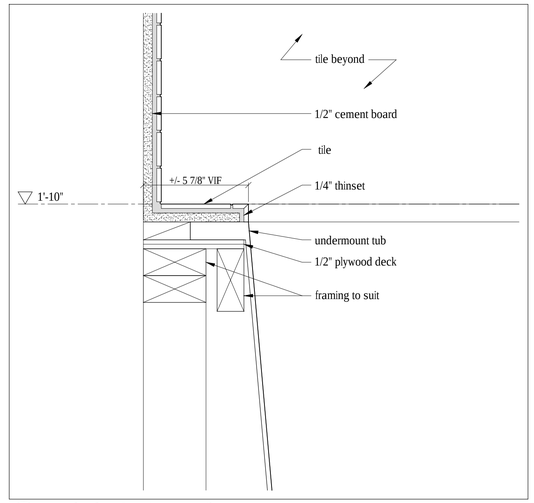

5 A603 **Bathtub - Section Detail**
Scale 3" = 1'-0"

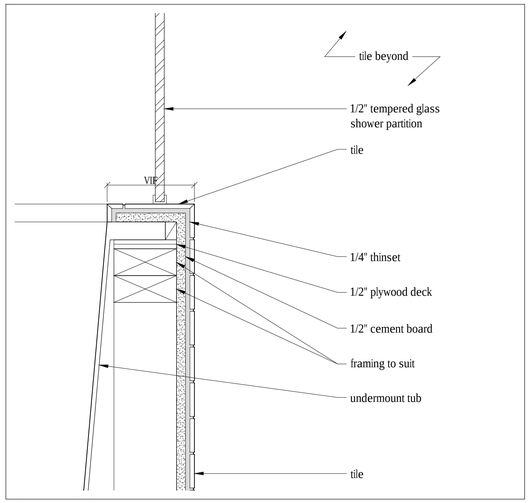

2 A603 **Bathtub - Section Detail**
Scale 1" = 1'-0"

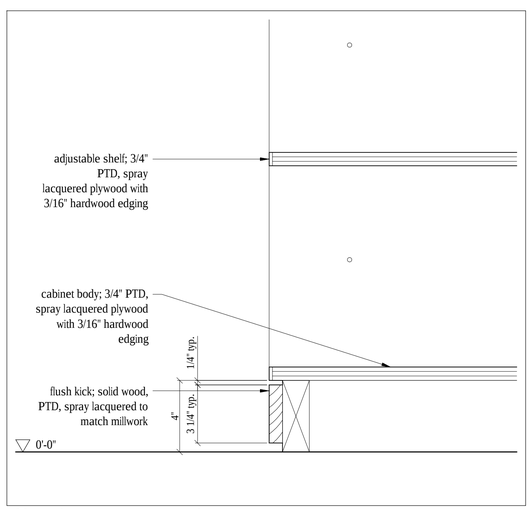

10 A603 **Closet - Section Detail**
Scale 3" = 1'-0"

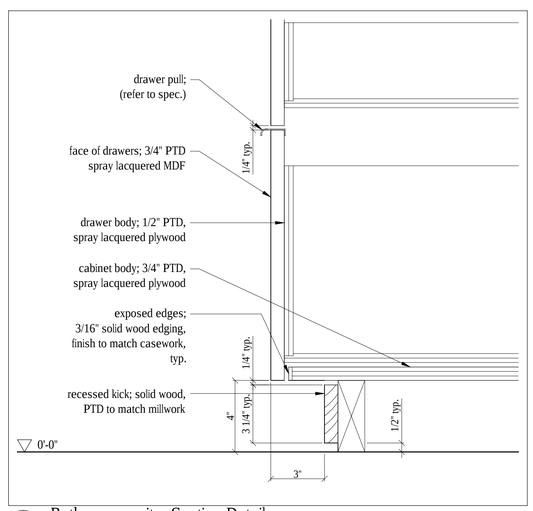

7 A603 **Bathroom vanity- Section Detail**
Scale 3" = 1'-0"

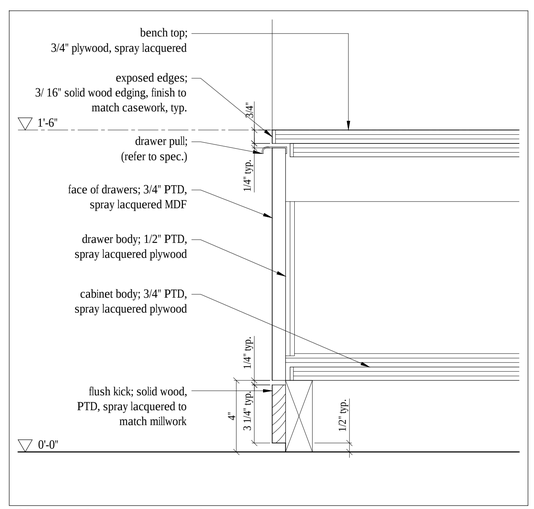

4 A603 **Bench - Section Detail**
Scale 3" = 1'-0"

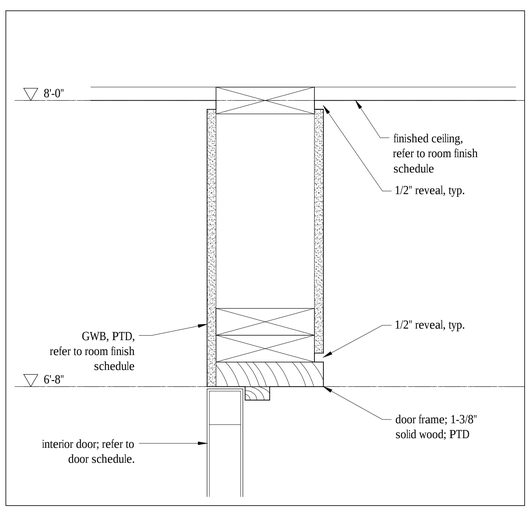

1 A603 **Closet - Section Detail**
Scale 3" = 1'-0"

Summit Horizon Neighborhood
Salt Lake City Utah

MacKay-Lyons Sweetapple Architects Limited
2188 Gottingen St.
Halifax, Nova Scotia
Canada B3K 3B4
ph: (902) 429.1867
fax: (902) 429.6276

STATE OF UTAH
Brian MacKay-Lyons
No. 9809836
LICENSED ARCHITECT

PLAN REVIEW ACCEPTANCE
FOR COMPLIANCE WITH THE APPLICABLE CONSTRUCTION CODES IDENTIFIED BELOW.

☒ BUILDING	☒ STRUCTURAL
☒ MECHANICAL	☒ PLUMBING
☒ ELECTRICAL	☒ ENERGY
☐ ACCESSIBILITY	☐ FIRE

PLAN REVIEW ACCEPTANCE OF DOCUMENTS DOES NOT AUTHORIZE CONSTRUCTION TO PROCEED IN VIOLATION OF ANY FEDERAL, STATE, OR LOCAL REGULATIONS.
BY: MEM DATE: 08/24/17
WEST COAST CODE CONSULTANTS, INC.

No.	Description	Date
02	Issued for Const. Rev. 1	21.07.2017
01	Issued for Construction	17.03.2017
Revision:		

NOTES:

COPYRIGHT RELATED TO THE USE OF THIS DRAWING:
The use of this drawing shall be governed by standard copyright law as generally accepted in architectural practice.

ARCHITECT'S REQUIREMENTS AND APPROVALS:
It is the Builder's responsibility to notify MacKay-Lyons Sweetapple Architects Ltd. and to seek prior written approval for materials and workmanship which deviates from instructions provided by the Architect.

ENGINEER'S REQUIREMENTS AND APPROVALS:
It is the Builder's responsibility to notify MacKay-Lyons Sweetapple Architects Ltd. and to seek prior written approval for materials and workmanship which deviates from instructions provided by the Engineer.

AUTHORITIES' REQUIREMENTS AND APPROVALS:
All materials and workmanship must comply with the requirements of all authorities having jurisdication over the work. It is the Builder's responsibility to gain necessary approval from all relevant Authorities.

DIMENSIONS:
All dimensions must be verified on site. Do not scale oll drawings. Plans take precedent over elevations. In the absence of dimensions, or if discrepancies exist, consult Architect. All minimum dimensions are to comply with the International Residential Code.

SHOP DRAWINGS:
Submit shop drawings to the Architect and Engineer for approval prior to manufacture of prefabricated elements of the building.

Cabin 1000

Millwork Details

scale: as noted
date: 16-05-20
drawn: MJ/JL
chk'd: BML

A603

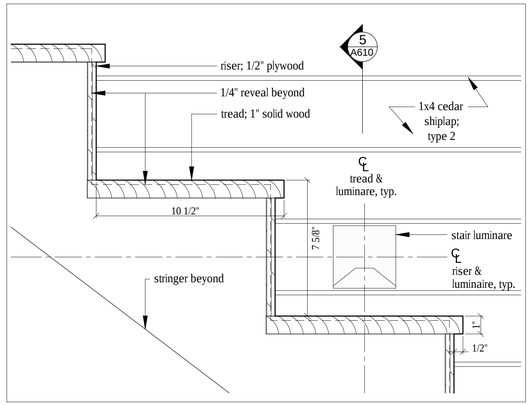

9 A610 **Stair detail**
3"=1'-0"

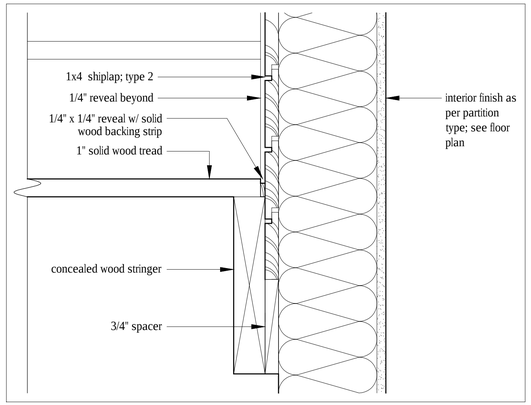

8 A610 **Stair detail**
3"=1'-0"

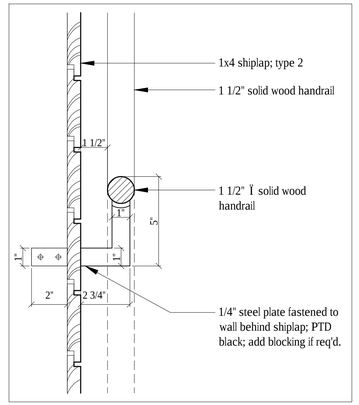

6 A610 **Handrail section detail**
3"-1'-0"

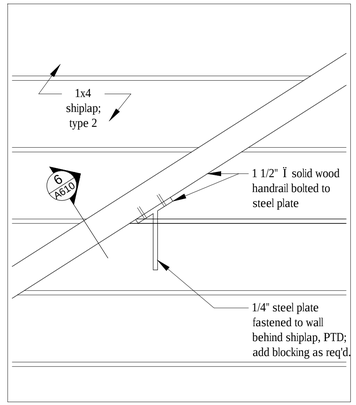

4 A610 **Handrail connection detail**
3"=1'-0"

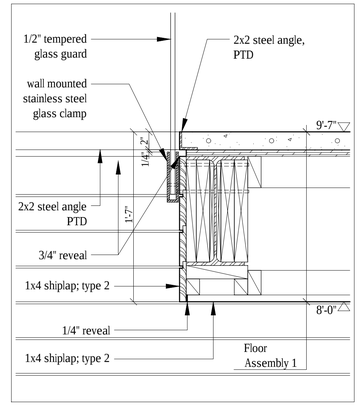

2 A610 **Guard Connection Detail**
1-1/2"=1'-0"

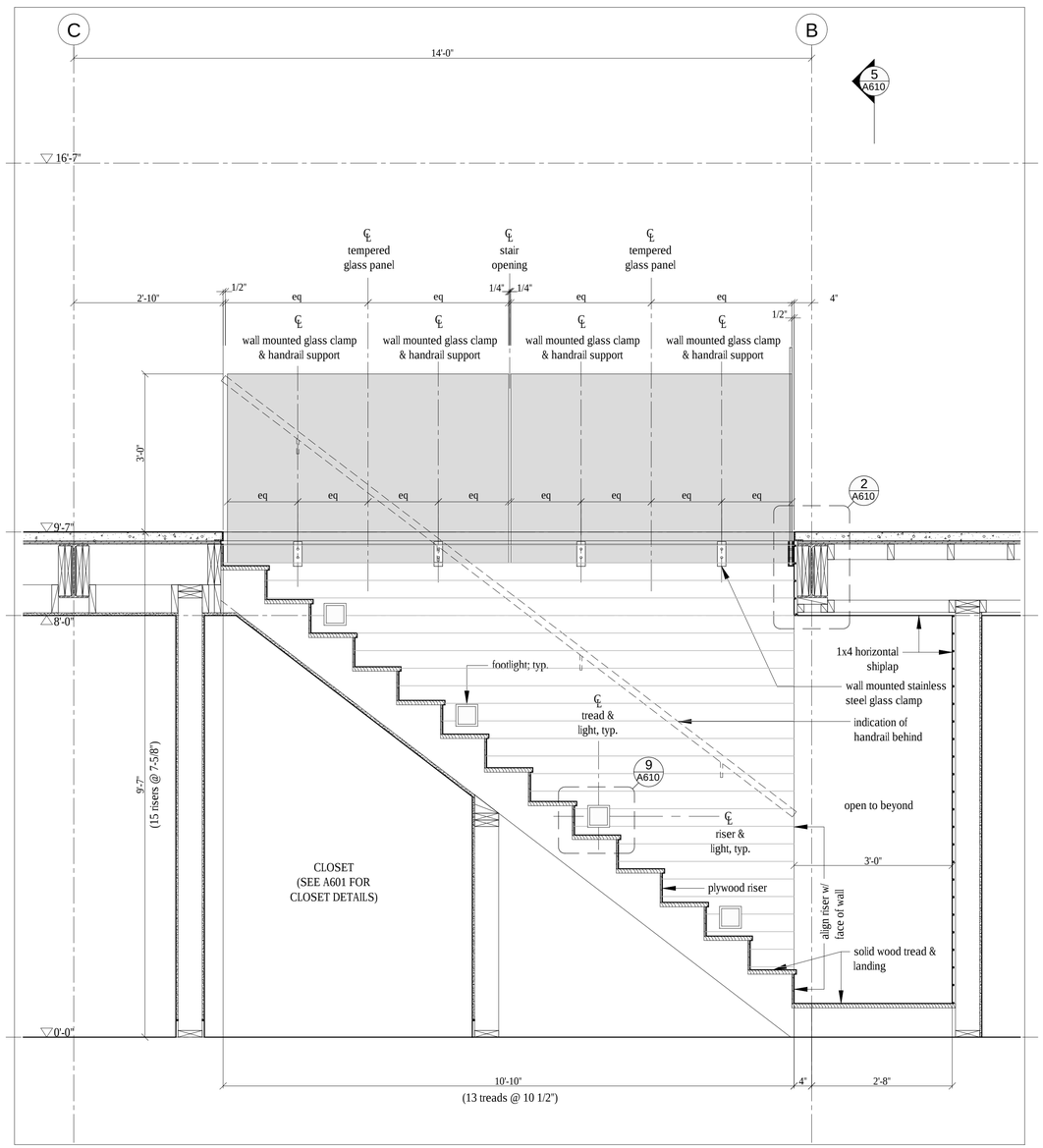

7 A610 **Stair section**
3/4"=1'-0"

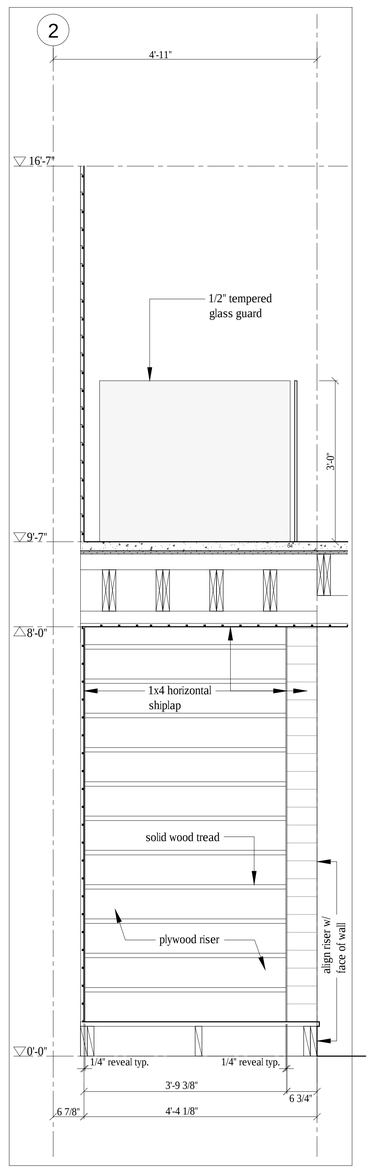

5 A610 **Stair Section**
3/4"=1'-0"

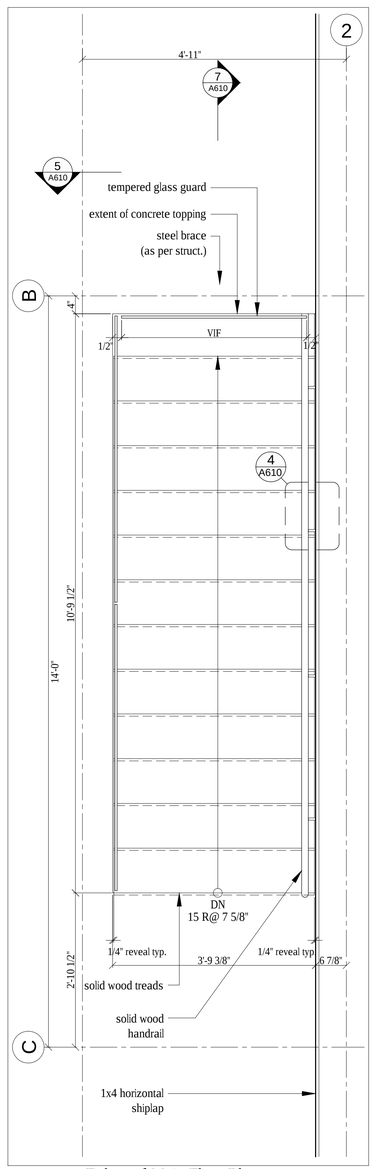

3 A610 **Enlarged Main Floor Plan**
3/4"=1'-0"

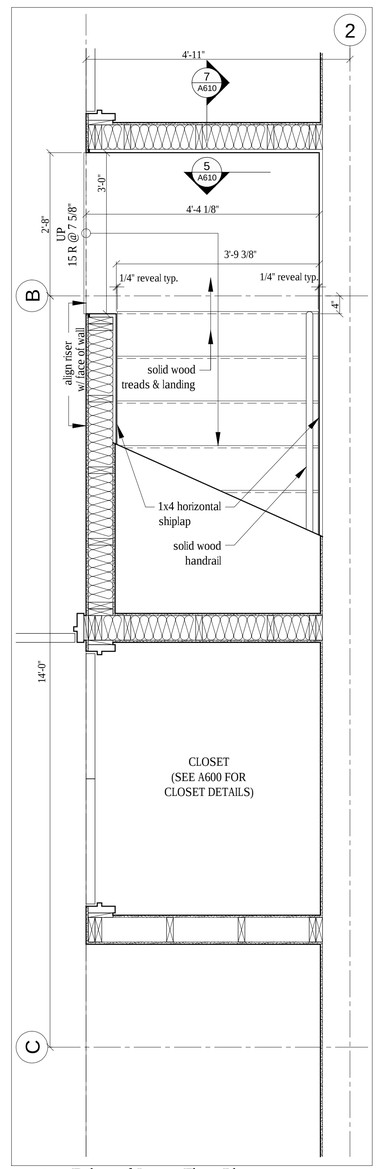

1 A610 **Enlarged Lower Floor Plan**
3/4"=1'-0"

Horizon Neighborhood
Summit Powder Mountain
Eden, Utah

MacKay-Lyons Sweetapple Architects Limited
2188 Gottingen St.
Halifax, Nova Scotia
Canada B3K 3B4
ph: (902) 429.1867
fax: (902) 429.6276

STATE OF UTAH
Brian MacKay-Lyons
No. 9809836
LICENSED ARCHITECT

PLAN REVIEW ACCEPTANCE
FOR COMPLIANCE WITH THE APPLICABLE CONSTRUCTION CODES IDENTIFIED BELOW.
☒ BUILDING ☒ STRUCTURAL
☒ MECHANICAL ☒ PLUMBING
☒ ELECTRICAL ☒ ENERGY
☐ ACCESSIBILITY ☐ FIRE
PLAN REVIEW ACCEPTANCE OF DOCUMENTS DOES NOT AUTHORIZE CONSTRUCTION TO PROCEED IN VIOLATION OF ANY FEDERAL, STATE, OR LOCAL REGULATIONS.
BY: MEM DATE: 08/24/17
WEST COAST CODE CONSULTANTS, INC.

No.	Description	Date
02	Issued for Const. Rev. 1	21.07.2017
01	Issued for Construction	17.03.2017

Revision:

NOTES:

COPYRIGHT RELATED TO THE USE OF THIS DRAWING:
The use of this drawing shall be governed by standard copyright law as generally accepted in architectural practice.

ARCHITECT'S REQUIREMENTS AND APPROVALS:
It is the Builder's responsibility to notify MacKay-Lyons Sweetapple Architects Ltd. and to seek prior written approval for materials and workmanship which deviates from instructions provided by the Architect.

ENGINEER'S REQUIREMENTS AND APPROVALS:
It is the Builder's responsibility to notify MacKay-Lyons Sweetapple Architects Ltd. and to seek prior written approval for materials and workmanship which deviates from instructions provided by the Engineer.

AUTHORITIES' REQUIREMENTS AND APPROVALS:
All materials and workmanship must comply with the requirements of all authorities having jurisdication over the work. It is the Builder's responsibility to gain necessary approval from all relevant Authorities.

DIMENSIONS:
All dimensions must be verified on site. Do not scale off drawings. Plans take precedent over elevations. In the absence of dimensions, or if discrepancies exist, consult Architect. All minimum dimensions are to comply with the International Residential Code.

SHOP DRAWINGS:
Submit shop drawings to the Architect and Engineer for approval prior to manufacture of prefabricated elements of the building.

Cabin 1000
Stair

scale: varies
date: 16-04-20
drawn: MJ/JE
chk'd: BML

A610

Ramp Dimension Table

	Fin. Floor Elev.	Ramp Length	Landing Elev.	Vertical Rise	Slope (16% max)
Unit 11	8726'-0"	40'-0"	8723'-6"	2'-6"	6.25%
Unit 13	8801'-6"	40'-0"	8799'-6"	2'-0"	5%
Unit 16	8756'-0"	38'-0"	8753'-6"	2'-6"	6.6%
Unit 19	8728'-6"	stair required	8823'-6"	n/a	n/a
Unit 21	8737'-0"	40'-0"	8734'-6"	2'-6"	6.25%
Unit 26	8709'-0"	40'-0"	8706'-6"	2'-6"	6.25%
Unit 27	8727'-0"	48'-0"	8724'-6"	2'-6"	5.21%
Unit 29	8764'-6"	40'-0"	8764'-6"	0'-0"	0%

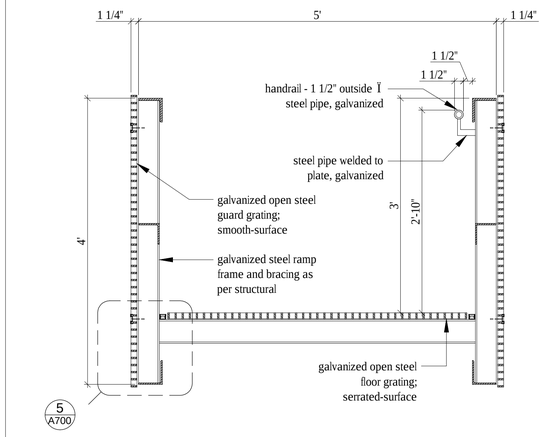

4 A700 **Section**
Scale 1" = 1'-0"

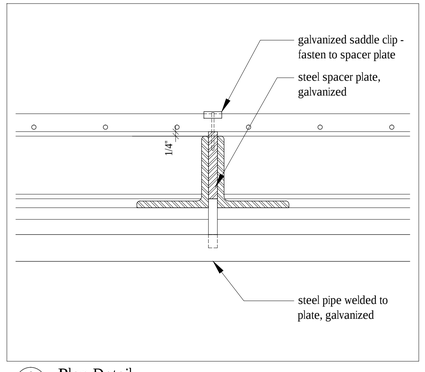

6 A700 **Plan Detail**
Scale 1" = 1'-0"

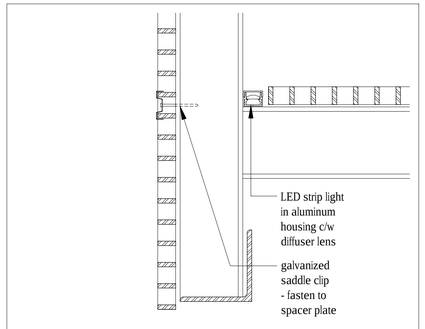

5 A700 **Section Detail**
Scale 3" = 1'-0"

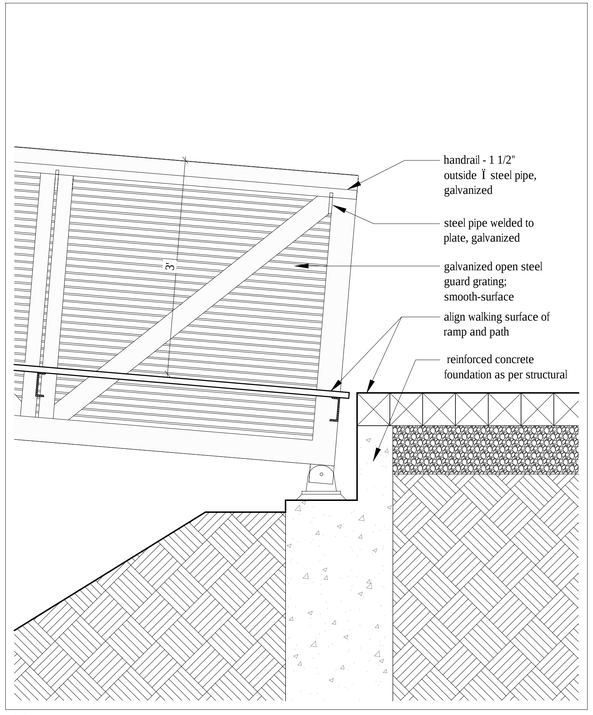

3 A700 **Section**
Scale 1" = 1'-0"

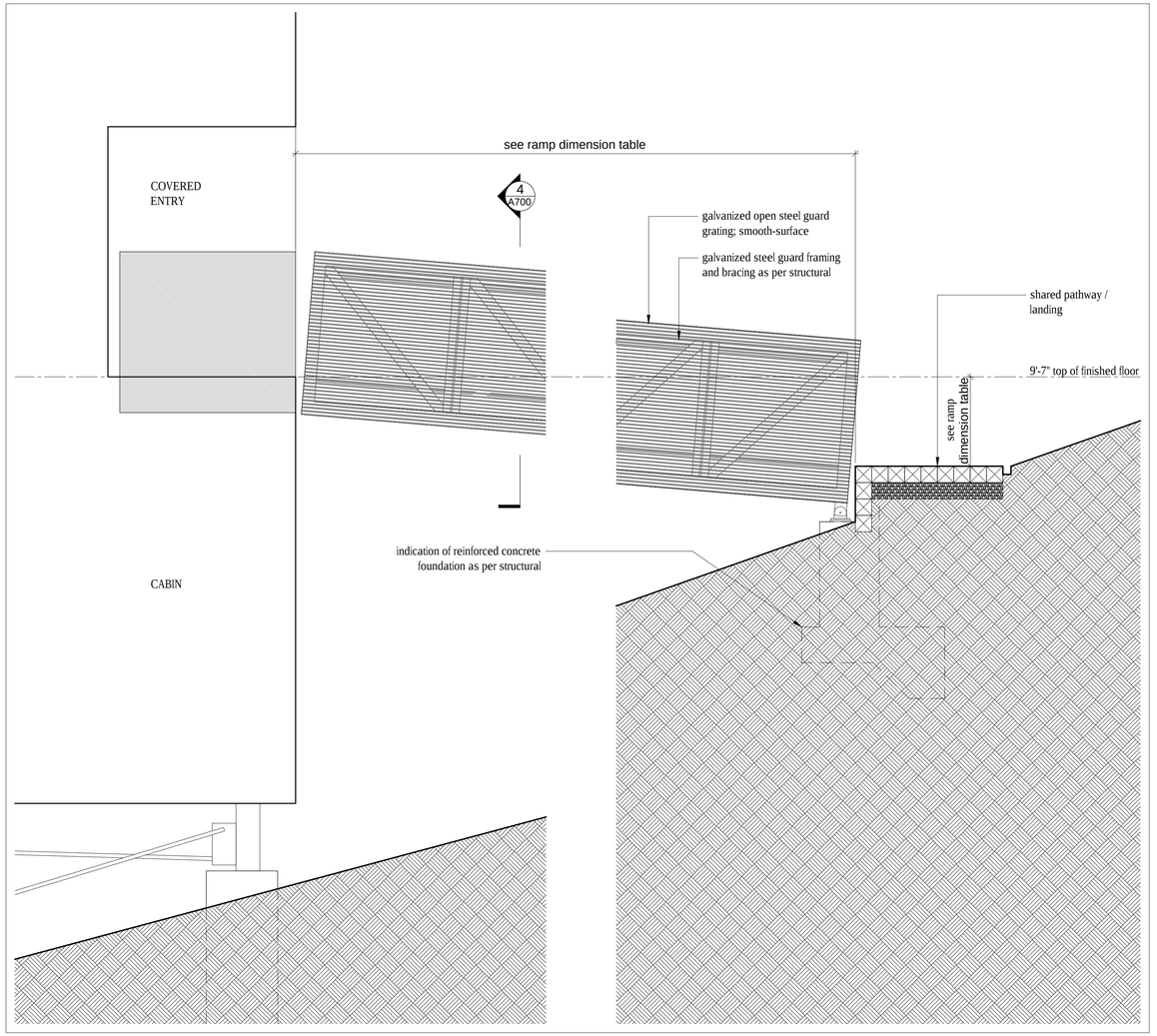

2 A700 **Partial Elevation @ Ramp**
Scale 1" = 1'-0"

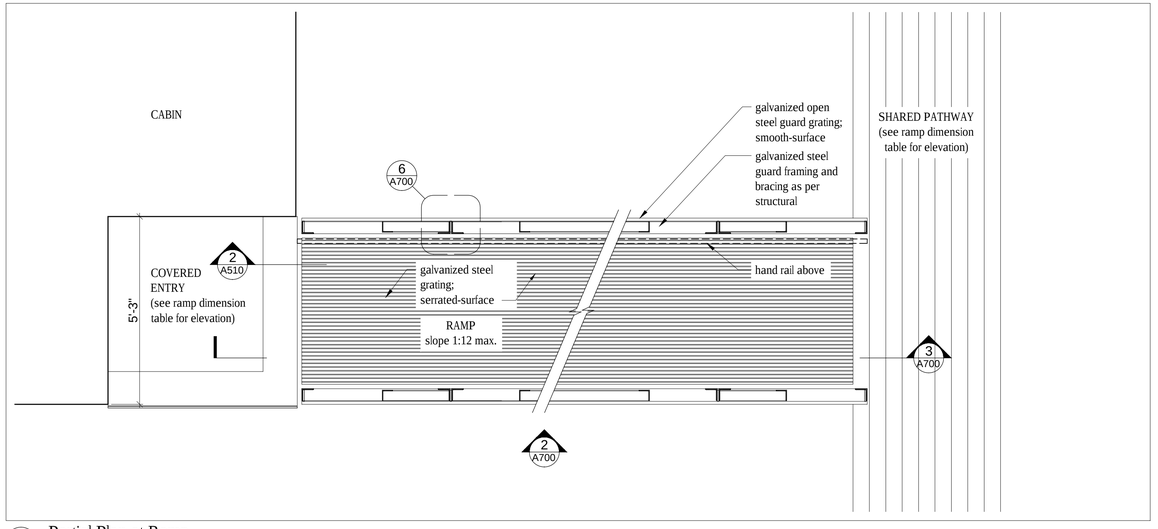

1 A700 **Partial Plan at Ramp**
Scale 1" = 1'-0"

Summit Horizon Neighborhood

Salt Lake City Utah

MacKay-Lyons Sweetapple Architects Limited

2188 Gottingen St. Halifax, Nova Scotia Canada B3K 3B4

ph: (902) 429.1867
fax: (902) 429.6276

STATE OF UTAH
Brian MacKay-Lyons
No. 9809836
LICENSED ARCHITECT

PLAN REVIEW ACCEPTANCE
FOR COMPLIANCE WITH THE APPLICABLE CONSTRUCTION CODES IDENTIFIED BELOW.

- [X] BUILDING
- [X] MECHANICAL
- [X] ELECTRICAL
- [ ] ACCESSIBILITY
- [X] STRUCTURAL
- [X] PLUMBING
- [X] ENERGY
- [ ] FIRE

PLAN REVIEW ACCEPTANCE OF DOCUMENTS DOES NOT AUTHORIZE CONSTRUCTION TO PROCEED IN VIOLATION OF ANY FEDERAL, STATE, OR LOCAL REGULATIONS.

BY: MEM DATE: 08/24/17

WEST COAST CODE CONSULTANTS, INC.

No.	Description	Date
02	Issued for Const. Rev. 1	21.07.2017
01	Issued for Construction	17.03.2017

Revision:

NOTES:

COPYRIGHT RELATED TO THE USE OF THIS DRAWING:
The use of this drawing shall be governed by standard copyright law as generally accepted in architectural practice.

ARCHITECT'S REQUIREMENTS AND APPROVALS:
It is the Builder's responsibility to notify MacKay-Lyons Sweetapple Architects Ltd. and to seek prior written approval for materials and workmanship which deviates from instructions provided by the Architect.

ENGINEER'S REQUIREMENTS AND APPROVALS:
It is the Builder's responsibility to notify MacKay-Lyons Sweetapple Architects Ltd. and to seek prior written approval for materials and workmanship which deviates from instructions provided by the Engineer.

AUTHORITIES' REQUIREMENTS AND APPROVALS:
All materials and workmanship must comply with the requirements of all authorities having jurisdication over the work. It is the Builder's responsibilty to gain necessary approval from all relevant Authorities.

DIMENSIONS:
All dimensions must be verified on site. Do not scale off drawings. Plans take precedent over elevations. In the absence of dimensions, or if discrepancies exist, consult Architect. All minimum dimensions are to comply with the International Residential Code.

SHOP DRAWINGS:
Submit shop drawings to the Architect and Engineer for approval prior to manufacture of prefabricated elements of the building.

Ramp Details

scale: varies
date: 16-05-24
drawn: MJ/DP
chk'd: BML

A700

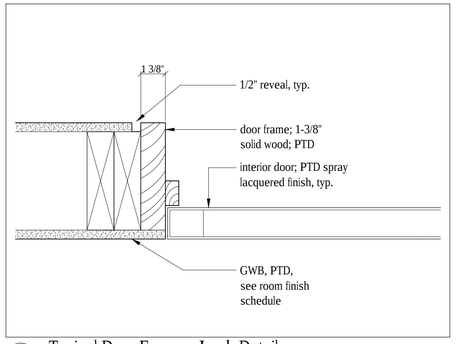

3 A900 Typical Door Frame - Jamb Detail

Scale 3" = 1'-0"

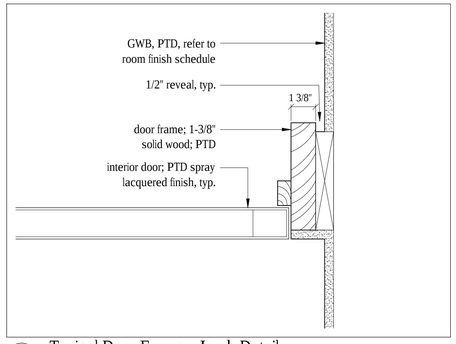

2 A900 Typical Door Frame - Jamb Detail

Scale 3" = 1'-0"

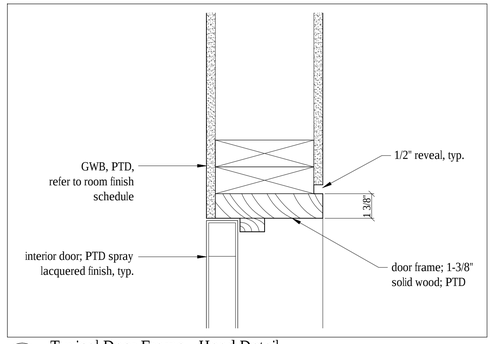

2 A900 Typical Door Frame - Head Detail

Scale 3" = 1'-0"

NOTES:

1. Curtainwall window frames to be OLDCASTLE RELIANCE - SS series clear anodized aluminum, 0.32 U-factor.
2. Casement Operators in Curtainwall window frames to be OLDCASTLE ZERO SIGHTLINE SERIES 30P clear anodized aluminum finish, 0.32 U-factor. Outswing operation typical.
3. Storefront window frames to be OLDCASTLE SERIES 3000 THERMAL MULTIPLANE series clear anodized aluminum finish, 0.32 U-factor. Indicated with grey tone.
4. Casement Operators in storefront window frames to be OLDCASTLE S-3375, 0.32 U-factor. Outswing operation typical, inswing operation where indicated.
5. Entrance door to be OLDCASTLE AD-375 THERMAL ENTRANCE series clear anodized aluminum finish, 0.44 U-factor. Outswing.
6. Sliding Doors to be OLDCASTLE TerraSlide 60E - OX Slider series clear anodized aluminum finish, 0.47 U-factor.
7. Skylight to be OLDCASTLE BMS-3000 SKYLIGHT series clear anodized aluminum finish, 0.38 U-factor.
8. All glazed entry doors and sliders to have keyed entry lever and deadbolt. Information to be provided as part of glazing shop drawings and reviewed by architect.
9. The sizes are rough openings. It is the contractor's responsibility to determine finished frames.
10. All operable windows to have screens. Review screen type with architect prior to installation.
11. All inswinging casement operators to be equipped with inswing operable screens.
12. All window head / sill / jamb flashing to be black annodized aluminum to match windows.
13. All window head / sill / jamb assembly details to be designed by window manufacturer and approved by the architect.
14. All operable windows to be outswing unless otherwise noted.
15. All joints of door cladding to align with joints of wall cladding when doors are in closed position.
16. All window dimensions in this drawing to be verified in field prior to fabrication.
17. Provide shop drawings for all windows and doors for review by architect prior to fabrication and installation.
18. All glazing 18" or less from the finished floor to be be tempered, unless otherwise noted
19. Refer to floor plans for door swing directions.
20. TG indicates tempered glazing.
21. All U-factors shall be determined by testing in accordance with NFRC 100 and labeled as such by the manufacturer, per IECC R402.3.

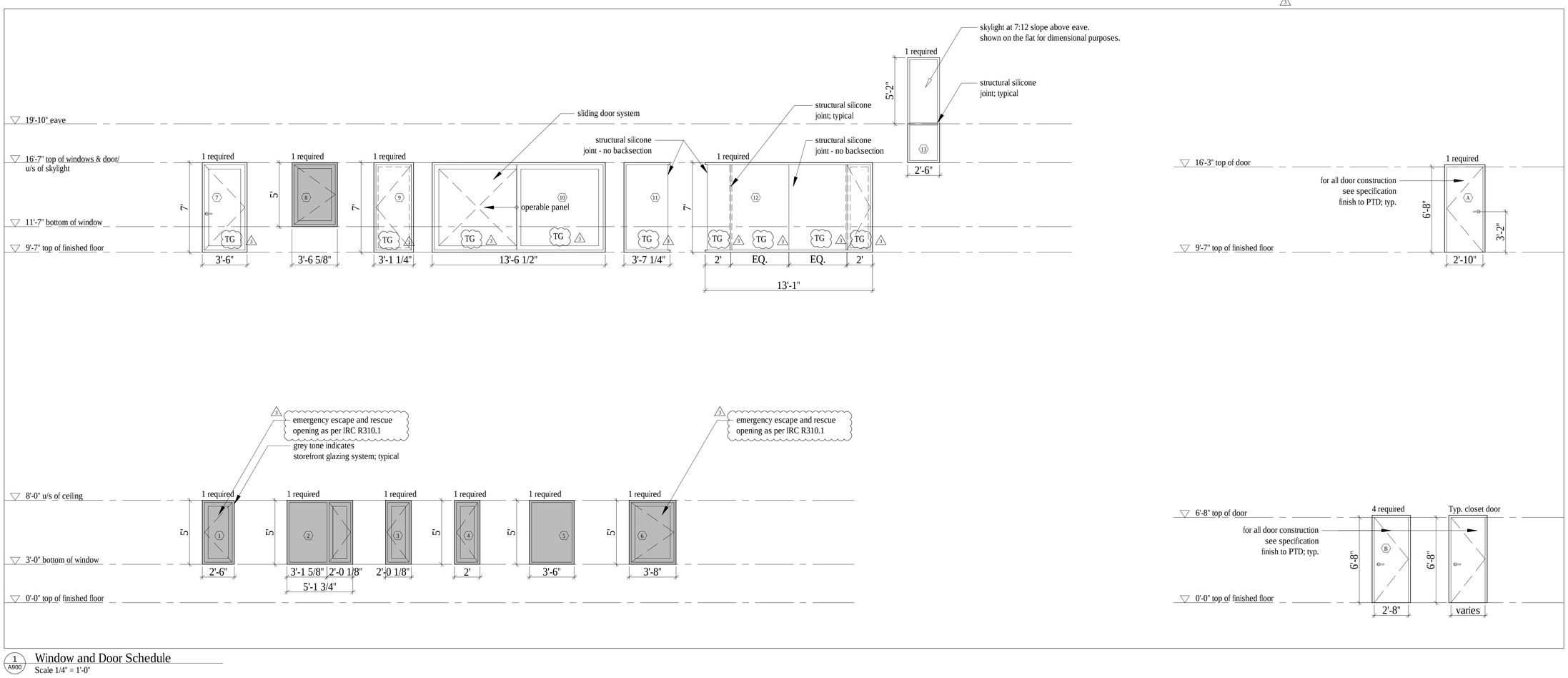

1 A900 Window and Door Schedule

Scale 1/4" = 1'-0"

Horizon Neighborhood
CABINS

Summit Powder Mountain
Eden, Utah

MacKay-Lyons
Sweetapple

Architects
Limited

2188 Gottingen St.
Halifax, Nova Scotia
Canada B3K 3B4

ph: (902) 429.1867
fax: (902) 429.6276

STATE OF UTAH
Brian MacKay-Lyons
No. 9809836
LICENSED ARCHITECT

PLAN REVIEW ACCEPTANCE

FOR COMPLIANCE WITH THE APPLICABLE CONSTRUCTION CODES IDENTIFIED BELOW.

- [X] BUILDING
- [X] MECHANICAL
- [X] ELECTRICAL
- [ ] ACCESSIBILITY
- [X] STRUCTURAL
- [X] PLUMBING
- [X] ENERGY
- [ ] FIRE

PLAN REVIEW ACCEPTANCE OF DOCUMENTS DOES NOT AUTHORIZE CONSTRUCTION TO PROCEED IN VIOLATION OF ANY FEDERAL, STATE, OR LOCAL REGULATIONS.

BY: MEM DATE: 08/24/17

WEST COAST CODE CONSULTANTS, INC.

No.	Description	Date
03	Issued for Const. Rev. 2	15.08.2017
02	Issued for Const. Rev. 1	21.07.2017
01	Issued for Construction	17.03.2017

Revision:

NOTES:

COPYRIGHT RELATED TO THE USE OF THIS DRAWING:
The use of this drawing shall be governed by standard copyright law as generally accepted in architectural practice.

ARCHITECT'S REQUIREMENTS AND APPROVALS:
It is the Builder's responsibility to notify MacKay-Lyons Sweetapple Architects Ltd. and to seek prior written approval for materials and workmanship which deviates from instructions provided by the Architect.

ENGINEER'S REQUIREMENTS AND APPROVALS:
It is the Builder's responsibility to notify MacKay-Lyons Sweetapple Architects Ltd. and to seek prior written approval for materials and workmanship which deviates from instructions provided by the Engineer.

AUTHORITIES' REQUIREMENTS AND APPROVALS:
All materials and workmanship must comply with the requirements of all authorities having jurisdication over the work. It is the Builder's responsibilty to gain necessary approval from all relevant Authorities.

DIMENSIONS:
All dimensions must be verified on site. Do not scale off drawings. Plans take precedent over elevations. In the absence of dimensions, or if discrepancies exist, consult Architect. All minimum dimensions are to comply with the International Residential Code.

SHOP DRAWINGS:
Submit shop drawings to the Architect and Engineer for approval prior to manufacture of prefabricated elements of the building.

Cabin 1000

Window Door Schedule

scale: noted
date: 16-06-24
drawn: MJ
chk'd: BML

A900

GENERAL STRUCTURAL NOTES

1. IN ALL CASES, "CONTRACTOR" SHALL REFER TO THE CONTRACTOR OR SUB-CONTRACTOR RESPONSIBLE FOR THE TRADE SPECIFICALLY REFERRED TO IN THE NOTES (i.e. STEEL, CONCRETE, MASONRY). THE "CONTRACTOR" SHALL MEET ALL NOTE REQUIREMENTS AND SHALL INCLUDE THE COSTS ASSOCIATED WITH THESE REQUIREMENTS IN HIS/HER BID. THE GENERAL CONTRACTOR, OR CONSTRUCTION MANAGER, IS ULTIMATELY RESPONSIBLE FOR COMPLIANCE WITH ALL NOTE REQUIREMENTS.
2. THE CONTRACTOR SHALL PERFORM HIS/HER TRADE AND DUTIES IN A MANNER CONFORMING TO THE PROCEDURES AND REQUIREMENTS AS STATED IN THE 2015 INTERNATIONAL BUILDING CODE (IBC), AND/OR LATEST CODE ADOPTED BY THE LOCAL BUILDING OFFICIAL, AND ALL LOCAL ORDINANCES.
3. THE GENERAL CONTRACTOR, OR PROJECT MANAGER, SHALL COORDINATE THE WORK PERFORMED BY ALL TRADES.
4. THE CONTRACTOR SHALL NOTIFY THE ENGINEER AND/OR ARCHITECT OF ANY DISCREPANCIES, OMISSIONS OR CONFLICTS BETWEEN THE VARIOUS ELEMENTS OF THE WORKING DRAWINGS AND/OR THE SPECIFICATIONS BEFORE PROCEEDING WITH ANY WORK INVOLVED. IN ALL CASES, UNLESS OTHERWISE DIRECTED, THE MOST STRINGENT REQUIREMENTS SHALL GOVERN AND BE PERFORMED.
5. THE CONTRACTOR SHALL VERIFY ALL CONDITIONS, DIMENSIONS, SLOPES AND ELEVATIONS, ETC.. AT THE JOB SITE AND SHALL COORDINATE THESE WITH THE ARCHITECT AND WITH ALL TRADES. CONSTRUCTION DRAWINGS SHALL NOT BE SCALED FOR DIMENSIONS.
6. VISITS TO THE JOB SITE BY REPRESENTATIVES OF THE ENGINEER DO NOT CONSTITUTE APPROVAL OF THE WORK PERFORMED BY THE CONTRACTOR OR HIS SUBCONTRACTORS; THEY ARE MERELY FOR THE PURPOSE OF OBSERVATION.
7. SHOP DRAWINGS FOR ANY FABRICATED COMPONENTS OR COMPONENTS DESIGNED-BY-MANUFACTURER SHALL BE APPROVED BY THE ENGINEER AND ARCHITECT PRIOR TO FABRICATION AND ERECTION. SHOP DRAWINGS SHALL BE STAMPED BY A PROFESSIONAL ENGINEER REGISTERED IN THE SAME STATE AS THE PROJECT.
8. THE CONTRACTOR SHALL VERIFY SIZES, LOCATIONS, LOADS, AND EQUIPMENT ANCHORAGE IN THE FIELD WITH THE EQUIPMENT MANUFACTURER (OR SUPPLIER) PRIOR TO FABRICATION OR INSTALLATION OF SUPPORTING STRUCTURES.
9. TEMPORARY SHORING (BRACING) SHALL BE PROVIDED WHERE NECESSARY. SHORING SHALL SUPPORT ALL LOADS TO WHICH THE STRUCTURE MAY BE SUBJECTED (i.e. WIND). SHORING SHALL REMAIN IN PLACE AS LONG AS MAY BE REQUIRED FOR SAFETY OR UNTIL ALL THE STRUCTURAL ELEMENTS ARE COMPLETED. ALL SHORING IS THE RESPONSIBILITY OF THE CONTRACTOR
10. DURING AND AFTER CONSTRUCTION, THE CONTRACTOR AND OWNER SHALL KEEP LOADS ON THE STRUCTURE WITHIN THE LIMITS OF THE DESIGN LOADS FOR THE OCCUPANCY. SEE STRUCTURAL PLANS AND CALCULATIONS FOR STRUCTURAL DESIGN LOADINGS AND CRITERIA.
11. ANY SPECIAL INSPECTION REQUIRED BY THE CONSTRUCTION DOCUMENTS, OR BY THE BUILDING OFFICIAL, OR BY THE IBC, IS THE RESPONSIBILITY OF THE CONTRACTOR TO COORDINATE ON BEHALF OF THE OWNER.
12. CONTRACTOR SHALL BE RESPONSIBLE FOR SAFETY AND PROTECTION WITHIN AND ADJACENT TO THE JOB SITE.
13. PRIOR APPROVAL, IN WRITING, FROM THE ENGINEER IS REQUIRED FOR ANY DEVIATION FROM THE STRUCTURAL PLANS AND/OR CONSTRUCTION DOCUMENTS. OPTIONAL MEMBER SIZES AND VARIATIONS IN THE FRAMING REQUIRE PRIOR APPROVAL OF THE ENGINEER, ARCHITECT AND OWNER. FAILURE TO FOLLOW PLANS AND CONSTRUCTION DOCUMENTS CONSTITUTES CHANGE IN PROJECT SCOPE.
14. SEE STRUCTURAL PLANS FOR ADDITIONAL STRUCTURAL NOTES AND REQUIREMENTS.
15. THE ENGINEER RESERVES THE RIGHT TO REQUEST REPLACEMENT OF ANY PORTION OF THE STRUCTURE DEVIATING FROM THE PLANS WHERE WRITTEN PRIOR APPROVAL HAS NOT BEEN OBTAINED AND WHERE INSPECTION BY THE ENGINEER PRIOR TO CONSTRUCTION OF THE CHANGED PORTION HAS NOT HAPPENED.
16. ALL SITE WORK, GRADING, COMPACTION AND BACKFILL, ETC. SHALL BE DONE IN COMPLIANCE WITH A GEOTECHNICAL REPORT SPECIFIC TO THE SITE. IT IS THE GENERAL CONTRACTORS RESPONSIBILITY TO OBTAIN A GEOTECHNICAL REPORT, IF ONE HAS NOT ALREADY BEEN OBTAINED, AND SUBMIT A COPY TO THE ENGINEER FOR VERIFICATION.
17. ALL ANCHORING ADHESIVE SHALL BE SIMPSON SET-XP EPOXY OR HILTI HIT-HY200 MAX-SD ADHESIVE. ANCHORS SHALL BE INSTALLED PER MANUFACTURERS INSTRUCTIONS.
18. ALL NON-EPOXIED POST-INSTALLED ANCHORS TO BE SIMPSON STRONG-BOLT 2 WEDGE ANCHORS, TITEN HD SCREW ANCHORS, HILTI KWIK HUS-EZ SCREW ANCHORS, OR HILTI KWIK BOLT TZ ANCHORS.
19. FASTENERS AND ANCHOR BOLTS USED IN PRESERVATIVE-TREATED WOOD SHALL BE HOT DIPPED ZINC-COATED GALVANIZED STEEL. THE COATING WEIGHTS SHALL BE IN ACCORDANCE WITH ASTM A 153.

GENERAL CONCRETE NOTES

1. SEE GENERAL STRUCTURAL NOTES FOR ADDITIONAL REQUIREMENTS.
2. ALL WORK SHALL BE IN STRICT ACCORDANCE WITH THE 2015 IBC, ACI 318, AND LOCAL ORDINANCES.
3. CONTRACTOR SHALL VERIFY ALL CONDITIONS AND DIMENSIONS PRIOR TO PLACING CONCRETE.
4. CONTRACTOR SHALL COORDINATE WITH MECHANICAL, ELECTRICAL, AND ARCHITECTURAL PRIOR TO PLACING CONCRETE. PROVIDE SLEEVES, BLOCK OUTS, ETC... AS REQUIRED.
5. CONTRACTOR SHALL BE RESPONSIBLE FOR PROPER PLACEMENT OF ALL ANCHOR BOLTS, SEISMIC ANCHORS OR STRAPS, ETC.. INSTALL PER MANUFACTURER'S SPECIFICATIONS.
6. THE CONTRACTOR IS RESPONSIBLE FOR PROVIDING ALL FORM WORK, POUR STOPS, ETC. REQUIRED TO CONSTRUCT ALL CONCRETE WORK. SUCH FORM WORK IS NOT NECESSARILY SHOWN ON THE STRUCTURAL PLANS OR DETAILS. THE CONTRACTOR SHALL SPECIFY ALL FORM WORK AND SHALL INCLUDE THE COST FOR SUCH IN HIS/HER ORIGINAL BID.
7. CONTRACTOR SHALL PROVIDE ALL SHORING AS REQUIRED.
8. FOOTINGS, FOUNDATION AND SLABS ON GRADE SHALL BE CONSTRUCTED ON PROPERLY COMPACTED NATURAL SOIL, OR ON STRUCTURAL FILL.
9. SEE FOUNDATION PLAN FOR ADDITIONAL NOTES AND REQUIREMENTS.

CONCRETE & REINFORCEMENT

10. ALL CONCRETE SHALL HAVE A MINIMUM COMPRESSIVE STRENGTH OF 3,000 PSI IN 28 DAYS. FLAT SLABS, FOUNDATION WALLS, AND CONCRETE RETAINING WALLS SHALL HAVE A MINIMUM COMPRESSIVE STRENGTH OF 4,000 PSI. A COMPRESSIVE STRENGTH OF 2500 PSI HAS BEEN USED FOR CONCRETE DESIGN.
11. SEE PROJECT SPECIFICATIONS FOR CONCRETE DESIGN REQUIREMENTS.
12. ALL REINFORCING STEEL SHALL BE DEFORMED BARS CONFORMING TO THE STANDARD SPECIFICATIONS ASTM A615 GRADE 60. REINFORCING STEEL SHALL BE PROPERLY TIED INTO PLACE PRIOR TO PLACING CONCRETE.
13. ALL REINFORCING STEEL SHALL BE DETAILED AND PLACED IN ACCORDANCE WITH THE ACI DETAILING MANUAL AND ACI STANDARDS (LATEST EDITION).
14. ALL SPLICES IN CONTINUOUS CONCRETE REINFORCING BARS SHALL LAP A MINIMUM OF 40 BARdiaS. ALL SPLICES SHALL BE MADE IN A COMPRESSION ZONE UNLESS NOTED. ALL CONTINUOUS REINFORCING SHALL TERMINATE WITH A 90 DEG. BEND OR WITH SEPARATE CORNER BARS.

FOUNDATION WALLS

15. SEE FOUNDATION WALL SCHEDULE, OR FOUNDATION PLAN, FOR SPECIFICATION OF FOUNDATION WALL REINFORCEMENT.
16. FOUNDATION WALLS HAVE BEEN DESIGNED USING AN EQUIVALENT FLUID PRESSURE. SEE STRUCTURAL PLANS AND CALCULATIONS FOR ACTUAL FLUID PRESSURE USED.
17. BACKFILL ADJACENT TO FOUNDATION WALLS OR IN LANDSCAPED AREAS SHALL BE PLACED IN LOOSE LIFTS A MAXIMUM OF EIGHT INCHES (8"). FILL SHALL HAVE A MOISTURE CONTENT WITHIN 2% OF OPTIMUM AND SHALL BE COMPACTED TO AT LEAST 90% MAXIMUM DENSITY (ASTM D 1557). HEAVY EQUIPMENT SHALL NOT BE USED TO BACKFILL WITHOUT PRIOR CONSENT OF THE ENGINEER.
18. THE CONTRACTOR SHALL COORDINATE STEPS IN WALLS WITH THE ARCHITECT, AND SHALL VERIFY WITH THE ENGINEER.

FOOTINGS

19. SEE FOOTING SCHEDULE FOR FOOTING SIZES AND REINFORCING REQUIREMENTS.
20. FOOTINGS HAVE BEEN DESIGNED USING AN ALLOWABLE BEARING PRESSURE. SEE STRUCTURAL PLANS AND CALCULATIONS FOR ACTUAL BEARING PRESSURE USED.
21. ALL EXTERIOR FOOTINGS SHALL BEAR BELOW FROST DEPTH. CONTRACTOR TO VERIFY.
22. THE CONTRACTOR SHALL COORDINATE STEPS IN FOOTINGS WITH THE ARCHITECT, AND SHALL VERIFY WITH THE ENGINEER.

GENERAL STEEL NOTES

1. SEE GENERAL STRUCTURAL NOTES FOR ADDITIONAL REQUIREMENTS.
2. ALL WORK TO BE IN STRICT ACCORDANCE WITH THE 2015 IBC, AISC, AND LOCAL ORDINANCES.
3. ALL DIMENSIONS AND CONDITIONS SHALL BE VERIFIED BY THE CONTRACTOR PRIOR TO FABRICATION AND ERECTION.
4. SEE SPECIFICATIONS FOR ADDITIONAL INFORMATION AND REQUIREMENTS.
5. SEE ARCHITECTURAL SHEETS FOR DECK BEARING ELEVATIONS. STRUCTURAL STEEL DETAILER SHALL DETERMINE ALL BEARING PLATE ELEVATIONS FROM ARCHITECTURAL DECK ELEVATIONS
6. SEE ARCHITECTURAL SHEETS FOR ADDITIONAL DIMENSIONS.
7. SEE ARCHITECTURAL FOR ACCESS HATCHES, DRAFT STOPS, ETC.
8. SUBMIT SHOP DRAWINGS OF ALL STRUCTURAL STEEL, STEEL JOISTS, STEEL DECKING & MISCELLANEOUS STEEL TO ENGINEER FOR APPROVAL PRIOR TO FABRICATION.
9. SEE FRAMING PLANS FOR ADDITIONAL NOTES AND REQUIREMENTS.

STRUCTURAL STEEL

10. ALL WIDE FLANGE MEMBERS TO BE MANUFACTURED UNDER ASTM A992.
11. ALL STRUCTURAL PLATES, CHANNELS & ANGLES TO BE MANUFACTURED UNDER ASTM A36
12. ALL HSS MEMBERS TO BE MANUFACTURED UNDER ASTM A500 GRADE B.
13. ALL PIPE COLUMNS TO BE MANUFACTURED UNDER ASTM A53 GRADE B.
14. ALL BOLTS FOR STEEL TO STEEL CONNECTIONS TO BE 3/4" DIA. MIN. A325-N HIGH STRENGTH BOLTS, UNLESS NOTED OTHERWISE. BOLTS EMBEDDED IN CONCRETE OR MASONRY SHALL BE F1554 GRADE 36 UNLESS NOTED OTHERWISE.
15. ALL JOIST WELDS TO BE E7024. ALL DECK WELDS TO BE E6022. ALL WELDS FOR SEISMIC SPECIFIC CONNECTIONS TO BE E7018. ALL OTHER WELDS TO BE 70 KSI MIN. ALL WELDS SHALL BE BY A CERTIFIED WELDER.
16. ALL WELDS AND BOLTING TO MEET APPROVAL OF SPECIAL INSPECTOR AS REQUIRED BY BUILDING OFFICIAL.
17. ALL STEEL SHALL BE PROPERLY PRIMED EXCEPT AREAS THAT REQUIRE FIELD WELDING (i.e. TOP OF BEAMS).
18. ALL STEEL BEAMS USED AS GIRDERS SHALL HAVE WEB STIFFENERS EACH SIDE OF WEB AT BEARING ENDS AND AT CONCENTRATED LOADS. STIFFENER TO BE SAME THICKNESS AS WEB OF BEAM-TYPICAL. STEEL BEAMS USED AS JOISTS DO NOT REQUIRE WEB STIFFENERS.
19. SEE ARCHITECTURAL, MECHANICAL & ELECTRICAL FOR ADDITIONAL STEEL MEMBERS (BRACKETS, ANGLES, ETC...) REQUIRED.
20. STEEL MEMBERS SHALL NOT BE CUT, DRILLED OR TORCHED FOR PIPES, ETC. UNLESS SPECIFICALLY DETAILED.
21. ANY MODIFICATION OF STRUCTURAL MEMBERS NOT SPECIFICALLY DETAILED ON THE STRUCTURAL PLANS IS NOT PERMITTED WITHOUT PRIOR APPROVAL.
22. ANY CONNECTIONS NOT DETAILED ON STRUCTURAL PLANS SHALL BE PROVIDED BY THE STEEL DETAILER. SHOP DRAWINGS FOR ALL FABRICATED STEEL CONNECTIONS SHALL BE SUBMITTED FOR REVIEW AND APPROVAL PRIOR TO FABRICATION AND INSTALLATION.

GENERAL WOOD FRAMING NOTES

1. SEE GENERAL STRUCTURAL NOTES FOR ADDITIONAL REQUIREMENTS.
2. ALL WORK TO BE IN STRICT ACCORDANCE WITH THE 2015 IBC, NDS, AND LOCAL ORDINANCES.

DIMENSIONAL LUMBER

3. DIMENSIONAL LUMBER USED AS STRUCTURAL FRAMING (i.e. JOISTS, RAFTERS, HEADERS) SHALL BE DOUGLAS FIR-LARCH № 2 OR EQUAL.
4. DIMENSIONAL LUMBER USED FOR STUD WALLS SHALL BE STUD GRADE UNLESS NOTED OTHERWISE. STUDS SHALL BE SPACED AT 16" O.C. MINIMUM, WITH A DOUBLE TOP PLATE. SPLICES IN THE DOUBLE TOP PLATE SHALL ALTERNATE TOP & BOTTOM AND SHALL LAP 48" MIN.
5. ROUGH CUT TIMBER USED AS STRUCTURAL FRAMING SHALL BE AS SPECIFIED IN THE CONSTRUCTION DOCUMENTS.

ENGINEERED LUMBER

6. GLU-LAMINATED BEAMS FOR SIMPLE SPANS SHALL BE 24F-V4 DF/DF. GLU-LAMINATED BEAMS FOR CONTINUOUS SPANS AND CANTILEVERS SHALL BE 24F-V8 DF/DF. DO NOT INSTALL GLU-LAMINATED BEAMS UPSIDE DOWN.
7. LAMINATED VENEER LUMBER AND THE LIKE SHALL BE INSTALLED PER MANUFACTURERS RECOMMENDATIONS AND SPECIFICATIONS. LVL BEAMS SHALL BE BUILT UP w/ 1 3/4" MEMBERS. SEE FRAMING PLANS FOR NUMBER OF MEMBERS REQUIRED.
8. I-JOISTS SHALL BE TJI OR EQUIVALENT, AND SHALL BE INSTALLED PER MANUFACTURERS RECOMMENDATIONS AND SPECIFICATIONS.
9. ENGINEERED LUMBER, WITH THE EXCEPTION OF EXTERIOR GRADE GLU-LAMINATED LUMBER, SHALL NOT BE USED IN EXTERIOR APPLICATIONS.
10. USE PRESSURE TREATED LUMBER FOR ALL WOOD IN CONTACT WITH CONCRETE OR MASONRY IN CONTACT WITH EARTH (i.e. MUD SILL). IN SOME SITUATIONS, 26 GAUGE GALVANIZED SHEET METAL MAY BE PROVIDED AS AN APPROVED MOISTURE BARRIER. SEE ENGINEER FOR APPROVAL OF THIS OPTION.

BLOCKING, BRIDGING & MISCELLANEOUS

11. DIMENSIONAL JOISTS AND RAFTERS SHALL HAVE FULL-HEIGHT SOLID BLOCKING AT THEIR BEARING POINTS. EACH RAFTER AND/OR ROOF TRUSS SHALL BE ANCHORED WITH SIMPSON H1 ANCHORS AT EACH END.
12. I-JOISTS AND RAFTERS SHALL HAVE FULL-HEIGHT SOLID BLOCKING AT THEIR BEARING POINTS. CONNECT EACH BLOCK TO TOP OF EXTERIOR WALLS WITH SIMPSON A34 CLIPS EACH JOIST OR RAFTER SHALL BE ANCHORED WITH SIMPSON H2.5 ANCHORS AT EACH END.
13. WOOD MEMBERS SHALL NOT BE CUT FOR PIPES, ETC. UNLESS SPECIFICALLY DETAILED
14. BIRDS MOUTHS AND/OR NOTCHING OF STRUCTURAL MEMBERS NOT SPECIFICALLY DETAILED ON THE STRUCTURAL PLANS IS NOT PERMITTED WITHOUT PRIOR APPROVAL.

COLUMNS & STUDS

15. ALL COLUMNS SHALL EXTEND DOWN THROUGH THE STRUCTURE TO THE FOUNDATION. COLUMNS SHALL BE BRACED AT EACH FLOOR LEVEL. COLUMNS SHALL BE AS WIDE AND DEEP AS THE MEMBER THEY SUPPORT IN ORDER TO PROVIDE FULL BEARING.
16. STAND ALONE POSTS SHALL BE DOUGLAS FIR-LARCH № 1OR EQUAL.
17. ALL EXTERIOR WALLS SHALL BE 2 x 6's AT 16" O.C.
18. ALL INTERIOR BEARING WALLS SHALL BE 2 x 6'S AT 16" O.C. UNLESS NOTED OTHER-WISE ON PLANS.

FLOOR, ROOF & WALL SHEATHING

19. ALL ROOF SHEATHING SHALL BE 5/8" APA EXP. 1 RATED SHEATHING OR EQUAL WITH 10d COMMON NAILS AT 6" O.C. PERIMETER, 6" O.C. PANEL EDGES AND AT 12" O.C. IN THE FIELD. PANEL EDGES ARE UNBLOCKED UNLESS NOTED OTHERWISE ON THE STRUCTURAL PLANS.
20. ALL FLOOR SHEATHING TO BE 3/4" THICK T&G SHEATHING GLUED AND NAILED WITH 10d COMMON NAILS OR EQUAL AT 6" O.C. PERIMETER, 6" O.C. PANEL EDGES AND AT 10" O.C. IN THE FIELD. PANEL EDGES ARE UNBLOCKED UNLESS NOTED OTHERWISE ON THE STRUCTURAL PLANS.
21. ALL EXTERIOR WALLS SHALL BE SHEATHED WITH 7/16" APA EXP. 1 RATED SHEATHING OR EQUAL WITH 8d COMMON NAILS AT 6" O.C. EDGES AND AT 12" O.C. IN THE FIELD - FLAT BLOCKED AT ALL PANEL EDGES, UNLESS NOTED OTHERWISE IN SHEAR WALL SCHEDULE.

STRUCTURAL CONNECTIONS

22. THE CONTRACTOR IS ULTIMATELY RESPONSIBLE TO PROVIDE ADEQUATE STRUCTURAL CONNECTIONS. CONNECTIONS MUST CARRY THE BEARING CAPACITY OF THE MEMBER AND ANY UPLIFT OR SEISMIC FORCES GENERATED IN THE MEMBER. SPECIAL CONSIDERATION SHALL BE GIVEN TO PREVENT CRUSHING OF THE MEMBER AT BEARING, SPLITTING AND/OR CRACKING OF THE WOOD, AND THE LIKE.
23. THE CONTRACTOR SHALL STRICTLY ADHERE TO THE CONNECTION DETAILS SPECIFIED ON THE PLANS OR INCLUDED WITH THE CONSTRUCTION DOCUMENTS. PRIOR APPROVAL IS REQUIRED FOR ANY DEVIATION FROM THE CONSTRUCTION DOCUMENTS.
24. SUBSTITUTION OF CONNECTIONS OTHER THAN THOSE SPECIFIED ON THE PLANS REQUIRES PRIOR APPROVAL. THE ENGINEER IS NOT RESPONSIBLE FOR CONNECTIONS NOT APPROVED PRIOR TO CONSTRUCTION OR INSTALLATION.
25. IF CONNECTION DETAILS, APPROVED BY THE ENGINEER, HAVE NOT BEEN PROVIDED IN THE CONSTRUCTION DOCUMENTS, IT IS THE CONTRACTOR'S RESPONSIBILITY TO SPECIFY AND PROVIDE ALL STRUCTURAL CONNECTIONS. IF OTHER THAN STANDARD CONNECTIONS ARE REQUIRED, SEE ENGINEER FOR ADDITIONAL ASSISTANCE.
26. USE SIMPSON CONNECTIONS OR EQUIVALENT. INSTALL PER MANUFACTURERS SPECIFICATIONS.
27. SHOP DRAWINGS FOR ALL FABRICATED STEEL CONNECTIONS SHALL BE SUBMITTED FOR REVIEW & APPROVAL PRIOR TO FABRICATION AND INSTALLATION. SEE GENERAL STEEL NOTES.
28. SEE GENERAL CONCRETE NOTES FOR SPECIFICATION OF ANCHOR BOLTS, ETC. IN NO CASE SHALL THE MUD SILL BE NOTCHED FOR THE INSTALLATION OF PLATE WASHERS, OR FOR ANY OTHER REASON.
29. ALL STRUCTURAL MEMBERS SHALL HAVE 1 3/4" MINIMUM BEARING.
30. FOR ADDITIONAL NAILING PATTERN, SEE SCHEDULES IN THE INTERNATIONAL BUILDING CODE (IBC).

STAIR FRAMING

31. STAIR STRINGERS SHALL BE 11 7/8" LVL's AT 16" O.C. (MAX.) w/ A MAXIMUM HORIZONTAL RUN OF 12'-0". USE 14" LVL UP TO 16'-0" RUN

GENERAL WOOD TRUSS NOTES

1. SEE GENERAL STRUCTURAL NOTES FOR ADDITIONAL REQUIREMENTS.
2. THE TRUSSES SHALL ALSO BE DESIGNED PER THE 2015 INTERNATIONAL BUILDING CODE, AND LOCAL ORDINANCES. THE TRUSS MANUFACTURER SHALL BE RESPONSIBLE FOR THE DESIGN AND FABRICATION OF THE PRE-ENGINEERED TRUSSES, PER THE DESIGN CRITERIA ABOVE. DESIGN MUST TAKE INTO ACCOUNT UNBALANCED SNOW LOADS, SNOW DRIFTING, INCREASED SNOW LOADS ON EAVES AND IN VALLEYS, IMPACT LOADS FROM FALLING SNOW AND ICE, ETC.
3. THE PROJECT ENGINEER, OR ENGINEER OF RECORD, IS NOT RESPONSIBLE FOR THE DESIGN OF THE PRE-ENGINEERED TRUSSES, NOR FOR THE INSTALLATION, ETC. OF THE TRUSSES. TRUSS DESIGN DRAWINGS FOR ALL WOOD TRUSSES SHALL BE SUBMITTED TO THE ENGINEER AND ARCHITECT FOR REVIEW AND APPROVAL PRIOR TO FABRICATION AND INSTALLATION.
4. THE TRUSS DESIGN DRAWINGS NEED TO INCLUDE ALL SPECIFIC REQUIREMENTS DESCRIBED IN INTERNATIONAL BUILDING CODE. AS REQUIRED IN ABOVE MENTIONED CODE A LICENSED DESIGN PROFESSIONAL LICENSED IN JURISDICTION WHERE PROJECT IS LOCATED WILL NEED TO STAMP TRUSS DESIGN DRAWINGS. THE DESIGN PROFESSIONAL CANNOT BE THE ENGINEER OF RECORD FOR THE PROJECT AND NEEDS EXPERIENCE DESIGNING PRESS PLATE WOOD TRUSSES.
5. ALL TRUSS TO TRUSS AND TRUSS TO STRUCTURAL BEAM CONNECTORS SHALL BE SPECIFIED BY THE TRUSS MANUFACTURER, AND CALLED OUT AT THE PROPER LOCATION ON TRUSS PLACEMENT DIAGRAM.
6. THE TRUSSES SHALL BE DESIGNED TO CARRY ANY ADDITIONAL LOADS DUE TO MECHANICAL UNITS, OVERHEAD DOORS, ROOF OVERBUILDS, ETC. SEE STRUCTURAL PLANS FOR ADDITIONAL REQUIREMENTS.
7. ALL MEMBERS SHALL BE DESIGNED FOR COMBINED STRESSES, BASED ON THE WORST LOADING CONDITION.
8. BOTTOM CHORDS OF TRUSSES, ACTING AS CEILING MEMBERS, MUST BE ABLE TO SUPPORT A 10 PSF LIVE LOAD PER IBC REQUIREMENTS.
9. EACH CHORD SECTION SHALL BE ENGAGED IN TWO PANEL POINTS BEFORE BEING SPLICED. SPLICE NEEDS TO OCCUR AT PANEL POINT, OR ZERO FORCE LOCATION.
10. PROVIDE 1/8" CAMBER FOR EACH 6 FEET OF TRUSS UNLESS OTHERWISE INDICATED.

TRUSS BRACING & BLOCKING

11. THE TRUSS MANUFACTURER SHALL SPECIFY PROPER BRACING OF COMPRESSION CHORD MEMBERS 6'-0" LONG (OR LONGER), AS WELL AS BRACING REQUIRED FOR TRUSS ERECTION, AND ANY OTHER BRACING.
12. THE TRUSS MANUFACTURER SHALL SPECIFY ALL REQUIRED TRUSS BLOCKING. TRUSS BLOCKING SHALL BE DESIGNED FOR LATERAL LOADINGS.

FABRICATION & INSTALLATION

13. ALL DIMENSIONS SHALL BE FIELD VERIFIED PRIOR TO FABRICATION.
14. FABRICATE TRUSSES FROM SHOP DRAWINGS REVIEWED AND APPROVED BY THE ENGINEER AND ARCHITECT.
15. FABRICATE TRUSSES IN JIGS WITH MEMBERS ACCURATELY CUT TO PROVIDE GOOD BEARING AT JOINTS. JOINTS SHALL BE ACCEPTABLE IF THE AVERAGE OPENING BETWEEN ENDS OF MEMBERS IMMEDIATELY AFTER FABRICATION IS LESS THAN 1/16", EXCEPT THAT TRUSS COMPRESSION CHORD JOINTS AT SPLICES AND RIDGES SHALL HAVE FULL CONTACT BETWEEN MEMBERS.
16. TRUSS FABRICATORS USING METAL PLATES SHALL HAVE PLANT INSPECTED FOUR TIMES PER YEAR BY AN INDEPENDENT TESTING LABORATORY IN ACCORDANCE WITH TPI REGULATIONS AND COPIES OF INSPECTIONS MADE AVAILABLE TO OWNER UPON REQUEST.
17. THE CONTRACTOR SHALL BE RESPONSIBLE FOR THE INSTALLATION OF THE TRUSSES PER THE TRUSS MANUFACTURER'S RECOMMENDATIONS AND SPECIFICATIONS. NO WEB OR CHORD MEMBERS SHALL BE MODIFIED IN THE FIELD.

METAL GUSSET PLATES

18. GUSSET PLATES SHALL BE SPECIFIED FOR GREATER OF EITHER THE MEMBER FORCES SHOWN ON DRAWINGS OR THE MEMBER FORCES DERIVED FROM STRUCTURAL ANALYSIS. PLUS OR MINUS 6%.
19. NO PANEL POINT SHALL HAVE MORE THAN ONE PLATE PER TRUSS SIDE.
20. PRESS PLATES INTO MEMBERS TO OBTAIN FULL PENETRATION WITHOUT CRUSHING OUT SURFACE OF WOOD. PLATE EMBEDMENT IS ACCEPTABLE IF OPENING BETWEEN PLATE AND WOOD SURFACE IS LESS THAN 1/32".
21. LUMBER DEFECTS AND PLATE MISPLACEMENT, IN COMBINATION, SHALL NOT REDUCE PLATE AREA OR NUMBER OF AFFECTIVE TEETH, PRONGS, OR NAILS BY MORE THAN 10%.
22. DO NOT APPLY METAL GUSSET PLATES AFTER SHOP FABRICATION.
23. ALL LOADS SPECIFICALLY CALLED OUT ON PLANS TO BE USED IN DESIGNING TRUSSES, ARE ALLOWABLE STRESS DESIGN (ASD) FORMAT w/ NO LOAD FACTORS INCLUDED.
24. WHEN TRUSSES ARE CALLED OUT AS LATERAL DRAG STRUTS. THE PHYSICAL TRUSS DESIGNATED AS SUCH NEEDS TO BE PHYSICALLY AND PERMANENTLY MARKED DIFFERENT FROM NORMAL TRUSSES.

DESIGN LOADS FOR ROOF TRUSSES:

TOP CHORD LIVE LOAD	= 192 PSF
TOP CHORD DEAD LOAD	= 10 PSF
BOT CHORD LIVE LOAD	= 0 PSF
BOT CHORD DEAD LOAD	= 5 PSF
TOTAL DESIGN LOAD	= 207 PSF

DEFLECTION CRITERIA ROOF TRUSSES:

TOTAL LOAD DEFLECTION = L/ 240

DESIGN CRITERIA

SNOW LOAD	192 PSF
SEISMIC DESIGN CATEGORY	D
RISK CATEGORY	11
3 SECOND GUST WIND SPEED	115 MPH
EXPOSURE	B
ALLOWABLE SOIL BEARING	1,500 PSF
SOIL SITE CLASS	D

DESIGN LOADS

ROOF LIVE LOAD	192 PSF
ROOF DEAD LOAD	15 PSF
FLOOR LIVE LOAD	40 PSF
FLOOR DEAD LOAD	50 PSF

DESIGN CODE

2015 INTERNATIONAL BUILDING CODE (IBC)

PLAN REVIEW ACCEPTANCE
FOR COMPLIANCE WITH THE APPLICABLE CONSTRUCTION CODES IDENTIFIED BELOW

☒ BUILDING	☒ STRUCTURAL
☒ MECHANICAL	☒ PLUMBING
☒ ELECTRICAL	☒ ENERGY
☐ ACCESSIBILITY	☐ FIRE

PLAN REVIEW ACCEPTANCE OF DOCUMENTS DOES NOT AUTHORIZE CONSTRUCTION TO PROCEED IN VIOLATION OF ANY FEDERAL, STATE, OR LOCAL REGULATIONS.
BY: MEM DATE: 08/24/17
WEST COAST CODE CONSULTANTS, INC.

DYNAMIC STRUCTURES
1887 NORTH 1120 WEST PROVO, UTAH 84604
PH: (801)356-1140 FAX: (801)356-0001

Structural Plans for:
POWDER MOUNTAIN CABIN 1000

PROFESSIONAL STRUCTURAL ENGINEER
NO. 190917
JAY D. ADAMS
STATE OF UTAH

DESIGNED BY:	J.D.A.
CHECKED BY:	J.D.A.
SCALE:	
DATE:	JULY 21, 2017
JOB No.	17-088

GENERAL STRUCTURAL NOTES

SHEET No.
S0.1

PLAN REVIEW-08/14/2017

SPECIAL INSPECTION SCHEDULE

SOILS (IBC 1705.6)

REQ'D	TASK	INSPECTION FREQUENCY CONT.	INSPECTION FREQUENCY PERIODIC	COMMENTS:
X	VERIFY ADEQUATE MATERIALS BELOW FOOTINGS		◊	PRIOR TO PLACEMENT OF CONCRETE.
X	EXCAVATION EXTEND TO PROPER DEPTH AND MATERIALS		◊	PRIOR TO PLACEMENT OF COMPACTED FILL OR CONCRETE.
X	CLASSIFICATION AND TESTING OF FILL MATERIALS		◊	CHECK CLASSIFICATION AND GRADATIONS AT EACH LIFT, BUT NOT LESS THAN ONCE FOR EACH 10,000 FT^2 OF SURFACE AREA.
X	VERIFY PROPER FILL MATERIALS, LIFT THICKNESSES AND IN-PLACE DENSITIES	◊		
X	VERIFY PROPERLY PREPARED SITE AND SUBGRADE		◊	PRIOR TO PLACEMENT OF CONCRETE.

CONCRETE CONSTRUCTION (IBC 1705.3)

REQ'D	TASK	INSPECTION FREQUENCY CONT.	INSPECTION FREQUENCY PERIODIC	COMMENTS:
X	REINFORCING STEEL PLACEMENT		◊	VERIFY SIZE, CLEARANCES, SPLICES AND PROPER TIES.
X	REINFORCING BAR WELDING a. WELDABILITY OF NON ASTM A706 BARS b. SINGLE PASS FILLED WELDS < 5/16" c. ALL OTHER WELDS	 ◊	◊ ◊ 	
X	CAST IN ANCHORS		◊	VERIFY MIX DESIGN MEETS STRENGTH AND EXPOSURE REQUIREMENTS LISTED ON APPROVED PLANS.
X	POST-INSTALLED ANCHORS a. ADHESIVE ANCHORS INSTALLED HORIZONTALLY OR UPWARDLY INCLINED RESISTING SUSTAINED TENSION LOADS b. POST INSTALLED ANCHORS NOT DEFINED IN a.	◊	 ◊	IN ACCORDANCE WITH APPROVED ICC-ES REPORT. PERIODIC INSPECTIONS ALLOWED IF STATED IN ES REPORT.
X	VERIFY REQUIRED DESIGN MIX		◊	VERIFY MIX DESIGN MEETS STRENGTH AND EXPOSURE REQUIREMENTS LISTED ON APPROVED PLANS.
X	SLUMP, AIR + TEMPERATURE TESTS. PREPARE STRENGTH TEST SAMPLES	◊		
X	CONCRETE PLACEMENT	◊		INCLUDES SAMPLING FOR AIR, SLUMP, STRENGTH AND TEMPERATURE TECHNIQUES.
X	CURING TEMPERATURE MAINTENANCE		◊	
	PRESTRESSED CONCRETE a. PRESTRESSING FORCES b. GROUTING OF BONDED TENDONDS	◊ ◊		
	ERECTION OF PRECAST MEMBERS		◊	
	POST-TENSIONED CONCRETE STRENGTH		◊	
X	INSPECT FORMWORK		◊	

COLD-FORMED STEEL CONSTRUCTION (IBC 1705.11.2 & 1705.12.3)

REQ'D	TASK	INSPECTION FREQUENCY CONT.	INSPECTION FREQUENCY PERIODIC	COMMENTS:
	COMPONENTS OF WIND AND SEISMIC-FORCE RESISTING SYSTEMS		◊	VERIFY PROPER SCREW ATTACHMENT, BOLTING AND ANCHORING OF SHEAR WALLS, BRACES AND HOLDOWNS HAVING A FASTENER SPACING ≤ 4" O.C.
	FIELD WELDING OF ELEMENTS OF MAIN LATERAL FORCE RESISTING SYSTEM.		◊	

OTHER THAN STRUCTURAL STEEL (IBC 1705.2.2)

REQ'D	TASK	INSPECTION FREQUENCY CONT.	INSPECTION FREQUENCY PERIODIC	COMMENTS:
	STEEL ROOF & FLOOR DECK:			
	MATERIAL VERIFICATION OF STEEL DECK		◊	IDENTIFICATION MARKINGS PER APPLICABLE ASTM STANDARD
	ROOF AND DECK WELDS		◊	VERIFY THAT WELDS CONFORM TO AWS D1.3.
	WELDING OF REINFORCING STEEL:			
	VERIFICATION OF WELDABILITY (EXCEPT A706 BAR)		◊	VERIFY MATERIAL IS ABLE TO CONFORM TO AWS D1.4.

INSTALLATION OF OPEN-WEB STEEL JOISTS AND GIRDERS (IBC 1705.2.3)

REQ'D	TASK	INSPECTION FREQUENCY CONT.	INSPECTION FREQUENCY PERIODIC	COMMENTS:
	END CONNECTIONS		◊	SJI 2207.1
	BRIDGING - HORIZONTAL OR DIAGONAL a. STANDARD BRIDGING b. NON-STANDARD BRIDGING		◊ ◊	SJI 2207.1

MASONRY CONSTRUCTION (IBC 1705.4)

REQ'D	TASK	INSPECTION FREQUENCY CONT.	INSPECTION FREQUENCY PERIODIC	COMMENTS:
	MINIMUM TESTING (TABLE 1.19.2, TMS - 402/ACI 530-11):			
	VERIFICATION OF SLUMP FLOW AND VISUAL STABILITY INDEX (VSI) FOR SELF-CONSOLIDATING GROUT.		◊	COMPRESSIVE STRENGTH TESTS PER ASTM C 1019 FOR SLUMP FLOW AND ASTM C 1611 FOR VSI.
	VERIFICATION OF F'_M		◊	DETERMINE COMPRESSIVE STRENGTH PER "UNIT STRENGTH" OR "PRISM TEST" AS SPECIFIED IN ARTICLE 1.4.B OF ACI 530.1 PRIOR TO CONSTRUCTION.
	PRIOR TO CONSTRUCTION (ARTICLE 1.15, TMS-602/ACI 530.1-11):			
	REVIEW MATERIAL CERTIFICATES, MIX DESIGNS, TEST RESULTS AND CONSTRUCTION PROCEDURES		◊	VERIFY MATERIALS CONFORM TO APPROVED CONSTRUCTION DOCUMENTS. MIX DESIGN, TEST RESULTS, MATERIAL CERTIFICATES, AND CONSTRUCTION PROCEDURES SHOULD BE SUBMITTED FOR REVIEW. MORTAR MIX DESIGNS SHALL CONFORM TO ASTM C 270 WHILE GROUT SHALL CONFORM TO ASTM C 476. MATERIAL CERTIFICATES SHALL BE PROVIDED FOR THE FOLLOWING: REINFORCEMENT; ANCHORS, TIES, FASTENERS, AND METAL ACCESSORIES; MASONRY UNITS; MORTAR AND GROUT MATERIALS. REVIEW COLD-WEATHER OR HOT-WEATHER CONSTRUCTION PROCEDURES.
	AS CONSTRUCTION BEGINS (TABLE 1.19.2, TMS-402/ACI 530-11):			
	PROPORTIONS OF SITE-PREPARED MORTAR		◊	VERIFY THAT MORTAR IS TYPE AND COLOR SPECIFIED ON APPROVED PLANS, IT CONFORMS TO ASTM C 270, AND IS MIXED PER ARTICLE 2.6.A OF ACI 530.1.
	CONSTRUCTION OF MORTAR JOINTS		◊	VERIFY MORTAR JOINTS MEET ARTICLE 3.3.B OF ACI 530.1.1
	GRADE AND SIZE OF PRE-STRESSING TENDONS AND ANCHORAGES		◊	VERIFY THAT PRE-STRESSING TENDONS CONFORM TO REQUIREMENTS OF ARTICLE 2.4B AND 2.4H OF ACI530.1
	LOCATION OF REINFORCEMENT, CONNECTORS AND ANCHORAGES.		◊	VERIFY REINFORCEMENT IS PLACED IN ACCORDANCE WITH ARTICLE 3.4 OF 530.1.
	PRE-STRESSING TECHNIQUE		◊	VERIFY PRE-STRESSING TECHNIQUE CONFORMS TO ARTICLE 3.6B OR ACI 530.1
	PROPERTIES OF THIN BED MORTAR FOR AAC MASONRY	◊	◊	VERIFY REINFORCEMENT IS PLACED IN ACCORDANCE WITH ARTICLE 3.4 OF 530.1.
	PRIOR TO GROUTING (TABLE 1.19.2, TMS-402/ACI 530-11):			
	GROUT SPACE		◊	VERIFY GROUT SPACE IS FREE OF MORTAR DROPPINGS, DEBRIS, LOOSE AGGREGATE, AND OTHER DELETERIOUS MATERIALS AND THAT CLEANOUTS ARE PROVIDED PER ARTICLE 3.2D AND 3.2F OF ACI 530.1
	GRADE, TYPE AND SIZE OF REINFORCEMENT, ANCHOR BOLTS AND ANCHORAGES.		◊	VERIFY REINFORCEMENT, JOINT REINFORCEMENT, ANCHOR BOLTS AND VENEER ANCHORS COMPLY WITH APPROVED PLANS AND SECTIONS 1.6 OF ACI 530.
	PLACEMENT OF REINFORCEMENT, CONNECTORS AND ANCHORAGES.		◊	VERIFY REINFORCEMENT, JOINT REINFORCEMENT, ANCHOR BOLTS AND VENEER ANCHORS ARE INSTALLED PER APPROVED PLANS AND ARTICLES 3.2.E, 3.4, AND 3.6.A OF ACI 530.1.
	PROPORTIONS OF SITE-PREPARED GROUT.		◊	VERIFY GROUT PROPORTIONS MEET ASTM C 476 AND A SLUMP BETWEEN 8-11 INCHES. SELF-CONSOLIDATED GROUT SHALL NOT BE PROPORTIONED ONSITE.
	CONSTRUCTION OF MORTAR JOINTS		◊	VERIFY MORTAR JOINTS PLACED IN ACCORDANCE WITH ARTICLE 3.3.B OF ACI 530.1.
	DURING CONSTRUCTION (TABLE 1.19.2, TMS-402/ACI 530-11):			
	SIZE AND LOCATION OF STRUCTURAL ELEMENTS		◊	VERIFY LOCATIONS OF STRUCTURAL ELEMENTS PER APPROVED PLANS AND CONFIRM TOLERANCES MEET ARTICLE 3.3.F OF ACI 530.1.
	TYPE, SIZE AND LOCATION OF ANCHORS, FRAMES, ETC.		◊	VERIFY CORRECT ANCHORAGES AND CONNECTIONS ARE PROVIDED PER APPROVED PLANS AND SECTIONS 1.16.4.3 AND 1.17.1 OF ACI 530.
	WELDING OF REINFORCEMENT	◊		VERIFY CONFORMANCE WITH SECTIONS 2.1.7.7.2, 3.3.3.4 (c) AND 8.3.3.4 (b) OF ACI 530
	APPLICATION AND MEASUREMENT OF PRE-STRESSING FORCE	◊		VERIFY CONFORMANCE WITH ARTICLE 3.6B OF ACI 530.1
	PLACEMENT OF GROUT	◊		
	PREPARATION, CONSTRUCTION AND PROTECTION OF MASONRY DURING COLD WEATHER (< 40°F) OR HOT WEATHER (> 90°F).		◊	VERIFY COLD-WEATHER CONSTRUCTION COMPLIES WITH ARTICLE 1.8.C OF ACI 530.1 AND HOT WEATHER CONSTRUCTION PER ARTICLE 1.8.D OF ACI 530.1.
	PLACEMENT OF GROUT AND PRE-STRESSING GROUT FOR BONDED TENDONS	◊		VERIFY COMPLIANCE WITH ARTICLE 3.5, 3.6C OF ACI 530.1
	OBSERVATION OF GROUT SPECIMENS, MORTAR SPECIMENS, AND / OR PRISMS.		◊	CONFIRM SPECIMENS/ PRISMS ARE PERFORMED AS REQUIRED BY ARTICLE 1.4 OF ACI 530.1.

WOOD CONSTRUCTION (IBC 1705.11.2)

REQ'D	TASK	INSPECTION FREQUENCY CONT.	INSPECTION FREQUENCY PERIODIC	COMMENTS:
X	COMPONENTS OF WIND AND SEISMIC-FORCE RESISTING SYSTEMS		◊	VERIFY PROPER SCREW ATTACHMENT, BOLTING AND ANCHORING OF SHEAR WALLS, BRACES AND HOLDOWNS HAVING A FASTENER SPACING ≤ 4" O.C.
	FIELD GLUING OF MAIN LATERAL FORCE RESISTING SYSTEM	◊		

STATEMENT OF SPECIAL INSPECTIONS

1. THE PROJECT OWNER SHALL EMPLOY ONE OR MORE SPECIAL INSPECTORS TO PROVIDE INSPECTIONS DURING CONSTRUCTION ON THE TYPES OF WORK LISTED BELOW. THE SPECIAL INSPECTOR SHALL BE A QUALIFIED PERSON WHO SHALL DEMONSTRATE COMPETENCE, TO THE SATISFACTION OF THE BUILDING OFFICIAL, FOR INSPECTION OF THE PARTICULAR TYPE OF CONSTRUCTION OR OPERATION REQUIRING SPECIAL INSPECTION. THESE INSPECTIONS ARE IN ADDITION TO THE INSPECTIONS REQUIRED BY THE BUILDING DEPARTMENT OF THE LOCAL JURISDICTION.

2. SPECIAL INSPECTORS SHALL KEEP RECORDS OF INSPECTIONS. THE SPECIAL INSPECTOR SHALL FURNISH INSPECTION REPORTS TO THE BUILDING OFFICIAL AND TO THE REGISTERED DESIGN PROFESSIONAL IN RESPONSIBLE CHARGE. REPORTS SHALL INDICATE THAT WORK INSPECTED WAS DONE IN CONFORMANCE WITH APPROVED CONSTRUCTION DOCUMENTS. DISCREPANCIES SHALL BE BROUGHT TO THE IMMEDIATE ATTENTION OF THE CONTRACTOR FOR CORRECTION. IF THE DISCREPANCIES ARE NOT CORRECTED, THE DISCREPANCIES SHALE BE BROUGHT TO THE ATTENTION OF THE BUILDING OFFICIAL AND TO THE REGISTERED DESIGN PROFESSIONAL IN RESPONSIBLE CHARGE PRIOR TO THE COMPLETION OF THAT A PHASE OF THE WORK. A FINAL REPORT DOCUMENTING REQUIRED SPECIAL INSPECTIONS AND CORRECTION OF ANY DISCREPANCIES NOTED IN THE INSPECTIONS SHALL BE SUBMITTED AT A POINT IN TIME AGREED UPON BY THE PERMIT APPLICANT AND THE BUILDING OFFICIAL PRIOR TO THE START OF WORK.

3. SPECIAL INSPECTIONS FOR EACH TASK SHALL BE CARRIED OUT IN COMPLIANCE WITH REQUIREMENTS PER THE CURRENT IBC AND OTHER MATERIAL STANDARDS.

FABRICATION SHOP REQUIREMENTS

4. WHERE FABRICATION OF STRUCTURAL LOAD BEARING MEMBERS AND ASSEMBLIES IS BEING PERFORMED ON THE PREMISES OF A FABRICATORS SHOP, SPECIAL INSPECTIONS REQUIRED BELOW SHALL BE PROVIDED IN THE SHOP DURING THE FABRICATION PROCESS. THIS REQUIREMENT MAY BE EXCEPTED IF THE WORK IS DONE ON THE PREMISES OF A FABRICATOR REGISTERED AND APPROVED TO PERFORM SUCH WORK WITHOUT SPECIAL INSPECTION. A CERTIFICATE SHALL BE REQUIRED TO VERIFY SUCH APPROVAL. AT COMPLETION OF THE FABRICATION, THE APPROVED FABRICATOR SHALL SUBMIT A CERTIFICATE OF COMPLIANCE TO THE BUILDING OFFICIAL STATING THAT THE WORK WAS PERFORMED IN ACCORDANCE WITH THE APPROVED CONSTRUCTION DRAWINGS.

PLAN REVIEW ACCEPTANCE
FOR COMPLIANCE WITH THE APPLICABLE CONSTRUCTION CODES IDENTIFIED BELOW.
☒ BUILDING ☒ STRUCTURAL
☒ MECHANICAL ☒ PLUMBING
☒ ELECTRICAL ☒ ENERGY
☐ ACCESSIBILITY ☐ FIRE
PLAN REVIEW ACCEPTANCE OF DOCUMENTS DOES NOT AUTHORIZE CONSTRUCTION TO PROCEED IN VIOLATION OF ANY FEDERAL, STATE, OR LOCAL REGULATIONS.
BY MEM DATE 08/24/17
WEST COAST CODE CONSULTANTS, INC.

DYNAMIC STRUCTURES
1887 NORTH 1120 WEST PROVO, UTAH 84604
PH: (801)356-1140 FAX: (801)356-0001

Structural Plans for:
POWDER MOUNTAIN CABIN 1000

PROFESSIONAL STRUCTURAL ENGINEER
NO. 190917
JAY D. ADAMS
STATE OF UTAH
8/11/17

DESIGNED BY:	J.D.A.
CHECKED BY:	J.D.A.
SCALE:	
DATE:	JULY 21, 2017
JOB No.	17-088

SPECIAL INSPECTIONS

SHEET No.
S0.2

PLAN REVIEW-08/14/2017

STRUCTURAL STEEL CONSTRUCTION (IBC 1705.2, 1705.11, 1705.12)

REQ'D	TASK	INSPECTION TYPE Q.C.	INSPECTION TYPE Q.A.	COMMENTS:
	PRIOR TO WELDING (TABLE N5.4-1, AISC 360-10):			
X	VERIFY WELDING PROCEDURES	P	P	
X	MANUFACTURER CERTIFICATIONS	P	P	
X	MATERIAL IDENTIFICATION	O	O	VERIFY TYPE AND GRADE OF MATERIAL.
X	WELDER IDENTIFICATION	O	O	VERIFY THERE IS A SYSTEM IN PLACE TO IDENTIFY THE WELDER WHO HAS WELDED A JOINT OR MEMBER.
	FIT-UP GROOVE WELDS	O	O	VERIFY JOINT PREPARATION, DIMENSIONS, CLEANLINESS, TACKING AND BACKING.
	ACCESS HOLES	O	O	VERIFY CONFIGURATION AND FINISH.
	FIT-UP FILLET WELDS	O	O	VERIFY ALIGNMENT, GAPS AT ROOT, CLEANLINESS OF STEEL SURFACES, TACK WELD QUALITY AND LOCATION.
X	CHECK WELDING EQUIPMENT	O	O	
	DURING WELDING (TABLE N5.4-2, AISC 360-10):			
X	USE OF QUALIFIED WELDERS	O	O	VERIFY THAT WELDERS ARE APPROPRIATELY QUALIFIED.
X	CONTROL AND HANDLING OF WELDING CONSUMABLES	O	O	VERIFY PACKAGING AND EXPOSURE CONTROL.
X	CRACKED TACK WELDS	O	O	VERIFY WELDING IS NOT OVER A CRACKED TACK WELD.
X	ENVIRONMENTAL CONDITIONS	O	O	VERIFY WIND SPEED IS WITHIN LIMITS AS WELL AS PRECIPITATION AND TEMPERATURE.
X	WPS FOLLOWED	O	O	VERIFY ITEMS SUCH AS WELDING EQUIPMENT SETTINGS, TRAVEL SPEED, WELDING MATERIALS, SHIELDING GAS TYPE/FLOW RATE, PREHEAT APPLIED, INTERPASS TEMPERATURE MAINTAINED, AND PROPER POSTITION.
X	WELDING TECHNIQUES	O	O	VERIFY INTERPASS AND FINAL CLEANING; EACH PASS IS WITHIN PROFILE LIMITATIONS, AND QUALITY OF EACH PASS.
	AFTER WELDING (TABLE N5.4-3, AISC 360-10):			
X	WELDS CLEANED	O	O	VERIFY THAT WELDS HAVE BEEN PROPERLY CLEANED.
X	SIZE, LENGTH AND LOCATION OF WELDS	P	P	
X	WELDS MEET VISUAL ACCEPTANCE CRITERIA	P	P	
	ARC STRIKES	P	P	
	PRIOR TO BOLTING (TABLE N5.6-1 AISC 360-10):			
X	MANUFACTURERS CERTIFICATIONS FOR FASTENERS	O	P	
X	FASTENERS MARKED w/ ASTM REQUIREMENTS	O	O	
X	PROPER FASTENERS SELECTED FOR DETAIL	O	O	
X	PROPER PROCEDURE FOR DETAIL	O	O	
X	CONNECTING ELEMENTS	O	O	
X	PRE-INSTALLATION VERIFICATION TESTING	P	O	
X	PROPER STORAGE OF FASTENERS	O	O	
	DURING BOLTING (TABLE N5.6-2 AISC 360-10):			
X	FASTENER ASSEMBLIES	O	O	
X	JOINTS SNUG TIGHT PRIOR TO PRETENSIONING	O	O	
X	PROPER WRENCH USAGE	O	O	
X	FASTENERS PRETENSIONED	O	O	
	AFTER BOLTING (TABLE N5.6-3, AISC 360-10):			
X	STRUCTURAL STEEL DETAILS	P	P	

O- OBSERVE THESE ITEMS ON A RANDOM BASIS.

P- PERFORM THESE TASKS FOR EACH WELDED / BOLTED JOINT OR MEMBER (AISC 360-10 N5.4)

PLAN REVIEW ACCEPTANCE

FOR COMPLIANCE WITH THE APPLICABLE CONSTRUCTION CODES IDENTIFIED BELOW.

- [X] BUILDING
- [X] MECHANICAL
- [X] ELECTRICAL
- [ ] ACCESSIBILITY
- [X] STRUCTURAL
- [X] PLUMBING
- [X] ENERGY
- [ ] FIRE

PLAN REVIEW ACCEPTANCE OF DOCUMENTS DOES NOT AUTHORIZE CONSTRUCTION TO PROCEED IN VIOLATION OF ANY FEDERAL, STATE, OR LOCAL REGULATIONS.

BY: MEM DATE: 08/24/17

WEST COAST CODE CONSULTANTS, INC.

DYNAMIC STRUCTURES
1887 NORTH 1120 WEST PROVO, UTAH 84604
PH: (801)356-1140 FAX: (801)356-0001

Structural Plans for:

POWDER MOUNTAIN CABIN 1000

PROFESSIONAL STRUCTURAL ENGINEER
NO. 190917
JAY D. ADAMS
STATE OF UTAH

DESIGNED BY:	J.D.A.
CHECKED BY:	J.D.A.
SCALE:	
DATE:	JULY 21, 2017
JOB No.	17-088

SPECIAL INSPECTIONS

SHEET No.

S0.3

1 PLAN REVIEW-08/14/2017

Horizon Village Finished Grade at Center of Pier - 2017.07.13

Unit Type	Pier Number	Finished Grade at Pier	Top of Pier Elevation	Bottom of Footing Elevation
1500SF	2A	8760.38	8760.50	8753.38
	2B	8758.30	8760.50	8751.30
	2C	8765.44	8766.00	8758.44
	2D	8763.22	8766.00	8756.22
	2E	8769.40	8770.00	8762.40
	2F	8768.27	8770.00	8761.27
1500SF	3A	8727.42	8728.00	8720.42
	3B	8727.58	8728.00	8720.58
	3C	8732.46	8733.00	8725.46
	3D	8732.07	8733.00	8725.07
	3E	8734.16	8734.50	8727.16
	3F	8734.15	8734.50	8727.15
2500SF	4A	8744.49	8745.00	8737.49
	4B	8744.42	8745.00	8737.42
	4C	8743.88	8745.00	8736.88
	4D	8743.81	8744.00	8736.81
	4E	8743.05	8744.00	8736.05
	4F	8750.23	8750.50	8743.23
	4G	8750.23	8750.50	8743.23
	4H	8750.23	8750.50	8743.23
	4I	8750.23	8750.50	8743.23
	4J	8750.23	8750.50	8743.23
2500SF	5A	8810.67	8811.00	8803.67
	5B	8809.82	8811.00	8802.82
	5C	8809.20	8811.00	8802.20
	5D	8807.71	8808.00	8800.71
	5E	8806.26	8806.50	8799.26
	5F	8816.22	8816.50	8809.22
	5G	8816.19	8816.50	8809.19
	5H	8816.13	8816.50	8809.13
	5I	8816.07	8816.50	8809.07
	5J	8814.80	8815.00	8807.80
1500plusSF	6A	8776.88	8777.00	8769.88
	6B	8775.53	8776.00	8768.53
	6C	8772.86	8773.00	8765.86
	6D	8769.93	8770.50	8762.93
	6E	8782.72	8783.00	8775.72
	6F	8782.62	8783.00	8775.62
	6G	8779.71	8780.00	8772.71
	6H	8776.66	8777.00	8769.66
1500SF	7A	8792.86	8793.25	8785.86
	7B	8790.27	8791.00	8783.27
	7C	8797.24	8797.75	8790.24
	7D	8795.19	8795.50	8788.19
	7E	8800.45	8801.00	8793.45
	7F	8799.47	8800.00	8792.47
2500SF	8A	8778.16	8778.75	8771.16
	8B	8777.50	8777.75	8770.50
	8C	8777.42	8777.75	8770.42
	8D	8777.01	8777.75	8770.01
	8E	8775.99	8776.50	8768.99
	8F	8785.10	8785.50	8778.10
	8G	8785.25	8785.50	8778.25
	8H	8785.24	8785.50	8778.24
	8I	8784.88	8785.50	8777.88
	8J	8784.10	8784.50	8777.10
1500plusSF	9A	8767.24	8767.50	8760.24
	9B	8766.41	8767.50	8759.41
	9C	8764.06	8764.50	8757.06
	9D	8762.41	8763.00	8755.41
	9E	8773.00	8773.50	8766.00
	9F	8772.18	8772.75	8765.18
	9G	8770.40	8771.00	8763.40
	9H	8767.71	8768.00	8760.71
1500plusSF	10A	8748.17	8748.75	8741.17
	10B	8746.78	8747.00	8739.78
	10C	8745.71	8746.00	8738.71
	10D	8745.41	8746.00	8738.41
	10E	8754.64	8755.00	8747.64
	10F	8752.94	8753.50	8745.94
	10G	8751.18	8751.50	8744.18
	10H	8750.67	8751.50	8743.67
1000SF	11A	8706.47	8707.00	8699.47
	11B	8706.12	8707.00	8699.12
	11C	8709.49	8710.00	8702.49
	11D	8709.45	8710.00	8702.45
	11E	8711.84	8712.25	8704.84
	11F	8711.71	8712.25	8704.71
1500plusSF	12A	8800.77	8801.00	8793.77
	12B	8797.93	8798.25	8790.93
	12C	8795.36	8796.00	8788.36
	12D	8793.20	8793.75	8786.20
	12E	8805.59	8806.00	8798.59
	12F	8803.88	8804.25	8796.88
	12G	8801.65	8802.00	8794.65
	12H	8799.21	8799.75	8792.21
1000SF	13A	8779.35	8780.00	8772.35
	13B	8779.70	8780.00	8772.70
	13C	8784.01	8784.50	8777.01
	13D	8783.44	8784.50	8776.44
	13E	8788.19	8788.50	8781.19
	13F	8783.19	8783.75	8776.19
1500SF	14A	8783.38	8784.00	8776.38
	14B	8780.27	8780.75	8773.27
	14C	8787.42	8788.00	8780.42
	14D	8783.88	8784.25	8776.88
	14E	8790.59	8791.00	8783.59
	14F	8787.93	8788.50	8780.93
1500SF	15A	8759.93	8760.50	8752.93
	15B	8758.21	8758.75	8751.21
	15C	8763.93	8764.50	8756.93
	15D	8761.11	8761.50	8754.11
	15E	8767.87	8768.00	8760.87
	15F	8764.89	8765.25	8757.89
1000SF	16A	8735.82	8736.50	8728.82
	16B	8735.93	8736.50	8728.93
	16C	8738.81	8739.50	8731.81
	16D	8739.00	8739.50	8732.00
	16E	8742.08	8742.50	8735.08
	16F	8742.23	8742.50	8735.23

1500plusSF	17A	8792.79	8793.25	8785.79
	17B	8792.37	8793.25	8785.37
	17C	8791.22	8792.00	8784.22
	17D	8791.59	8792.00	8784.59
	17E	8799.78	8801.00	8792.78
	17F	8800.38	8801.00	8793.38
	17G	8799.28	8799.75	8792.28
	17H	8799.26	8799.75	8792.26
1500SF	18A	8821.10	8821.50	8814.10
	18B	8816.37	8817.00	8809.37
	18C	8824.41	8825.00	8817.41
	18D	8820.85	8821.25	8813.85
	18E	8826.58	8827.00	8819.58
	18F	8825.48	8826.00	8818.48
1000SF	19A	8801.37	8802.00	8794.37
	19B	8800.49	8801.00	8793.49
	19C	8808.22	8808.75	8801.22
	19D	8807.69	8808.75	8800.69
	19E	8814.76	8815.50	8807.76
	19F	8814.40	8815.50	8807.40
1500plusSF	20A	8725.56	8726.00	8718.56
	20B	8725.58	8726.00	8718.58
	20C	8725.24	8726.00	8718.24
	20D	8724.88	8726.00	8717.88
	20E	8728.40	8728.75	8721.40
	20F	8728.27	8728.75	8721.27
	20G	8727.97	8728.75	8720.97
	20H	8727.73	8728.75	8720.73
1000SF	21A	8720.19	8720.75	8713.19
	21B	8720.17	8720.75	8713.17
	21C	8721.60	8722.00	8714.60
	21D	8721.36	8722.00	8714.36
	21E	8723.40	8723.75	8716.40
	21F	8723.05	8723.75	8716.05
1500plusSF	22A	8727.00	8727.50	8720.00
	22B	8727.07	8727.50	8720.07
	22C	8726.42	8727.00	8719.42
	22D	8724.48	8725.50	8717.48
	22E	8724.48	8730.00	8717.48
	22F	8729.50	8730.00	8722.50
	22G	8729.00	8730.00	8722.00
	22H	8727.94	8728.50	8720.94
1500plusSF	23A	8714.65	8715.00	8707.65
	23B	8714.46	8715.00	8707.46
	23C	8714.32	8715.00	8707.32
	23D	8714.16	8715.00	8707.16
	23E	8717.72	8718.00	8710.72
	23F	8716.96	8717.25	8709.96
	23G	8716.29	8717.25	8709.29
	23H	8715.40	8716.00	8708.40
2500SF	24A	8699.52	8700.00	8692.52
	24B	8698.44	8699.00	8691.44
	24C	8697.97	8699.00	8690.97
	24D	8698.02	8699.00	8691.02
	24E	8697.70	8698.50	8690.70
	24F	8704.68	8704.75	8697.68
	24G	8703.89	8704.75	8696.89
	24H	8704.20	8704.75	8697.20
	24I	8704.13	8704.75	8697.13
	24J	8703.20	8704.00	8696.20
1500SF	25A	8717.42	8718.00	8710.42
	25B	8717.41	8718.00	8710.41
	25C	8719.32	8720.00	8712.32
	25D	8719.02	8720.00	8712.02
	25E	8722.75	8723.00	8715.75
	25F	8722.01	8723.00	8715.01
1000SF	26A	8687.97	8688.25	8680.97
	26B	8687.27	8688.25	8680.27
	26C	8691.80	8692.25	8684.80
	26D	8691.19	8692.25	8684.19
	26E	8694.67	8695.00	8687.67
	26F	8694.27	8695.00	8687.27
1000SF	27A	8708.73	8709.25	8701.73
	27B	8708.19	8709.25	8701.19
	27C	8710.75	8711.25	8703.75
	27D	8709.91	8710.50	8702.91
	27E	8713.16	8713.75	8706.16
	27F	8711.71	8712.25	8704.71
1500plusSF	28A	8750.80	8751.25	8743.80
	28B	8750.63	8751.25	8743.63
	28C	8750.73	8751.25	8743.73
	28D	8750.37	8751.25	8743.37
	28E	8756.11	8757.00	8749.11
	28F	8756.21	8757.00	8749.21
	28G	8756.81	8757.00	8749.81
	28H	8756.71	8757.00	8749.71
1000SF	29A	8743.44	8744.00	8736.44
	29B	8744.43	8745.00	8737.43
	29C	8746.72	8747.75	8739.72
	29D	8747.38	8747.75	8740.38
	29E	8750.93	8751.50	8743.93
	29F	8750.96	8751.50	8743.96
1500SF	30A	8731.96	8732.50	8724.96
	30B	8731.82	8732.50	8724.82
	30C	8734.89	8735.50	8727.89
	30D	8735.08	8735.50	8728.08
	30E	8738.23	8738.75	8731.23
	30F	8738.20	8738.75	8731.20
2500SF	31A	8740.17	8740.75	8733.17
	31B	8740.32	8740.75	8733.32
	31C	8741.13	8741.75	8734.13
	31D	8741.26	8741.75	8734.26
	31E	8741.71	8742.25	8734.71
	31F	8745.58	8746.50	8738.58
	31G	8745.79	8746.50	8738.79
	31H	8746.17	8746.50	8739.17
	31I	8746.60	8747.25	8739.60
	31J	8747.38	8747.75	8740.38

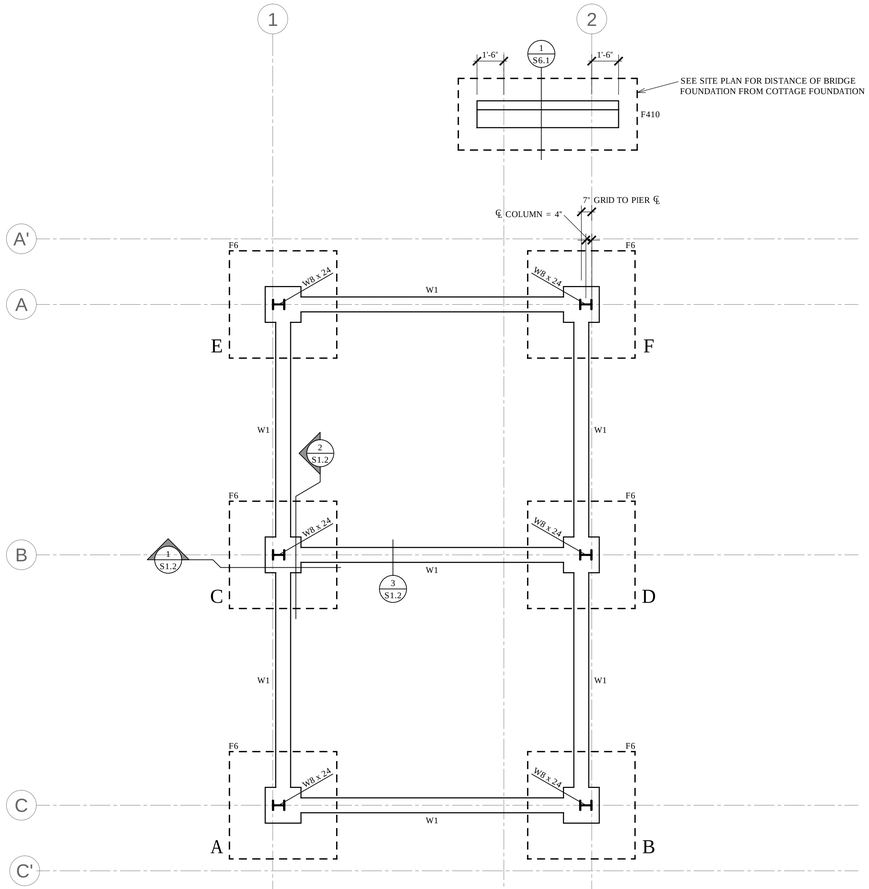

FOUNDATION SCHEDULE

MARK	WALL WIDTH	WALL HEIGHT	VERT. REINFORCING SIZE	VERT. REINFORCING SPACING	HORIZ. REINFORCING SIZE	HORIZ. REINFORCING SPACING
*W1	10"	VARIES	#5	12" O.C.	#5	12" O.C.

PLACE (2) # 4 HORIZ. BARS AT TOP & BOTTOM OF WALL CONTINUOUS, TYPICAL.
RECESS TOP OF WALL AT OPENINGS & POUR SLAB THROUGH, SEE DETAILS

* THIS WALL REQUIRES (2) MATS OF REINFORCING (1) MAT 2" OFF EA. FACE AS SPECIFIED ABOVE

FOOTING SCHEDULE

MARK	WIDTH	LENGTH	DEPTH	REINFORCING CROSS-WISE No.	SIZE	LENGTH	SPACING	REINFORCING LENGTH-WISE No.	SIZE	LENGTH	SPACING
F6	6'-0"	6'-0"	14"	(7)	#5	5'-6"	EQUAL	(7)	#5	5'-6"	EQUAL
F410	4'-0"	10'-0"	12"	(11)	#5	3'-6"	EQUAL	(5)	#5	9'-6"	EQUAL

PLAN REVIEW ACCEPTANCE

FOR COMPLIANCE WITH THE APPLICABLE CONSTRUCTION CODES IDENTIFIED BELOW.

- [X] BUILDING
- [X] MECHANICAL
- [X] ELECTRICAL
- [ ] ACCESSIBILITY
- [X] STRUCTURAL
- [X] PLUMBING
- [X] ENERGY
- [ ] FIRE

PLAN REVIEW ACCEPTANCE OF DOCUMENTS DOES NOT AUTHORIZE CONSTRUCTION TO PROCEED IN VIOLATION OF ANY FEDERAL, STATE, OR LOCAL REGULATIONS.

BY: MEM DATE: 08/24/17

WEST COAST CODE CONSULTANTS, INC.

DYNAMIC STRUCTURES
1887 NORTH 1120 WEST PROVO, UTAH 84604
PH: (801)356-1140 FAX: (801)356-0001

Structural Plans for:

POWDER MOUNTAIN CABIN 1000

PROFESSIONAL STRUCTURAL ENGINEER
NO. 190917
JAY D. ADAMS
STATE OF UTAH

DESIGNED BY:	J.D.A.
CHECKED BY:	J.D.A.
SCALE:	1/4" = 1'-0"
DATE:	JULY 21, 2017
JOB No.	17-088

FOUNDATION PLAN

SHEET No.

S1.1

PLAN REVIEW-08/14/2017

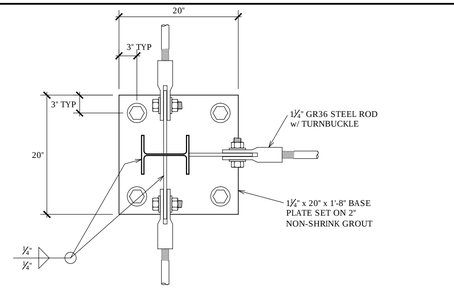

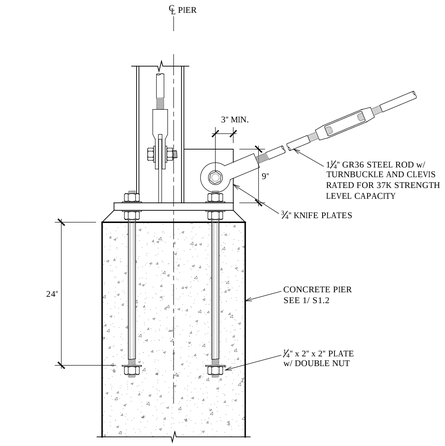

5 S1.2 CONSTRUCTION DETAIL
NO SCALE

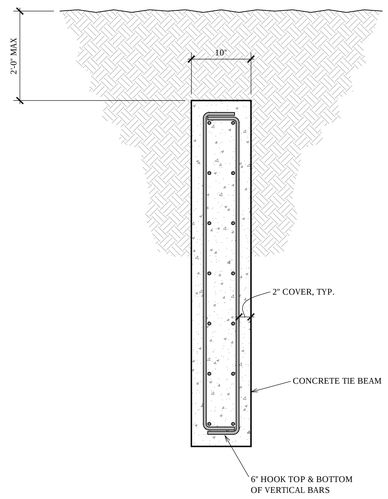

3 S1.2 CONSTRUCTION DETAIL
NO SCALE

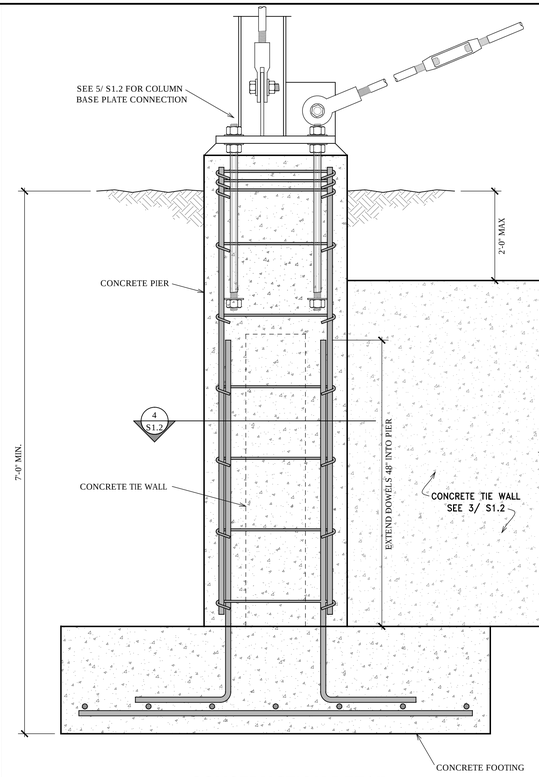

1 S1.2 CONSTRUCTION DETAIL
NO SCALE

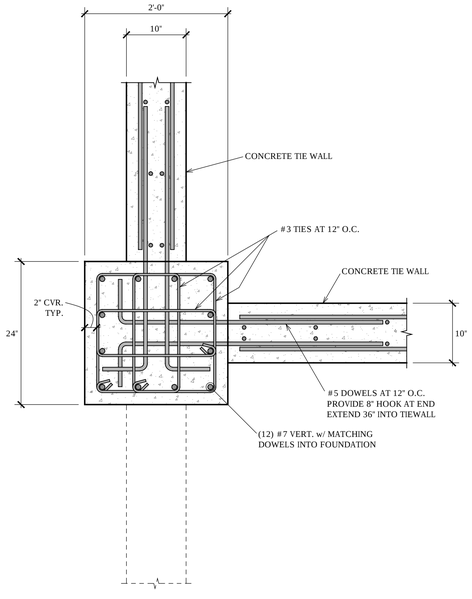

4 S1.2 CONSTRUCTION DETAIL
NO SCALE

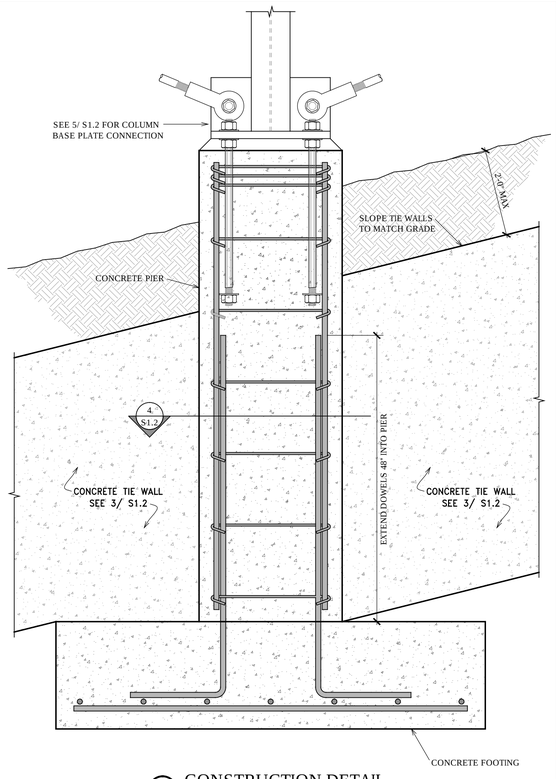

2 S1.2 CONSTRUCTION DETAIL
NO SCALE

PLAN REVIEW ACCEPTANCE

FOR COMPLIANCE WITH THE APPLICABLE CONSTRUCTION CODES IDENTIFIED BELOW.

☒ BUILDING	☒ STRUCTURAL
☒ MECHANICAL	☒ PLUMBING
☒ ELECTRICAL	☒ ENERGY
☐ ACCESSIBILITY	☐ FIRE

PLAN REVIEW ACCEPTANCE OF DOCUMENTS DOES NOT AUTHORIZE CONSTRUCTION TO PROCEED IN VIOLATION OF ANY FEDERAL, STATE, OR LOCAL REGULATIONS.

BY: MEM DATE: 08/24/17

WEST COAST CODE CONSULTANTS, INC.

DYNAMIC STRUCTURES
1887 NORTH 1120 WEST PROVO, UTAH 84604
PH: (801)356-1140 FAX: (801)356-0001

Structural Plans for:

POWDER MOUNTAIN CABIN 1000

PROFESSIONAL STRUCTURAL ENGINEER
NO. 190917
JAY D. ADAMS
STATE OF UTAH

DESIGNED BY:	J.D.A.
CHECKED BY:	J.D.A.
SCALE:	AS SHOWN
DATE:	JULY 21, 2017
JOB No.	17-088

CONSTRUCTION DETAILS

SHEET No.

S1.2

1 PLAN REVIEW-08/14/2017

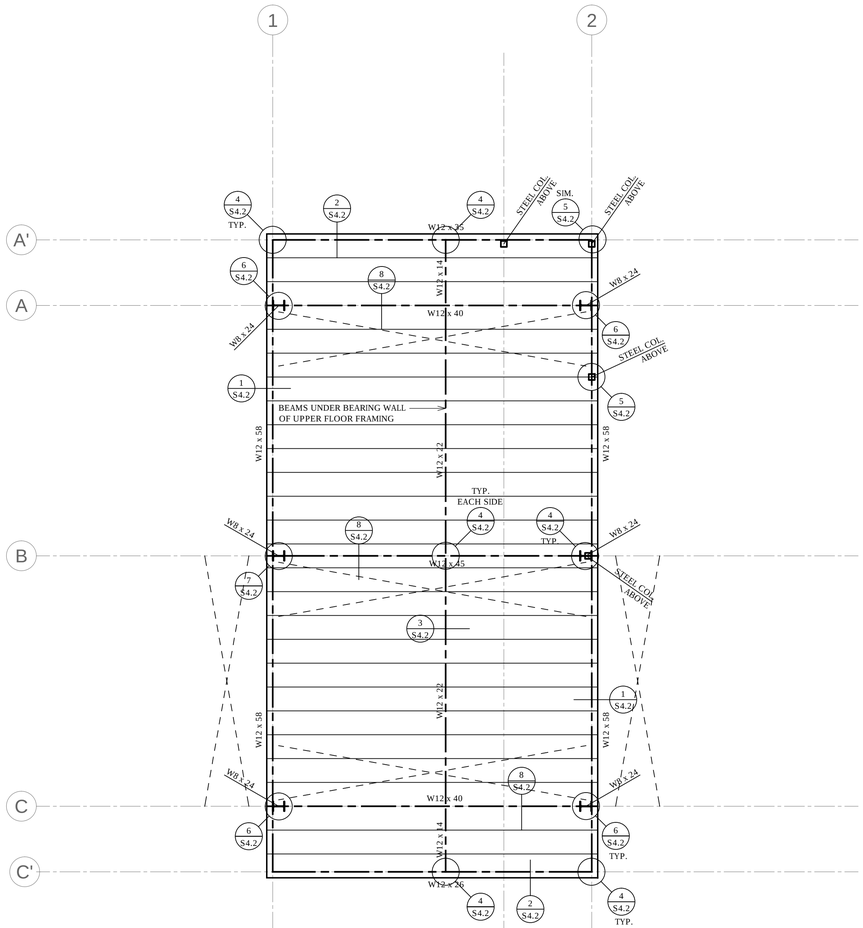

MAIN FLOOR FRAMING PLAN

SCALE: 1/4" = 1'-0"

FLOOR FRAMING NOTES

1. FRAME FLOOR w/ 9½" TJI/210 AT 16" O.C.
   PROVIDE 3" CONCRETE TOPPING ON FLOOR WHERE INDICATED IN ARCH. PLANS
2. SEE FRAMING NOTES ON S0.1 FOR FLOOR SHEATHING SPECIFICATIONS
3. REPRESENTS 1½" ROD CROSS BRACING BETWEEN FOUNDATION AND MAIN LEVEL FRAMING

PLAN REVIEW ACCEPTANCE
FOR COMPLIANCE WITH THE APPLICABLE CONSTRUCTION CODES IDENTIFIED BELOW.
☒ BUILDING ☒ STRUCTURAL
☒ MECHANICAL ☒ PLUMBING
☒ ELECTRICAL ☒ ENERGY
☐ ACCESSIBILITY ☐ FIRE
PLAN REVIEW ACCEPTANCE OF DOCUMENTS DOES NOT AUTHORIZE CONSTRUCTION TO PROCEED IN VIOLATION OF ANY FEDERAL, STATE, OR LOCAL REGULATIONS.
BY: MEM DATE: 08/24/17
WEST COAST CODE CONSULTANTS, INC.

DYNAMIC STRUCTURES
1887 NORTH 1120 WEST PROVO, UTAH 84604
PH: (801) 356-1140 FAX: (801) 356-0001

Structural Plans for:
POWDER MOUNTAIN CABIN 1000

PROFESSIONAL STRUCTURAL ENGINEER
NO. 190917
JAY D. ADAMS
STATE OF UTAH

DESIGNED BY:	J.D.A.
CHECKED BY:	J.D.A.
SCALE:	1/4" = 1'-0"
DATE:	JULY 21, 2017
JOB No.	17-088

MAIN FLOOR FRAMING PLAN

SHEET No.
S2.1

PLAN REVIEW-08/14/2017

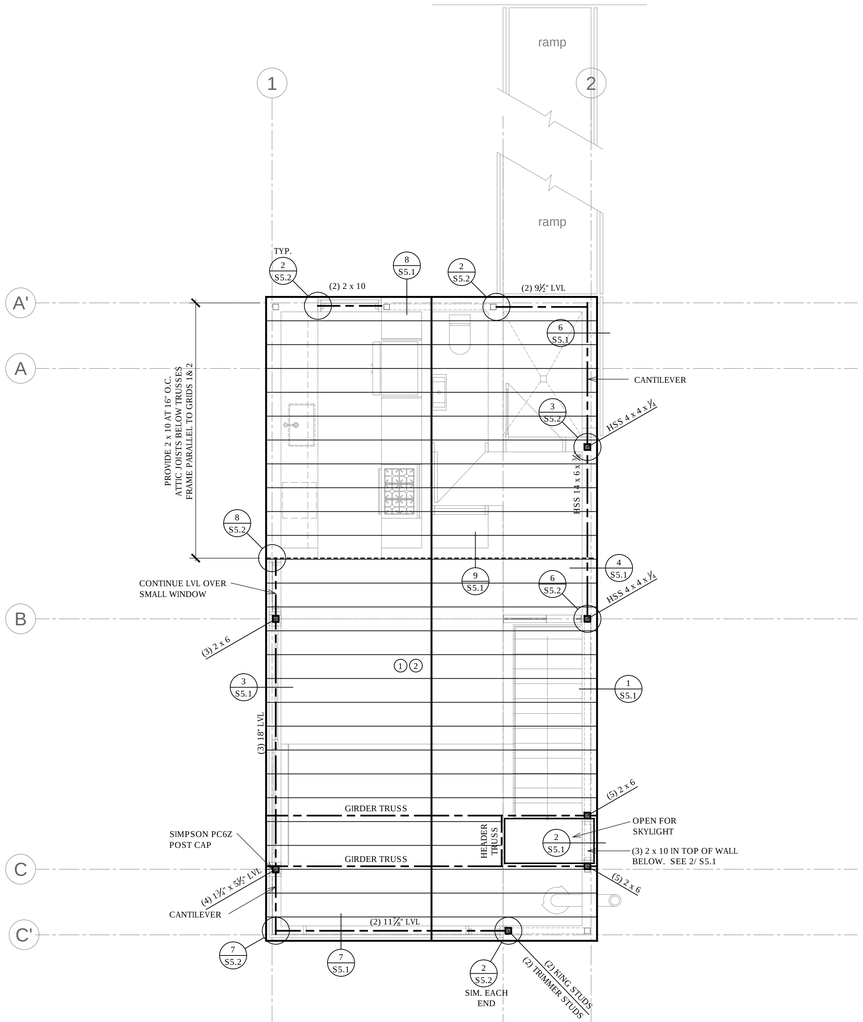

ROOF FRAMING PLAN

SCALE: 1/4" = 1'-0"

DEAD LOAD= 15 PSF
SNOW LOAD =192 PSF

ROOF FRAMING NOTES

1. FRAME ROOF w/ PRE-ENGINEERED ROOF TRUSSES AT 16" O.C.
2. SEE FRAMING NOTES ON S0.1 FOR ROOF SHEATHING SPECIFICATIONS
3. FRAME EXTERIOR WALLS w/ 2 x 6 AT 16" O.C.

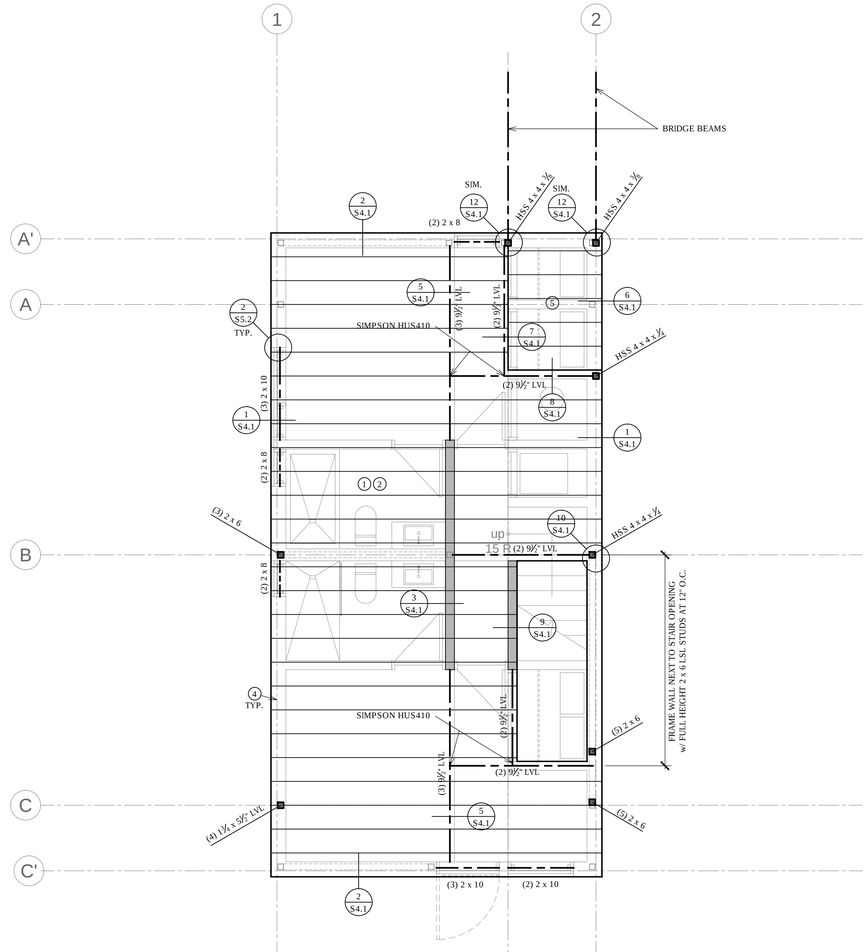

UPPER FLOOR FRAMING PLAN

SCALE: 1/4" = 1'-0"

DEAD LOAD= 50 PSF
LIVE LOAD =40 PSF

FLOOR FRAMING NOTES

1. FRAME FLOOR w/ 9½" TJI/210 AT 16" O.C.
   PROVIDE 3" CONCRETE TOPPING ON FLOOR WHERE INDICATED IN ARCH. PLANS
2. SEE FRAMING NOTES ON S0.1 FOR FLOOR SHEATHING SPECIFICATIONS
3. INDICATES INTERIOR BEARING WALL
4. FRAME EXTERIOR WALLS AND BEARING WALLS w/ 2 x 6 AT 16" O.C.
5. FRAME ENTRY FLOOR w/ 2 x 8 AT 16" O.C.

PLAN REVIEW ACCEPTANCE

FOR COMPLIANCE WITH THE APPLICABLE CONSTRUCTION CODES IDENTIFIED BELOW.

☒ BUILDING	☒ STRUCTURAL
☒ MECHANICAL	☒ PLUMBING
☒ ELECTRICAL	☒ ENERGY
☐ ACCESSIBILITY	☐ FIRE

PLAN REVIEW ACCEPTANCE OF DOCUMENTS DOES NOT AUTHORIZE CONSTRUCTION TO PROCEED IN VIOLATION OF ANY FEDERAL, STATE, OR LOCAL REGULATIONS.

BY: MEM DATE: 08/24/17

WEST COAST CODE CONSULTANTS, INC.

DYNAMIC STRUCTURES
1887 NORTH 1120 WEST PROVO, UTAH 84604
PH: (801) 356-1140 FAX: (801) 356-0001

Structural Plans for:

POWDER MOUNTAIN CABIN 1000

PROFESSIONAL STRUCTURAL ENGINEER
NO. 190917
JAY D. ADAMS
STATE OF UTAH
8/14/17

DESIGNED BY:	J.D.A.
CHECKED BY:	J.D.A.
SCALE:	1/4" = 1'-0"
DATE:	JULY 21, 2017
JOB No.	17-088

UPPER FLOOR AND ROOF FRAMING PLANS

SHEET No.

S2.2

PLAN REVIEW-08/14/2017

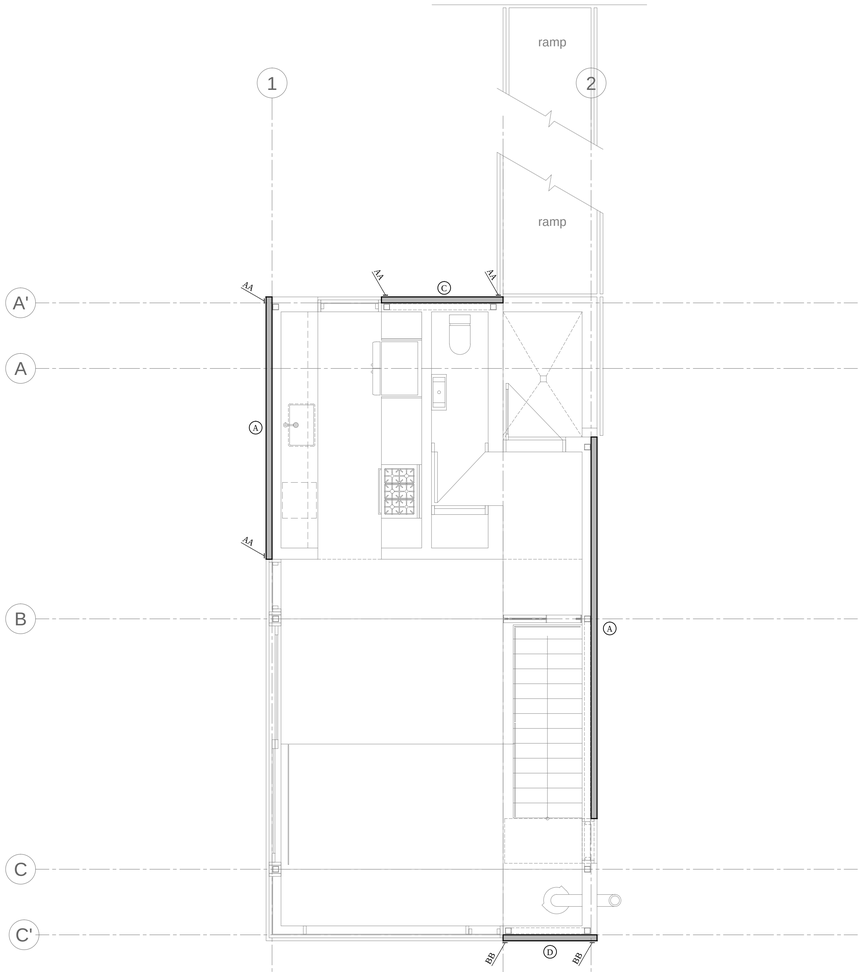

UPPER FLOOR SHEARWALL PLAN

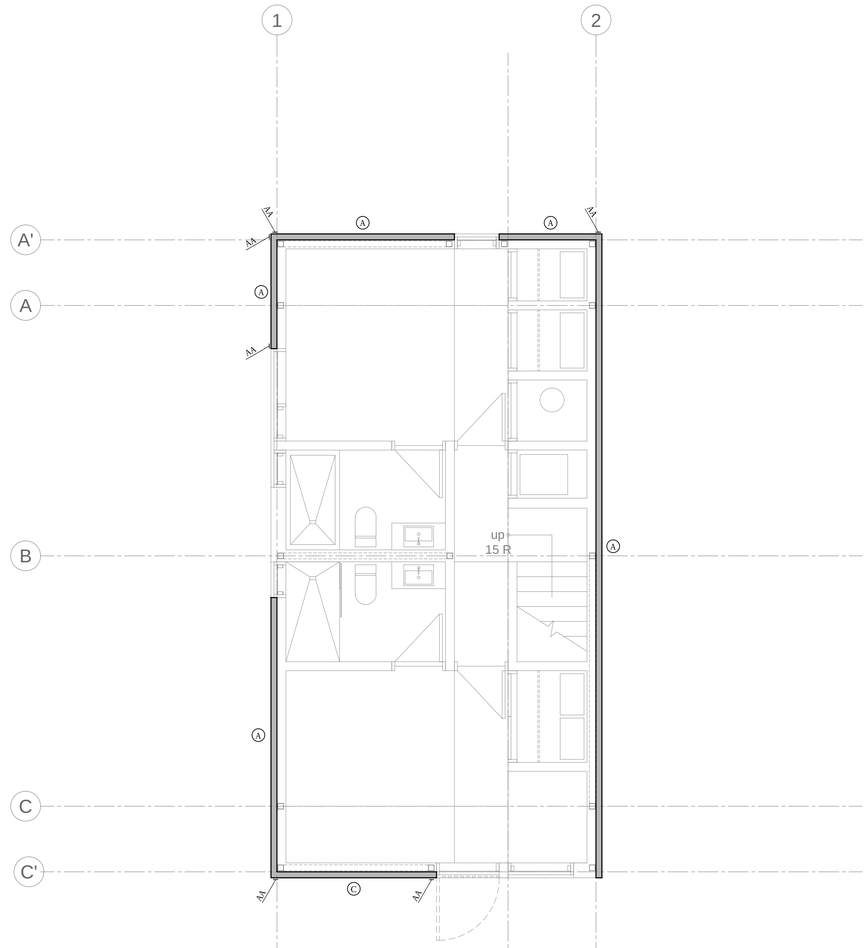

MAIN FLOOR SHEARWALL PLAN

SHEARWALL SCHEDULE

MARK	PANEL GRADE	PANEL THICKNESS	PANEL EDGE NAILING	PANEL FIELD NAILING	STUDS AT ADJOINING PANEL EDGES	ANCHOR BOLTS AT FOUNDATION LEVEL	SILL PLATE AT FOUNDATION
(A)	APA EXP. 1	7/16"	8d AT 6" O.C.	8d AT 12" O.C.	2x	⅝"dia. x 10" AT 32" O.C.	2x TREATED
(B)	APA EXP. 1	7/16"	8d AT 4" O.C.	8d AT 12" O.C.	2x	⅝"dia. x 10" AT 32" O.C.	2x TREATED
(C)	APA EXP. 1	7/16"	8d AT 3" O.C.	8d AT 12" O.C.	2x	⅝"dia. x 10" AT 32" O.C.	2x TREATED
(D)	APA EXP. 1	7/16"	8d AT 2" O.C.	8d AT 12" O.C.	3x	⅝"dia. x 10" AT 16" O.C.	2x TREATED

1. SEE GENERAL NOTES FOR ADDITIONAL INFORMATION
2. PLYWOOD, ORIENTED STRAND BOARD AND COMPOSITE BOARD (BUT NOT STRUCTURAL PARTICLE BOARD) ARE ACCEPTED AS EQUALS
3. ALL PANEL EDGES AT SHEAR WALLS SHALL BE BACKED WITH 2" NOMINAL FRAMING, EXCEPT WHERE INDICATED TO BE 3" NOMINAL ON SCHEDULE. 3x MATERIAL MAY BE REPLACED WITH 4x MATERIAL. MULTIPLE LAYERS OF 2x FRAMING SHALL NOT BE USED WHERE 3x FRAMING IS INDICATED.
4. ALL ANCHOR BOLTS TO HAVE A 3" x 3" x ¼" PLATE WASHER (SEE SEE SCHEDULE ABOVE FOR SPACING)
5. ALL STUDS IN SHEAR WALLS SHALL BE DOUGLAS FIR-LARCH
6. SHEAR WALL PANELS INDICATED ON SCHEDULE ARE TO BE SHEATHED FOR FULL HEIGHT OF THE WALL.
7. SEE SPECIAL INSPECTION PAGE FOR ADDITIONAL REQUIREMENTS
8. WHERE PANELS ARE APPLIED ON BOTH FACES OF A SHEAR WALL AND NAIL SPACING IS LESS THAN 6" ON CENTER ON EITHER SIDE, PANEL JOINTS SHALL BE OFFSET TO FALL ON DIFFERENT FRAMING MEMBERS. ALTERNATIVELY, THE WIDTH OF THE NAILED FACE OF FRAMING MEMBERS SHALL BE 3" NOMINAL OR GREATER AT ADJOINING PANEL EDGES AND NAILS AT ALL PANEL EDGES SHALL BE STAGGERED.

HOLD DOWN SCHEDULE

MARK	HOLDOWN	ATTACHMENT TO STUDS	FOUNDATION ANCHORS	MINIMUM STUDS	REMARKS
AA	SIMPSON MST48	(34) 16d SINKERS	N. A.	(2) 2x	SEE DETAILS ON S3.3
BB	SIMPSON MST72	(62) 16d SINKERS	N. A.	(2) 2x	SEE DETAILS ON S3.3

1. ALL ANCHORS ARE SIMPSON STRONG-TIE. (OR EQUAL)
2. INSTALLATION OF ALL HOLDOWN ANCHORS AND STRAPS SHALL BE PER MANUFACTURES RECOMMENDATIONS AND SPECIFICATIONS
3. PROVIDE EDGE NAILING ALONG STUDS CONNECTED TO HOLDOWN ANCHORS AND STRAPS
4. SEE SPECIAL INSPECTION PAGE FOR ADDITIONAL REQUIREMENTS

PLAN REVIEW ACCEPTANCE

FOR COMPLIANCE WITH THE APPLICABLE CONSTRUCTION CODES IDENTIFIED BELOW.

- [X] BUILDING
- [X] MECHANICAL
- [X] ELECTRICAL
- [ ] ACCESSIBILITY
- [X] STRUCTURAL
- [X] PLUMBING
- [X] ENERGY
- [ ] FIRE

PLAN REVIEW ACCEPTANCE OF DOCUMENTS DOES NOT AUTHORIZE CONSTRUCTION TO PROCEED IN VIOLATION OF ANY FEDERAL, STATE, OR LOCAL REGULATIONS.

BY: MEM DATE: 08/24/17

WEST COAST CODE CONSULTANTS, INC.

DYNAMIC STRUCTURES
1887 NORTH 1120 WEST PROVO, UTAH 84604
PH: (801) 356-1140 FAX: (801) 356-0001

Structural Plans for:

POWDER MOUNTAIN CABIN 1000

PROFESSIONAL STRUCTURAL ENGINEER
NO. 190917
JAY D. ADAMS
STATE OF UTAH
8/24/17

DESIGNED BY:	J.D.A.
CHECKED BY:	J.D.A.
SCALE:	1/4" = 1'-0"
DATE:	JULY 21, 2017
JOB No.	17-088

MAIN FLOOR & UPPER FLOOR SHEARWALL PLANS

SHEET No.

S3.1

1 PLAN REVIEW-08/14/2017

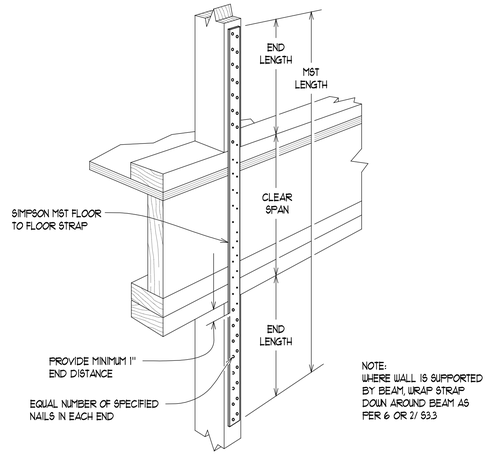

1 / S3.3 CONSTRUCTION DETAIL
NO SCALE

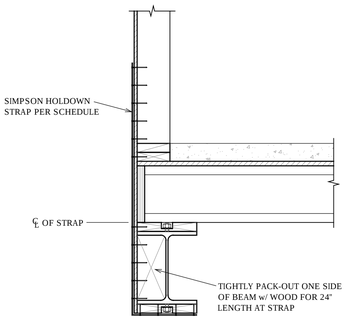

2 / S3.3 CONSTRUCTION DETAIL
NO SCALE

PLAN REVIEW ACCEPTANCE
FOR COMPLIANCE WITH THE APPLICABLE CONSTRUCTION CODES IDENTIFIED BELOW.
☒ BUILDING ☒ STRUCTURAL
☒ MECHANICAL ☒ PLUMBING
☒ ELECTRICAL ☒ ENERGY
☐ ACCESSIBILITY ☐ FIRE
PLAN REVIEW ACCEPTANCE OF DOCUMENTS DOES NOT AUTHORIZE CONSTRUCTION TO PROCEED IN VIOLATION OF ANY FEDERAL, STATE, OR LOCAL REGULATIONS.
BY: MEM DATE: 08/24/17
WEST COAST CODE CONSULTANTS, INC.

DYNAMIC STRUCTURES
1887 NORTH 1120 WEST PROVO, UTAH 84604
PH: (801) 356-1140 FAX: (801) 356-0001

Structural Plans for:
POWDER MOUNTAIN CABIN 1000

PROFESSIONAL STRUCTURAL ENGINEER
NO. 190917
JAY D. ADAMS
STATE OF UTAH

DESIGNED BY:	J.D.A.
CHECKED BY:	J.D.A.
SCALE:	AS SHOWN
DATE:	JULY 21, 2017
JOB No.	17-088

CONSTRUCTION DETAILS

SHEET No.
S3.3

PLAN REVIEW-08/14/2017

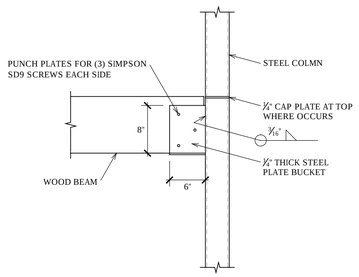

10 S4.1 CONSTRUCTION DETAIL
NO SCALE

= DIAPHRAGM EDGE NAILING SEE FRAMING NOTES
= SHEAR WALL EDGE NAILING SEE SHEAR WALL PLAN

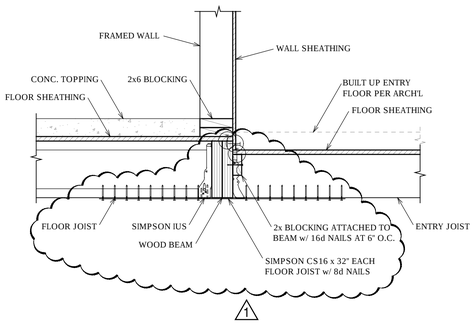

7 S4.1 CONSTRUCTION DETAIL
NO SCALE

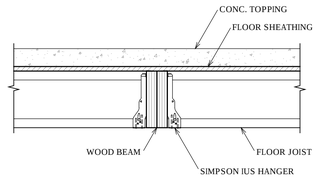

4 S4.1 CONSTRUCTION DETAIL
NO SCALE

= DIAPHRAGM EDGE NAILING SEE FRAMING NOTES
= SHEAR WALL EDGE NAILING SEE SHEAR WALL PLAN

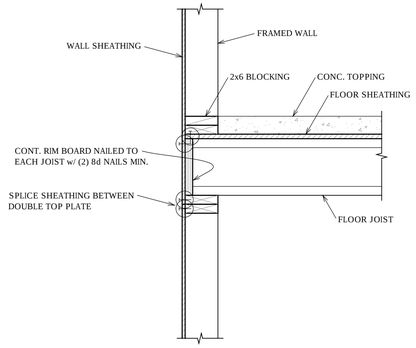

1 S4.1 CONSTRUCTION DETAIL
NO SCALE

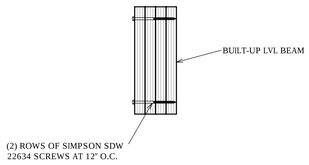

11 S4.1 CONSTRUCTION DETAIL
NO SCALE

= DIAPHRAGM EDGE NAILING SEE FRAMING NOTES
= SHEAR WALL EDGE NAILING SEE SHEAR WALL PLAN

8 S4.1 CONSTRUCTION DETAIL
NO SCALE

5 S4.1 CONSTRUCTION DETAIL
NO SCALE

= DIAPHRAGM EDGE NAILING SEE FRAMING NOTES
= SHEAR WALL EDGE NAILING SEE SHEAR WALL PLAN

2 S4.1 CONSTRUCTION DETAIL
NO SCALE

= DIAPHRAGM EDGE NAILING SEE FRAMING NOTES
= SHEAR WALL EDGE NAILING SEE SHEAR WALL PLAN

12 S4.1 CONSTRUCTION DETAIL
NO SCALE

9 S4.1 CONSTRUCTION DETAIL
NO SCALE

= DIAPHRAGM EDGE NAILING SEE FRAMING NOTES
= SHEAR WALL EDGE NAILING SEE SHEAR WALL PLAN

6 S4.1 CONSTRUCTION DETAIL
NO SCALE

3 S4.1 CONSTRUCTION DETAIL
NO SCALE

PLAN REVIEW ACCEPTANCE

FOR COMPLIANCE WITH THE APPLICABLE CONSTRUCTION CODES IDENTIFIED BELOW.

☒ BUILDING	☒ STRUCTURAL
☒ MECHANICAL	☒ PLUMBING
☒ ELECTRICAL	☒ ENERGY
☐ ACCESSIBILITY	☐ FIRE

PLAN REVIEW ACCEPTANCE OF DOCUMENTS DOES NOT AUTHORIZE CONSTRUCTION TO PROCEED IN VIOLATION OF ANY FEDERAL, STATE, OR LOCAL REGULATIONS.

MEM

BY: _____ DATE: 08/24/17

WEST COAST CODE CONSULTANTS, INC.

DYNAMIC STRUCTURES
1887 NORTH 1120 WEST PROVO, UTAH 84604
PH: (801) 356-1140 FAX: (801) 356-0001

Structural Plans for:

POWDER MOUNTAIN CABIN 1000

PROFESSIONAL STRUCTURAL ENGINEER
NO. 190917
JAY D. ADAMS
STATE OF UTAH

DESIGNED BY:	J.D.A.
CHECKED BY:	J.D.A.
SCALE:	AS SHOWN
DATE:	JULY 21, 2017
JOB No.	17-088

CONSTRUCTION DETAILS

SHEET No.

S4.1

1 PLAN REVIEW-08/14/2017

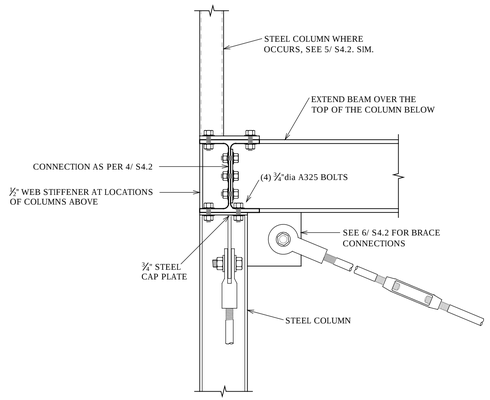

7 S4.2 CONSTRUCTION DETAIL
NO SCALE

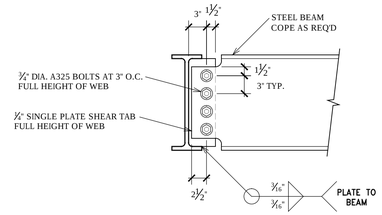

4 S4.2 CONSTRUCTION DETAIL
NO SCALE

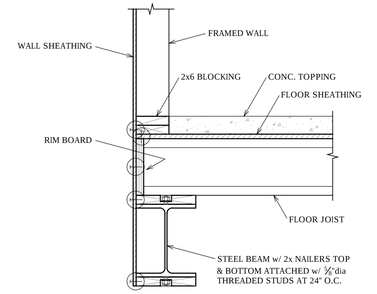

1 S4.2 CONSTRUCTION DETAIL
NO SCALE

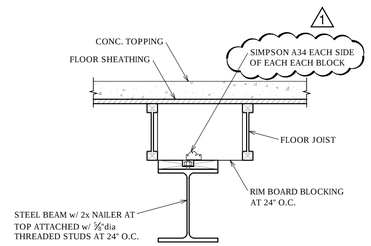

NOTE:
ELIMINATE NAILER AND BLOCKING AT STEEL BEAM SHOWN IN 6/ S4.2

8 S4.2 CONSTRUCTION DETAIL
NO SCALE

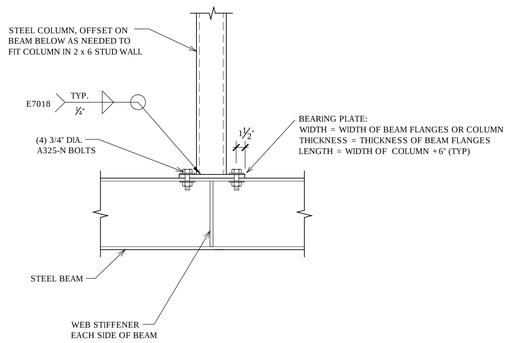

5 S4.2 CONSTRUCTION DETAIL
NO SCALE

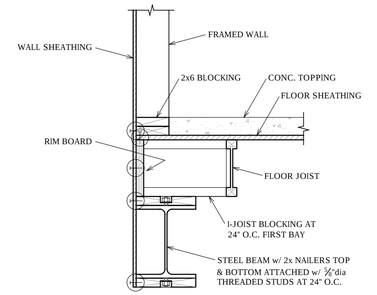

2 S4.2 CONSTRUCTION DETAIL
NO SCALE

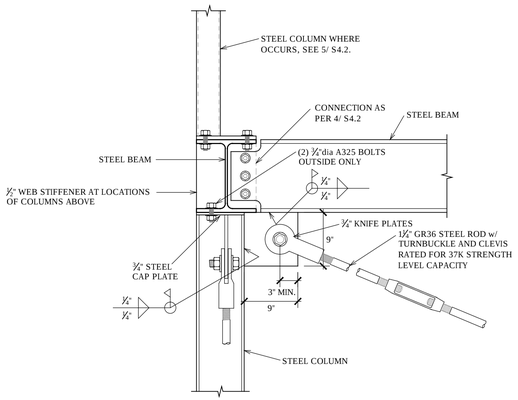

6 S4.2 CONSTRUCTION DETAIL
NO SCALE

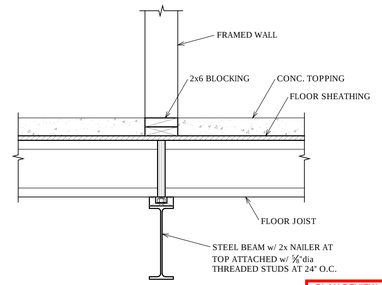

PLAN REVIEW ACCEPTANCE
FOR COMPLIANCE WITH THE APPLICABLE CONSTRUCTION CODES IDENTIFIED BELOW.
☒ BUILDING ☒ STRUCTURAL
☒ MECHANICAL ☒ PLUMBING
☒ ELECTRICAL ☒ ENERGY
☐ ACCESSIBILITY ☐ FIRE
PLAN REVIEW ACCEPTANCE OF DOCUMENTS DOES NOT AUTHORIZE CONSTRUCTION TO PROCEED IN VIOLATION OF ANY FEDERAL, STATE, OR LOCAL REGULATIONS.
BY: MEM DATE: 08/24/17
WEST COAST CODE CONSULTANTS, INC.

1 S4.2 CONSTRUCTION DETAIL
NO SCALE

DYNAMIC STRUCTURES
1887 NORTH 1120 WEST PROVO, UTAH 84604
PH: (801) 356-1140 FAX: (801) 356-0001

Structural Plans for:
POWDER MOUNTAIN CABIN 1000

PROFESSIONAL STRUCTURAL ENGINEER
NO. 190917
JAY D. ADAMS
STATE OF UTAH
8/14/17

DESIGNED BY:	J.D.A.
CHECKED BY:	J.D.A.
SCALE:	AS SHOWN
DATE:	JULY 21, 2017
JOB No.	17-088

CONSTRUCTION DETAILS

SHEET No.
S4.2

1 PLAN REVIEW-08/14/2017

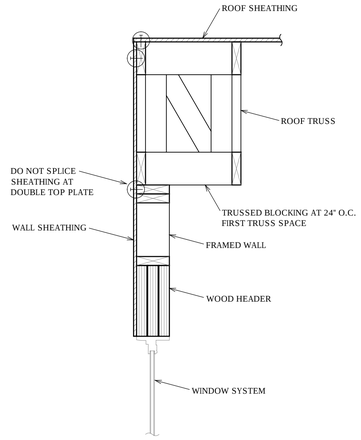

7 S5.1 CONSTRUCTION DETAIL
NO SCALE

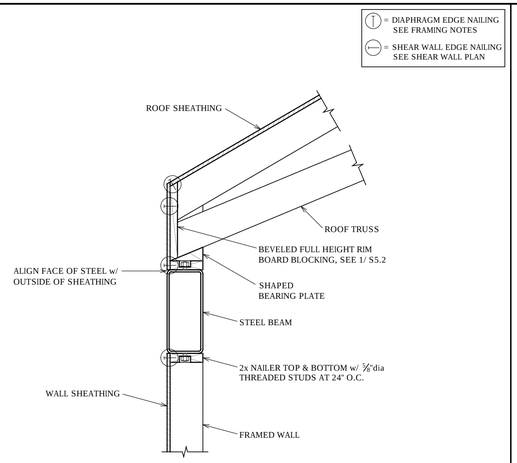

4 S5.1 CONSTRUCTION DETAIL
NO SCALE

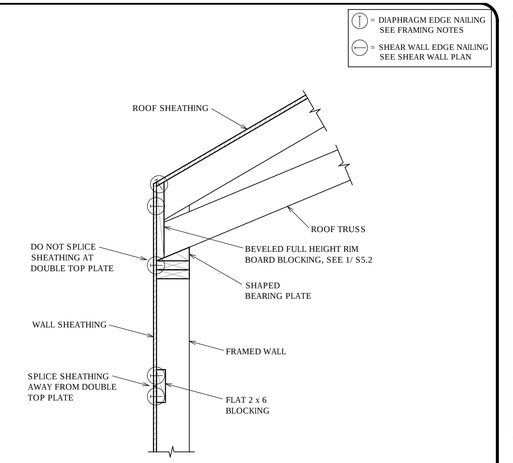

1 S5.1 CONSTRUCTION DETAIL
NO SCALE

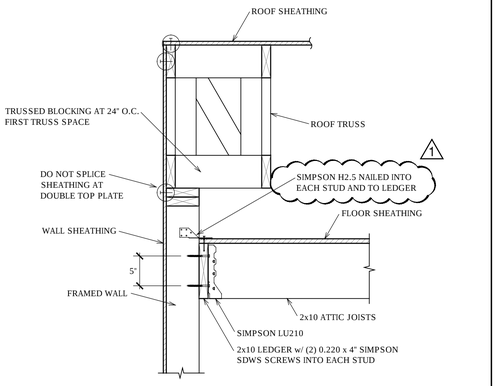

8 S5.1 CONSTRUCTION DETAIL
NO SCALE

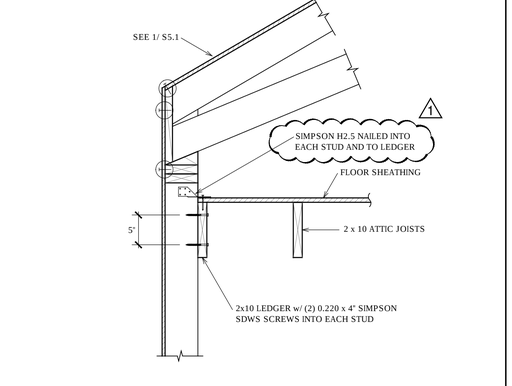

5 S5.1 CONSTRUCTION DETAIL
NO SCALE

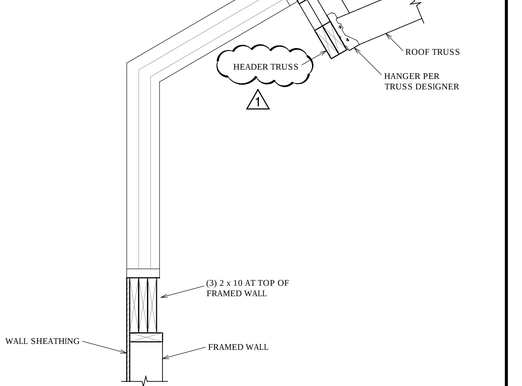

2 S5.1 CONSTRUCTION DETAIL
NO SCALE

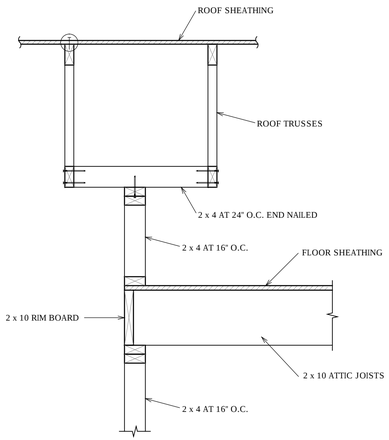

9 S5.1 CONSTRUCTION DETAIL
NO SCALE

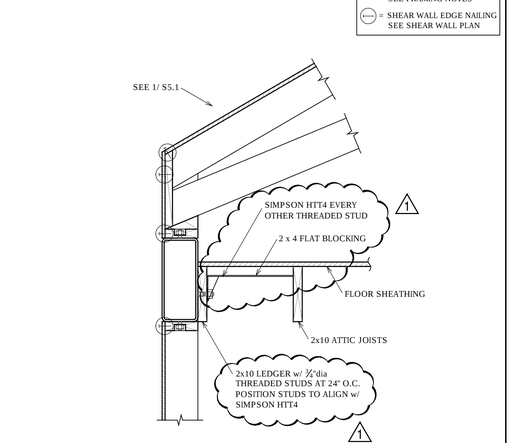

6 S5.1 CONSTRUCTION DETAIL
NO SCALE

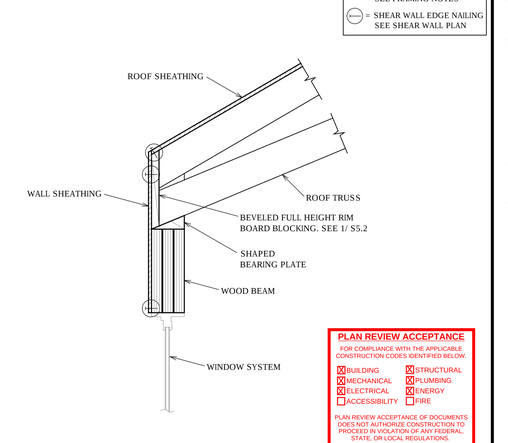

PLAN REVIEW ACCEPTANCE
FOR COMPLIANCE WITH THE APPLICABLE CONSTRUCTION CODES IDENTIFIED BELOW.
☒ BUILDING ☒ STRUCTURAL
☒ MECHANICAL ☒ PLUMBING
☒ ELECTRICAL ☒ ENERGY
☐ ACCESSIBILITY ☐ FIRE
PLAN REVIEW ACCEPTANCE OF DOCUMENTS DOES NOT AUTHORIZE CONSTRUCTION TO PROCEED IN VIOLATION OF ANY FEDERAL, STATE, OR LOCAL REGULATIONS.
BY: MEM DATE: 08/24/17
WEST COAST CODE CONSULTANTS, INC.

3 S5.1 CONSTRUCTION DETAIL
NO SCALE

DYNAMIC STRUCTURES
1887 NORTH 1120 WEST PROVO, UTAH 84604
PH: (801)356-1140 FAX: (801)356-0001

Structural Plans for:
POWDER MOUNTAIN CABIN 1000

PROFESSIONAL STRUCTURAL ENGINEER
NO. 190917
JAY D. ADAMS
STATE OF UTAH
8/14/17

DESIGNED BY:	J.D.A.
CHECKED BY:	J.D.A.
SCALE:	AS SHOWN
DATE:	JULY 21, 2017
JOB No.	17-088

CONSTRUCTION DETAILS

SHEET No.
S5.1

1 PLAN REVIEW-08/14/2017

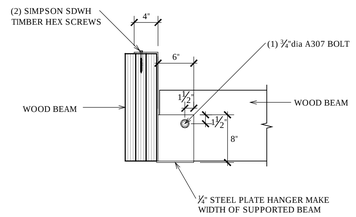

7 S5.2 CONSTRUCTION DETAIL
NO SCALE

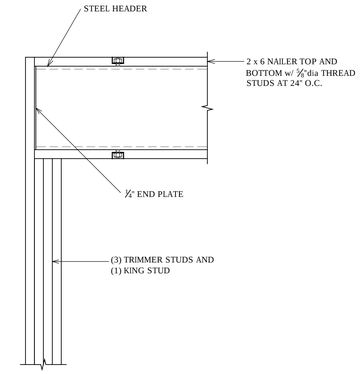

4 S5.2 CONSTRUCTION DETAIL
NO SCALE

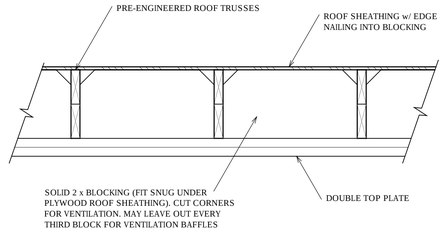

1 S5.2 CONSTRUCTION DETAIL
NO SCALE

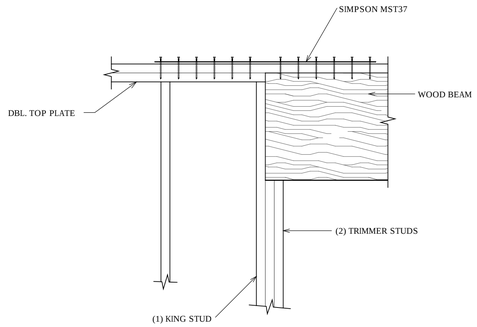

8 S5.2 CONSTRUCTION DETAIL
NO SCALE

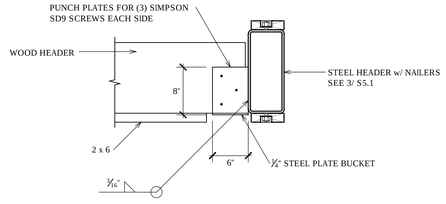

5 S5.2 CONSTRUCTION DETAIL
NO SCALE

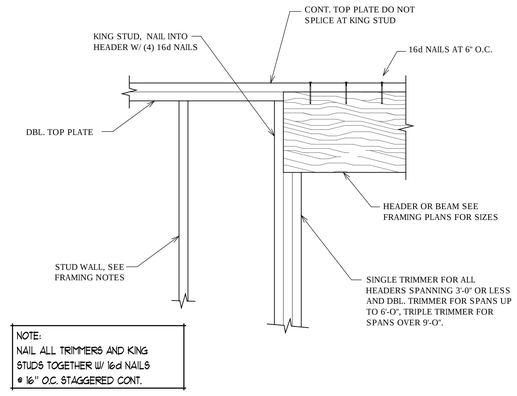

2 S5.2 CONSTRUCTION DETAIL
NO SCALE

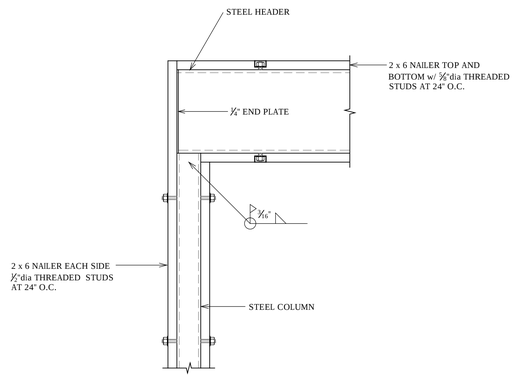

6 S5.2 CONSTRUCTION DETAIL
NO SCALE

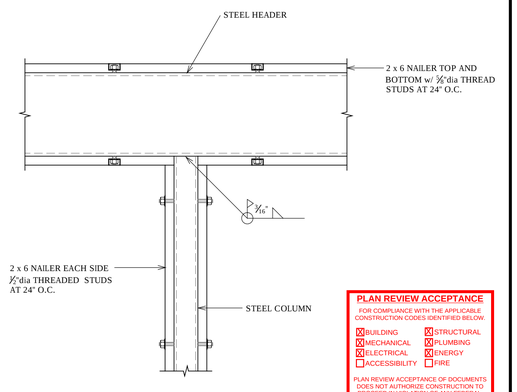

PLAN REVIEW ACCEPTANCE
FOR COMPLIANCE WITH THE APPLICABLE CONSTRUCTION CODES IDENTIFIED BELOW.
☒ BUILDING ☒ STRUCTURAL
☒ MECHANICAL ☒ PLUMBING
☒ ELECTRICAL ☒ ENERGY
☐ ACCESSIBILITY ☐ FIRE
PLAN REVIEW ACCEPTANCE OF DOCUMENTS DOES NOT AUTHORIZE CONSTRUCTION TO PROCEED IN VIOLATION OF ANY FEDERAL, STATE, OR LOCAL REGULATIONS.
BY: MEM DATE: 08/24/17
WEST COAST CODE CONSULTANTS, INC.

3 S5.2 CONSTRUCTION DETAIL
NO SCALE

DYNAMIC STRUCTURES
1887 NORTH 1120 WEST PROVO, UTAH 84604
PH: (801)356-1140 FAX: (801)356-0001

Structural Plans for:
POWDER MOUNTAIN CABIN 1000

PROFESSIONAL STRUCTURAL ENGINEER
NO. 190917
JAY D. ADAMS
STATE OF UTAH
8/14/17

DESIGNED BY:	J.D.A.
CHECKED BY:	J.D.A.
SCALE:	AS SHOWN
DATE:	JULY 21, 2017
JOB No.	17-088

CONSTRUCTION DETAILS

SHEET No.
S5.2

PLAN REVIEW-08/14/2017

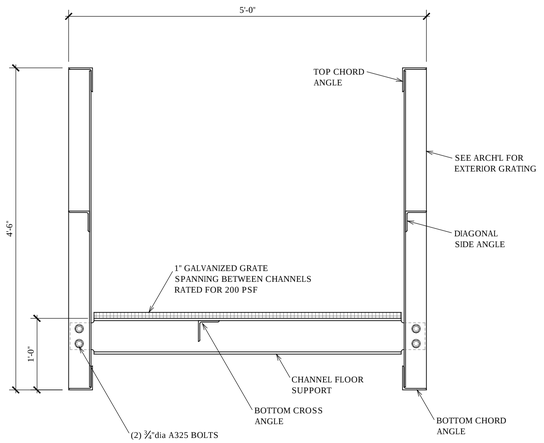

3 S6.1 CONSTRUCTION DETAIL
NO SCALE

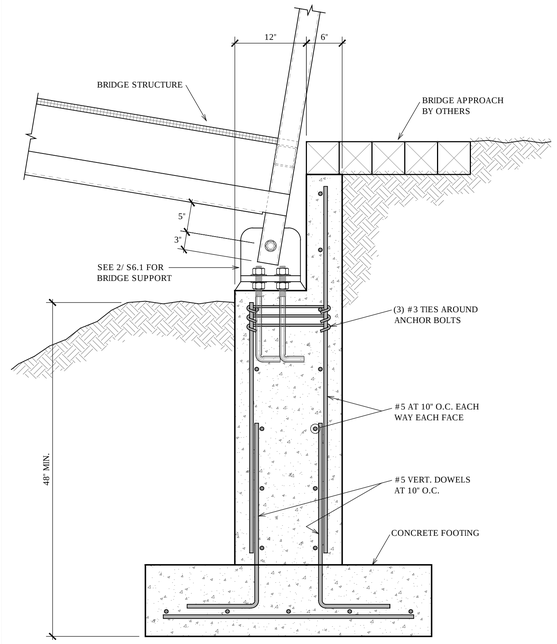

1 S6.1 CONSTRUCTION DETAIL
NO SCALE

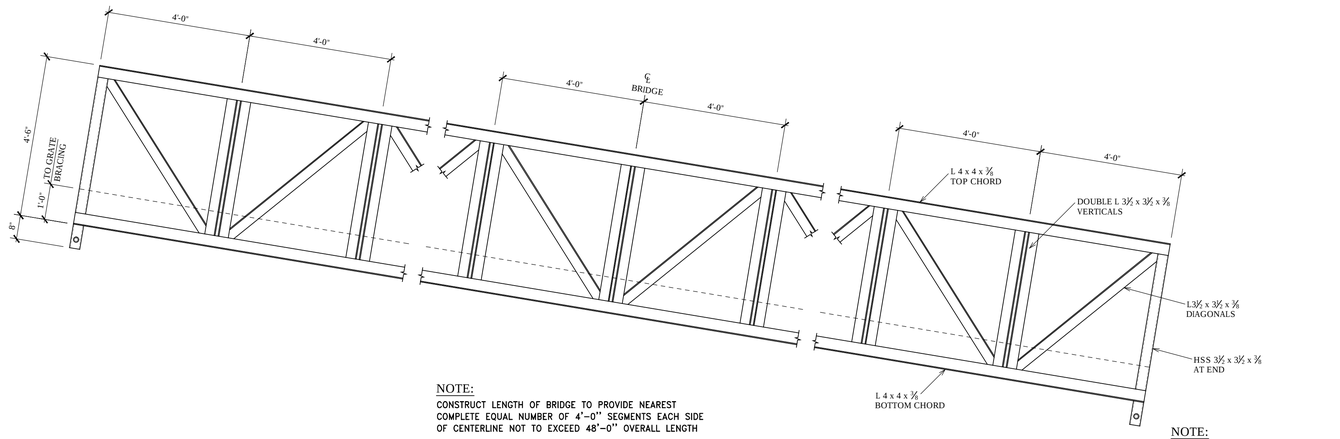

NOTE:
CONSTRUCT LENGTH OF BRIDGE TO PROVIDE NEAREST COMPLETE EQUAL NUMBER OF 4'-0" SEGMENTS EACH SIDE OF CENTERLINE NOT TO EXCEED 48'-0" OVERALL LENGTH

NOTE:
ALL CONTACT POINTS TO BE WELDED ALL AROUND WITH 5/16 FILLET WELDS

4 S6.1 SIDE ELEVATION
NO SCALE

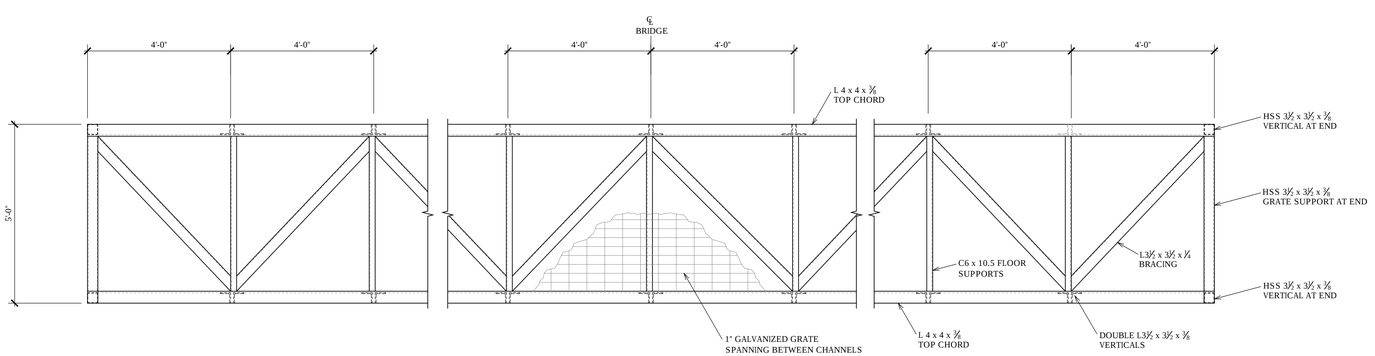

NOTE:
ALL CONTACT POINTS TO BE WELDED ALL AROUND WITH 5/16 FILLET WELDS

5 S6.1 PLAN VIEW
NO SCALE

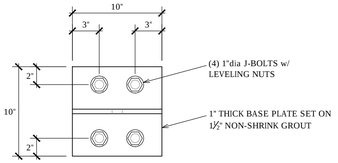

PLAN VIEW

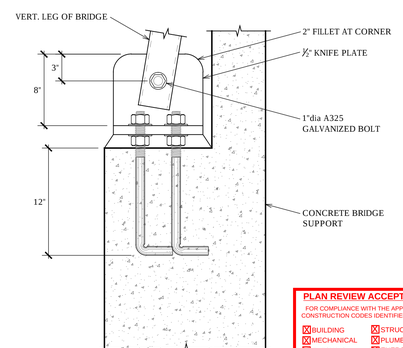

SECTION VIEW

PLAN REVIEW ACCEPTANCE
FOR COMPLIANCE WITH THE APPLICABLE CONSTRUCTION CODES IDENTIFIED BELOW:
[X] BUILDING [X] STRUCTURAL
[X] MECHANICAL [X] PLUMBING
[X] ELECTRICAL [X] ENERGY
[ ] ACCESSIBILITY [ ] FIRE
PLAN REVIEW ACCEPTANCE OF DOCUMENTS DOES NOT AUTHORIZE CONSTRUCTION TO PROCEED IN VIOLATION OF ANY FEDERAL, STATE, OR LOCAL REGULATIONS.
MEM
BY: DATE: 08/24/17
WEST COAST CODE CONSULTANTS, INC.

2 S6.1 CONSTRUCTION DETAIL
NO SCALE

DYNAMIC STRUCTURES
1887 NORTH 1120 WEST PROVO, UTAH 84604
PH: (801) 356-1140 FAX: (801) 356-0001

Structural Plans for:
POWDER MOUNTAIN CABIN 1000

DESIGNED BY:	J.D.A.
CHECKED BY:	J.D.A.
SCALE:	AS SHOWN
DATE:	JULY 21, 2017
JOB No.	17-088

CONSTRUCTION DETAILS

SHEET No.
S6.1

1 PLAN REVIEW-08/14/2017

THIS DRAWING, AS AN INSTRUMENT OF SERVICE, IS AND SHALL REMAIN THE PROPERTY OF SMD ENGINEERING, PLLC AND SHALL NOT BE REPRODUCED, PUBLISHED, OR USED IN ANY WAY WITHOUT THE PERMISSION OF SMD ENGINEERING, PLLC. THE INFORMATION, DESIGN, OR CONCEPTS REPRESENTED ON THIS DRAWING ARE CONFIDENTIAL AND ARE NOT FOR GENERAL DISTRIBUTION. © SMD ENGINEERING, PLLC 2016

ABBREVIATIONS

ø	ROUND, DIAMETER, PHASE	EWT	ENTERING WATER TEMPERATURE	OZ	OUNCE
ABS	ACRYLONITRILE–BUTADIENE–STYRENE, ABSOLUTE	EXH	EXHAUST	P	PUMP
ACCU	AIR COOLED CONDENSING UNIT	EXP	EXPANSION	PD	PRESSURE DROP/DIFFERENCE
A/C	AIR CONDITIONING	EXT	EXTERIOR	PE	POLYETHYLENE
AD	ACCESS DOOR, AREA DRAIN	F	FAHRENHEIT	PEX	CROSS–LINKED POLYETHYLENE
ADA	AMERICAN DISABILITIES ACT	FC	FLEXIBLE CONNECTION, FORWARD CURVED	PF	PRE–FILTER
AF	AIR FOIL, AIR FILTER	FCO	FLOOR CLEAN OUT	PH	PHASE
AFF	ABOVE FINISH FLOOR	FCU	FAN COIL UNIT	PIV	POST INDICATOR VALVE
AHU	AIR HANDLING UNIT	FD	FLOOR DRAIN, FIRE DAMPER	PLMB	PLUMBING
ALT	ALTITUDE, ALTERNATE	FDC	FIRE DEPARTMENT CONNECTION	POC	POINT OF CONNECTION
AMB	AMBIENT	FF	FINISH FLOOR, FINAL FILTER	PPM	PARTS PER MILLION
AMP	AMPERE (AMP, AMPS)	FL	FLOW LINE	PRS	PRESSURE REDUCING STATION
AP	ACCESS PANEL	FLEX	FLEXIBLE	PRV	PRESSURE REDUCING VALVE
APD	AIR PRESSURE DROP	FO	FLAT OVAL	PSF	POUNDS PER SQUARE FOOT
ARCH	ARCHITECT	FP	FIRE PROTECTION	PSI	POUNDS PER SQUARE INCH
AS	AIR SEPARATOR	FPM	FEET PER MINUTE	PTAC	PACKAGED TERMINAL AIR CONDITIONER
AV	ACID VENT, AIR VENT	FS	FLOOR SINK	PVC	POLYVINYL CHLORIDE
B	BOILER	FSD	FIRE SMOKE DAMPER	R	THERMAL RESISTANCE, RANKINE, RETURN
BAL	BALANCE	FSTAT	FREEZESTAT	RA	RETURN AIR
BAS	BUILDING AUTOMATION SYSTEM	FT	FEET	RAD	RADIUS
BBR	BASEBOARD RADIATOR	FTR	FIN TUBE RADIATION	RCP	RADIANT CEILING PANEL
BDD	BACKDRAFT DAMPER	FURN	FURNACE, FURNISH, FURNITURE	RD	ROOF DRAIN
BFP	BACKFLOW PREVENTER	FV	FACE VELOCITY	RECIRC	RECIRCULAT(E),(OR),(ING)
BFV	BUTTERFLY VALVE	G	GAUGE, NATURAL GAS	REF	REFRIGERAT(OR),(ION)
BHP	BRAKE HORSEPOWER	GA	GAGE	REQ'D	REQUIRED
BI	BACKWARD INCLINED	GAL	GALLON	RF	RETURN FAN
BOD	BOTTOM OF DUCT	GALV	GALVANIZED	RH	RELATIVE HUMIDITY
BOP	BOTTOM OF PIPE	GC	GENERAL CONTRACTOR	RM	ROOM
BT	BATH TUB	GD	GARAGE DRAIN	RPBP	REDUCED PRESS. BACKFLOW PREVENTER
BTU	BRITISH THERMAL UNIT	GH	GRAVITY HOOD	RPM	REVOLUTIONS PER MINUTE
BTUH	BRITISH THERMAL UNITS/HR	GPM	GALLONS PER MINUTE	RTU	ROOF TOP UNIT
BV	BALL VALVE	GT	GREASE TRAP	REV	REVOLUTION, REVISION, REVERSE
C	CHILLER	HB	HOSE BIBB	S	SECONDS, SUPPLY, SINK
CA	COMPRESSED AIR, COMBUSTION AIR	H/C, HC	HEATING COIL	SA	SUPPLY AIR, SOUND ATTENUATOR
CAP	CAPACITY	HEPA	HIGH EFFICIENCY PARTICULATE AIR	SAN	SANITARY
CAV	CONSTANT AIR VOLUME	HOA	HAND, OFF, AUTO	SAT	SATURATED
C/C, CC	COOLING COIL	HP	HORSEPOWER, HEAT PUMP	SCFM	STANDARD CUBIC FEET PER MINUTE
CD	CONDENSATE DRAIN, CEILING DIFFUSER	HR	HOUR	SD	STORM DRAIN, SMOKE DAMPER
CFM	CUBIC FEET PER MINUTE	HSTAT	HUMIDISTAT	SECT	SECTION
CFOI	CONTRACTOR FURN., OWNER INSTALLED	HT	HEIGHT	SEN	SENSIBLE
CHW	CHILLER WATER	HVAC	HEATING, VENTILATING, AIR–CONDITIONING	SHT	SHEET
CO	CLEAN OUT, CARBON MONOXIDE	HX	HEAT EXCHANGER	SIM	SIMILAR
CO2	CARBON DIOXIDE	HZ	FREQUENCY	SL	SEA LEVEL
CONC	CONCRETE	IAQ	INDOOR AIR QUALITY	SP	STATIC PRESSURE
COND	CONDENS(ER),(ING),(ATE),(ATION)	ID	INSIDE DIAMETER	SPEC	SPECIFICATION
CONT	CONTINUOUS	IE	INVERT ELEVATION	SQ	SQUARE
COP	COEFFICIENT OF PERFORMANCE, COPPER	IN	INCH	SS	SERVICE SINK, STAINLESS STEEL
COTG	CLEANOUT TO GRADE	IN WC	INCHES, WATER COLUMN	STC	SOUND TRANSMISSION CLASS
CPVC	CHLORINATED POLY VINYL CHLORIDE	INV	INVERT	STD	STANDARD
CT	COOLING TOWER	I/O	INPUT/OUTPUT	STRUCT	STRUCTUR(E),(AL)
CU	CONDENSING UNIT, CUBIC	JS	JANITORS SINK	SUCT	SUCTION
CV	CONTROL VALVE, CONSTANT VOLUME	KEC	KITCHEN EQUIPMENT CONTRACTOR	T	TEMPERATURE, TIME
CUH	CABINET UNIT HEATER	KW	KILOWATT	T&P	TEMPERATURE AND PRESSURE
CW	CONDENSER WATER, CLOCKWISE	KWH	KILOWATT HOUR	TAB	TEST, ADJUST AND BALANCE
DA	DISCHARGE AIR	LAT	LEAVING AIR TEMPERATURE	TDH	TOTAL DYNAMIC HEAD
dB	DECIBELS	LAV	LAVATORY	TEMP	TEMPERATURE, TEMPORARY
DB	DRY BULB TEMPERATURE	LBS	POUNDS	TONS	TONS OF REFRIGERATION
DDC	DIRECT DIGITAL CONTROL	LF	LINEAR FEET	TOD	TOP OF DUCT
DF	DRINKING FOUNTAIN	LVR	LOUVER	TOP	TOP OF PIPE
DIA	DIAMETER	LWT	LEAVING WATER TEMPERATURE	TSP	TOTAL STATIC PRESSURE
DMPR	DAMPER	MA	MEDICAL AIR, MIXED AIR	TSTAT	THERMOSTAT
DP	DEWPOINT, DIFFERENTIAL PRESSURE	MAT	MATERIAL, MIXED AIR TEMPERATURE	TYP	TYPICAL
DR	DRAIN	MAU	MAKE UP AIR HANDLING UNIT	U	URINAL
DSN	DOWNSPOUT NOZZLE	MAV	MANUAL AIR VENT	UH	UNIT HEATER
DW	DISHWASHER	MAX	MAXIMUM	UNO	UNLESS NOTED OTHERWISE
DWG	DRAWING	MBH	BTU/HR X 1,000	V	VENT, VALVE
DWV	DRAIN, WASTE, VENT	MC	MECHANICAL CONTRACTOR	VA	VOLT AMPERE
DX	DIRECT EXPANSION	MCC	MOTOR CONTROL CENTER	VAC	VACUUM
(E) EXIST	EXISTING	MECH	MECHANICAL	VAV	VARIABLE AIR VOLUME
EAT	ENTERING AIR TEMPERATURE	MH	MAN HOLE	VD	VOLUME DAMPER
EC	ELECTRICAL CONTRACTOR	MIN	MINIMUM, MINUTE	VFD	VARIABLE FREQUENCY DRIVE
ECON	ECONOMIZER	MVD	MANUAL VOLUME DAMPER	VI	VIBRATION ISOLATOR
EDH	ELECTRIC DUCT HEATER	NA	NOT APPLICABLE	VOL	VOLUME
EER	ENERGY EFFICIENCY RATIO	NC	NOISE CRITERIA, NORMALLY CLOSED	VP	VELOCITY PRESSURE
EF	EXHAUST FAN	NIC	NOT IN CONTRACT	VSC	VARIABLE SPEED CONTROLLER
EFF	EFFICIENCY	NO	NORMALLY OPEN, NITROUS OXIDE	VTR	VENT THROUGH ROOF
EL, ELEV	ELEVATION	NO.	NUMBER	W	WASTE
EMER	EMERGENCY	NOM	NOMINAL	W/	WITH
ENCL	ENCLOSURE	NR	NOISE REDUCTION	W/O	WITHOUT
ESP	EXTERNAL STATIC PRESSURE	NRC	NOISE REDUCTION COEFFICIENT	WB	WET BULB
ET	EXPANSION TANK	NTS	NOT TO SCALE	WC	WATER CLOSET
EUH	ELECTRIC UNIT HEATER	OA	OUTSIDE AIR	WCO	WALL CLEAN OUT
EVAP	EVAPORAT(E),(ING),(ED),(OR)	OBD	OPPOSED BLADE DAMPER	WHA	WATER HAMMER ARRESTOR
EWB	ENTERING WET BULB	OD	OVERFLOW DRAIN, OUTSIDE DIAMETER	WT	WEIGHT
EWC	ELECTRIC WATER COOLER	OF/CI	OWNER FURN./CONTRACTOR INSTALLED	YCO	YARD CLEANOUT
EWH	ELECTRIC WATER HEATER	OF/OI	OWNER FURNISHED/OWNER INSTALLED		
EWS	EYE WASH STATION	OS&Y	OPEN SCREW & YOLK		

MECHANICAL LEGEND

BALL VALVE

BUTTERFLY VALVE

GATE VALVE

ANGLE GATE VALVE, PLAN VIEW

GLOBE VALVE

PLUG VALVE

3–WAY VALVE

NON–RISING STEM/OS&Y VALVE ACTUATOR

LEVER VALVE ACTUATOR

ELECTRONIC/PNEUMATIC VALVE ACTUATOR

SOLENOID/DIAPHRAGM VALVE ACTUATOR

CHECK VALVE

SPRING CHECK VALVE

BALL VALVE W/HOSE END & CAP

NEEDLE VALVE

PRESSURE REDUCING VALVE

REDUCED PRESSURE BACKFLOW PREVENTER — RPBP

INLINE PUMP

PRESSURE & TEMPERATURE RELIEF VALVE

SQUARE HEAD COCK

STRAINER, W/BV HOSE END & CAP

TEMPERATURE & PRESSURE PLUG

CIRCUIT SETTER

AUTOMATIC FLOW CONTROL VALVE

AUTOMATIC/MANUAL AIR VENT — AV, MAV

VENTURI FLOW MEASURING DEVICE

THERMOMETER/PRESSURE GAGE W/COCK

TEMPERATURE SENSOR

CONCENTRIC/ECCENTRIC REDUCER

UNION

BUSHING/CAP

ELBOW UP/DOWN

TOP/BOTTOM CONNECTION, 45° OR 90°

TEE UP/SIDE/DOWN

FLOW/PITCH DOWN DIRECTION — 2%

ANCHOR/GUIDE

EXPANSION JOINT/FLEX CONNECTOR

FLOOR OR GRADE CLEANOUT, W/CONC PAD

WALL CLEANOUT, HOSE BIBB OR WALL HYDRANT — HB, WH

FLOOR DRAIN/FLOOR SINK

VENT

COLD WATER

HOT WATER

CONDENSATE DRAIN — D

SANITARY SEWER

SANITARY SEWER BELOW GRADE

NATURAL GAS — G

HEATING WATER SUPPLY — HWS

HEATING WATER RETURN — HWR

DUCT SIZE, (1ST FIGURE, SIDE SHOWN; 2ND FIGURE, OTHER SIDE) — 24/12

DIRECTION OF FLOW

LINED DUCT — 24/12

HIDDEN DUCT — (24/12)

WYE W/45° ENTRY

TEE W/45° ENTRY

ELBOW W/TURNING VANES

HELICAL FLEX DUCT

SUPPLY DUCT SECTION UP/DOWN — 24/12

RETURN DUCT SECTION UP/DOWN — 24/12

EXHAUST DUCT SECTION UP/DOWN — 24/12

SUPPLY DUCT SECTION UP/DOWN — 18ø

ROUND BRANCH — 12ø, 18ø

DUCT TRANSITION — 24/12, 18/12

SPIN–IN W/VOLUME DAMPER — 24/12

FIRE SMOKE DAMPER — S

FIRE DAMPER — F

SMOKE DAMPER — S

MOTORIZED DAMPER — M

GRAVITY BACKDRAFT DAMPER — G

MANUAL VOLUME DAMPER — VD

SIDE/PLAN ACCESS DOOR

SUPPLY AIR DEVICE

RETURN AIR DEVICE

EXHAUST AIR DEVICE

DUCT PRESSURE CLASS/CHANGE — 2", 2"|1"

THERMOSTAT/HUMIDISTAT — T, H

POINT OF CONNECTION/REMOVAL

KEYED NOTE/REVISION — 1, 1

WALL SWITCH — $

EQUIPMENT CALLOUT — DESIGNATOR, CHARACTERISTIC

PLUMBING FIXTURE CALLOUT — FIXTURE

DETAIL TAG — DETAIL NO. 1, SHEET NO. MH501

AIR DEVICE CALLOUT

PROJECT NOTES

1. ALL WORK SHALL BE PERFORMED IN ACCORDANCE WITH, 2015 INTERNATIONAL BUILDING CODE, 2015 INTERNATIONAL MECHANICAL CODE, 2015 INTERNATIONAL PLUMBING CODE, 2015 INTERNATIONAL FUEL GAS CODE, 2015 INTERNATIONAL RESIDENTIAL CODE AND 2015 INTERNATIONAL ENERGY CODE, INCLUDING STATE AND LOCAL AMENDMENTS, SUBJECT TO AUTHORITY HAVING JURISDICTION INTERPRETATION.
2. CLOSELY COORDINATE NEW MECHANICAL AND PLUMBING CONSTRUCTION WITH ALL MECHANICAL, ELECTRICAL, ARCHITECTURAL AND STRUCTURAL MEMBERS. DUCTWORK AND PIPE ROUTING IS APPROXIMATE, DIAGRAMMATIC AND IS NOT TO BE SCALED. PROVIDE ALTERNATE ROUTING, OFFSETS AND TRANSITIONS AS REQUIRED FOR COORDINATION OF ALL WORK WITHOUT ADDITIONAL COST.
3. DO NOT SHUT–OFF/PUT OUT SERVICE ANY SYSTEMS/SERVICES WITHOUT FIRST COORDINATING ALL DOWNTIME WITH THE OWNER'S PERSONNEL.
4. PROVIDE SEISMIC RESTRAINT FOR ALL MECHANICAL AND PLUMBING EQUIPMENT AND PIPING IN ACCORDANCE WITH 2012 IBC, IMC, AND IPC. SEISMIC BUILDING CATEGORY (IBC) "II", SITE CLASS "D", SD1=0.365, AND SDS=0.686.
5. CONTRACTOR SHALL PROVIDE 1 YEAR STANDARD WARRANTY.
6. SUBMIT ALL EQUIPMENT, AIR DEVICES, VALVES, FITTINGS, PIPE MATERIALS, INSULATION, AND ACCESSORIES TO BE USED IN PROJECT. SUBMIT ALL EQUIPMENT AND ACCESSORIES LISTED ON MECHANICAL SCHEDULE SHEET. SUBMIT ELECTRONIC SUBMITTAL TO ARCHITECT FOR REVIEW AND APPROVAL BY ENGINEER. DO NOT PLACE ORDER UNTIL ENGINEER HAS REVIEWED AND APPROVED SUBMITTAL.
7. RECORD ALL FIELD CHANGES ON RECORD DRAWINGS AND SUBMIT TO ENGINEER DURING PROJECT CLOSE OUT.
8. INSTALL ALL EQUIPMENT IN ACCORDANCE WITH MANUFACTURERS INSTALLATION INSTRUCTIONS.
9. PROJECT ELEVATION IS 8800 FT FOR EQUIPMENT SELECTION.
10. PROVIDE ALL DUCT IN ACCORDANCE WITH SMACNA STANDARDS FOR 2" WC PRESSURE CLASS. SEAL ALL TRANSVERSE AND LONGITUDINAL SEAMS AND JOINTS EXCEPT FOR WELDED OR LOCKING–TYPE LONGITUDINAL JOINTS.
11. DUCT DIMENSIONS SHOWN ARE INSIDE FLOW DIMENSIONS.
12. PROVIDE TEST AND BALANCE REPORT TO ENGINEER FOR REVIEW AND APPROVAL.
13. INSULATE ALL HEATING WATER PIPE WITH 1 1/2" INSULATION WITH ASJ.
14. PROVIDE ISOLATION VALVES SERVING EACH PIECE OF EQUIPMENT.
15. DISINFECT NEW DOMESTIC WATER PIPING. SUBMIT DISINFECTION REPORT TO ENGINEER FOR REVIEW.
16. ALL WASTE AND VENT IS 2" UNLESS OTHERWISE NOTED.
17. ALL WASTE AND VENT PIPE SHALL BE SCHEDULE 40 ABS, SCHEDULE 40 PVC, OR SERVICE WEIGHT CAST IRON.
18. PROVIDE DEEP SEAL TRAP, TRAP GUARD, OR TRAP PRIMERS ON ALL FLOOR DRAINS, ALL FLOOR SINKS, AND ALL STANDPIPES THAT DO NOT HAVE A RELIABLE SOURCE TO MAINTAIN TRAP SEAL.
19. T–DRILL FITTINGS SHALL NOT BE USED IN THIS PROJECT.
20. INSULATE ALL HOT WATER AND RETURN PIPE WITH 1" INSULATION WITH ASJ. INSULATE ALL COLD WATER PIPE WITH 1/2" INSULATION WITH ASJ.
21. ALL "BRANCH" HOT AND COLD WATER LINES FEEDING ONE OR TWO SINKS OR LAV'S ARE 1/2". DROP IN WALL AND DISTRIBUTE TO SINKS OR LAV'S AS REQ'D. PROVIDE INDIVIDUAL STOPS FOR EACH SINK OR LAV.
22. ALL LIQUID PETROLEUM PIPE SHALL BE SCHEDULE 40 STEEL PIPE WITH SCREWED FITTINGS FOR 2 LB SERVICE. CONTRACTOR MAY USE CSST DOWNSTREAM OF REGULATORS FOR FINAL EQUIPMENT CONNECTION.
23. PROVIDE "DIRT LEG" AHEAD OF EACH PIECE OF FUEL FIRED EQUIPMENT.
24. SUPPORT GAS PIPING WITH METAL PIPE HOOKS, METAL PIPE STRAPS, METAL BANDS, METAL–BRACKETS, METAL HANGERS OR BUILDING STRUCTURAL COMPONENTS WITH SUPPORTS SPACED CLOSER THAN INDICATED IN GAS PIPE SUPPORT SCHEDULE. MOUNT GAS PIPE "TIGHT" TO BUILDING STRUCTURE OR WITHIN 1'–0" OF BUILDING STRUCTURE TO AVOID ADDITIONAL SEISMIC BRACING.

SHEET LIST

MH001 – MECHANICAL LEGEND AND NOTES
MH101 – MECHANICAL FLOOR PLANS
PP100 – PLUMBING LOWER FP – BELOW FLOOR
PP101 – PLUMBING FLOOR PLANS – WASTE AND VENT
PP102 – PLUMBING FLOOR PLANS – DOMESTIC
PP501 – PLUMBING DETAILS
PP601 – PLUMBING SCHEDULES
PP901 – PLUMBING WASTE AND VENT ISOMETRIC

Horizon Neighborhood
CABINS

7758 E. Horizon Run
Summit Powder Mountain
Eden, Utah

MacKay-Lyons Sweetapple Architects Limited

2188 Gottingen St.
Halifax, Nova Scotia
Canada B3K 3B4

ph: (902) 429.1867
fax: (902) 429.6276

MSS Mechanical Service & Systems, Inc.
1055 South 700 West
Salt Lake City, UT 84104
801-255-9333

SMD ENGINEERING, PLLC
"Engineered Mechanical Solutions"
986 WEST ATHERTON DRIVE, SUITE 200
TAYLORSVILLE, UTAH 84123
(801) 268-3828, FAX (801) 268-3297
WWW.SMDENGINEERING.COM

PLAN REVIEW ACCEPTANCE
FOR COMPLIANCE WITH THE APPLICABLE CONSTRUCTION CODES IDENTIFIED BELOW.
☒ BUILDING ☒ STRUCTURAL
☒ MECHANICAL ☒ PLUMBING
☒ ELECTRICAL ☒ ENERGY
☐ ACCESSIBILITY ☐ FIRE
PLAN REVIEW ACCEPTANCE OF DOCUMENTS DOES NOT AUTHORIZE CONSTRUCTION TO PROCEED IN VIOLATION OF ANY FEDERAL, STATE, OR LOCAL REGULATIONS.
BY: MEM DATE: 08/24/17
WEST COAST CODE CONSULTANTS, INC.

1	CODE REVIEW	08/16/2017
##		##XX/####
##		##XX/####
##		##XX/####
##		##XX/####
##		##XX/####
##		##XX/####
##		##XX/####
##		##XX/####
##		##XX/####
No.	Description	Date

Revision:

NOTES:

COPYRIGHT RELATED TO THE USE OF THIS DRAWING:
The use of this drawing shall be governed by standard copyright law as generally accepted in architectural practice.

ARCHITECT'S REQUIREMENTS AND APPROVALS:
It is the Builder's responsibility to notify MacKay-Lyons Sweetapple Architects Ltd. and to seek prior written approval for materials and workmanship which deviates from instructions provided by the Architect.

ENGINEER'S REQUIREMENTS AND APPROVALS:
It is the Builder's responsibility to notify MacKay-Lyons Sweetapple Architects Ltd. and to seek prior written approval for materials and workmanship which deviates from instructions provided by the Engineer.

AUTHORITIES' REQUIREMENTS AND APPROVALS:
All materials and workmanship must comply with the requirements of all authorities having jurisdication over the work. It is the Builder's responsibility to gain necessary approval from all relevant Authorities.

DIMENSIONS:
All dimensions must be verified on site. Do not scale off drawings. Plans take precedent over elevations. In the absence of dimensions, or if discrepancies exist, consult Architect. All minimum dimensions are to comply with the National Building Code of Canada.

SHOP DRAWINGS:
Submit shop drawings to the Architect and Engineer for approval prior to manufacture of prefabricated elements of the building.

MECHANICAL LEGEND AND NOTES

scale: AS NOTED
date: 03/13/2017
drawn: STAFF
chk'd: SMD

MH001

permit set - march 13, 2017

THIS DRAWING, AS AN INSTRUMENT OF SERVICE, IS AND SHALL REMAIN THE PROPERTY OF SMD ENGINEERING, PLLC. THE INFORMATION, DESIGN, OR CONCEPTS REPRESENTED ON THIS DRAWING ARE CONFIDENTIAL AND ARE NOT FOR GENERAL DISTRIBUTION. © SMD ENGINEERING, PLLC 2016
THE PERMISSION OF SMD ENGINEERING, PLLC AND SHALL NOT BE REPRODUCED, PUBLISHED, OR USED IN ANY WAY WITHOUT

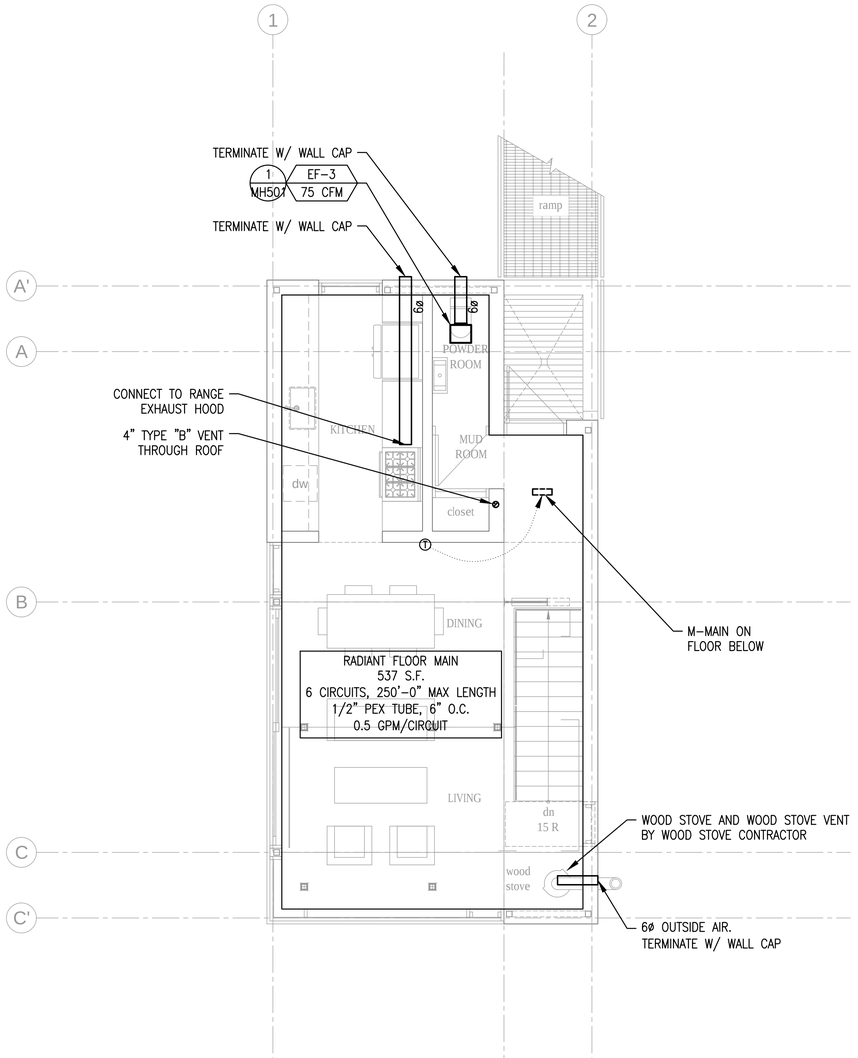

2 MH101 1000 SF - MECHANICAL MAIN FLOOR PLAN BUILDINGS 13, 16, 19, 26, 27

NORTH

4' 2' 1' 0 4' 8'

SCALE: 1/4" = 1'-0"

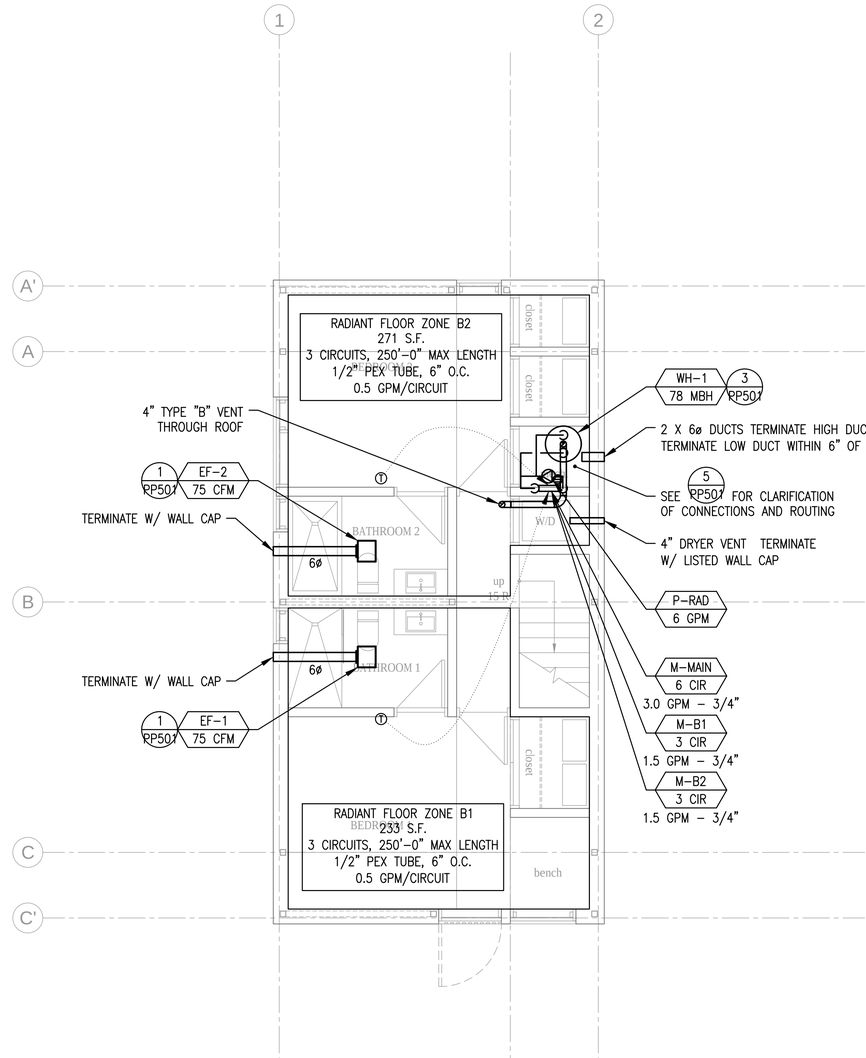

1 MH101 1000 SF - MECHANICAL LOWER FLOOR PLAN BUILDINGS 13, 16, 19, 26, 27

NORTH

4' 2' 1' 0 4' 8'

SCALE: 1/4" = 1'-0"

Horizon Neighborhood
CABINS

7758 E. Horizon Run
Summit Powder Mountain
Eden, Utah

MacKay-Lyons Sweetapple Architects Limited

2188 Gottingen St.
Halifax, Nova Scotia
Canada B3K 3B4

ph: (902) 429.1867
fax: (902) 429.6276

MSS Mechanical Service & Systems, Inc.
1055 South 700 West
Salt Lake City, UT 84104
801-255-9333

SMD ENGINEERING, PLLC
"Engineered Mechanical Solutions"
986 WEST ATHERTON DRIVE, SUITE 200
TAYLORSVILLE, UTAH 84123
(801) 268-3826, FAX (801) 268-3297
WWW.SMDENGINEERING.COM

No.	Description	Date
1	CODE REVIEW	08/16/2017
##		##XX/####
##		##XX/####
##		##XX/####
##		##XX/####
##		##XX/####
##		##XX/####
##		##XX/####
##		##XX/####
##		##XX/####
##		##XX/####
Revision:		

NOTES:

COPYRIGHT RELATED TO THE USE OF THIS DRAWING:
The use of this drawing shall be governed by standard copyright law as generally accepted in architectural practice.

ARCHITECT'S REQUIREMENTS AND APPROVALS:
It is the Builder's responsibility to notify MacKay-Lyons Sweetapple Architects Ltd. and to seek prior written approval for materials and workmanship which deviates from instructions provided by the Architect.

ENGINEER'S REQUIREMENTS AND APPROVALS:
It is the Builder's responsibility to notify MacKay-Lyons Sweetapple Architects Ltd. and to seek prior written approval for materials and workmanship which deviates from instructions provided by the Engineer.

AUTHORITIES' REQUIREMENTS AND APPROVALS:
All materials and workmanship must comply with the requirements of all authorities having jurisdication over the work. It is the Builder's responsibility to gain necessary approval from all relevant Authorities.

DIMENSIONS:
All dimensions must be verified on site. Do not scale off drawings. Plans take precedent over elevations. In the absence of dimensions, or if discrepancies exist, consult Architect. All minimum dimensions are to comply with the National Building Code of Canada.

SHOP DRAWINGS:
Submit shop drawings to the Architect and Engineer for approval prior to manufacture of prefabricated elements of the building.

PLAN REVIEW ACCEPTANCE
FOR COMPLIANCE WITH THE APPLICABLE CONSTRUCTION CODES IDENTIFIED BELOW.

☒ BUILDING	☒ STRUCTURAL
☒ MECHANICAL	☒ PLUMBING
☒ ELECTRICAL	☒ ENERGY
☐ ACCESSIBILITY	☐ FIRE

PLAN REVIEW ACCEPTANCE OF DOCUMENTS DOES NOT AUTHORIZE CONSTRUCTION TO PROCEED IN VIOLATION OF ANY FEDERAL, STATE, OR LOCAL REGULATIONS.

BY: MEM DATE: 08/24/17

WEST COAST CODE CONSULTANTS, INC.

MECHANICAL FLOOR PLANS

scale: AS NOTED
date: 03/13/2017
drawn: STAFF
chk'd: SMD

MH101

permit set - march 13, 2017

THIS DRAWING, AS AN INSTRUMENT OF SERVICE, IS AND SHALL REMAIN THE PROPERTY OF SMD ENGINEERING, PLLC. THE INFORMATION, DESIGN, OR CONCEPTS REPRESENTED ON THIS DRAWING ARE CONFIDENTIAL AND ARE NOT FOR GENERAL DISTRIBUTION. © SMD ENGINEERING, PLLC 2016
WITHOUT THE PERMISSION OF SMD ENGINEERING, PLLC AND SHALL NOT BE REPRODUCED, PUBLISHED, OR USED IN ANY WAY

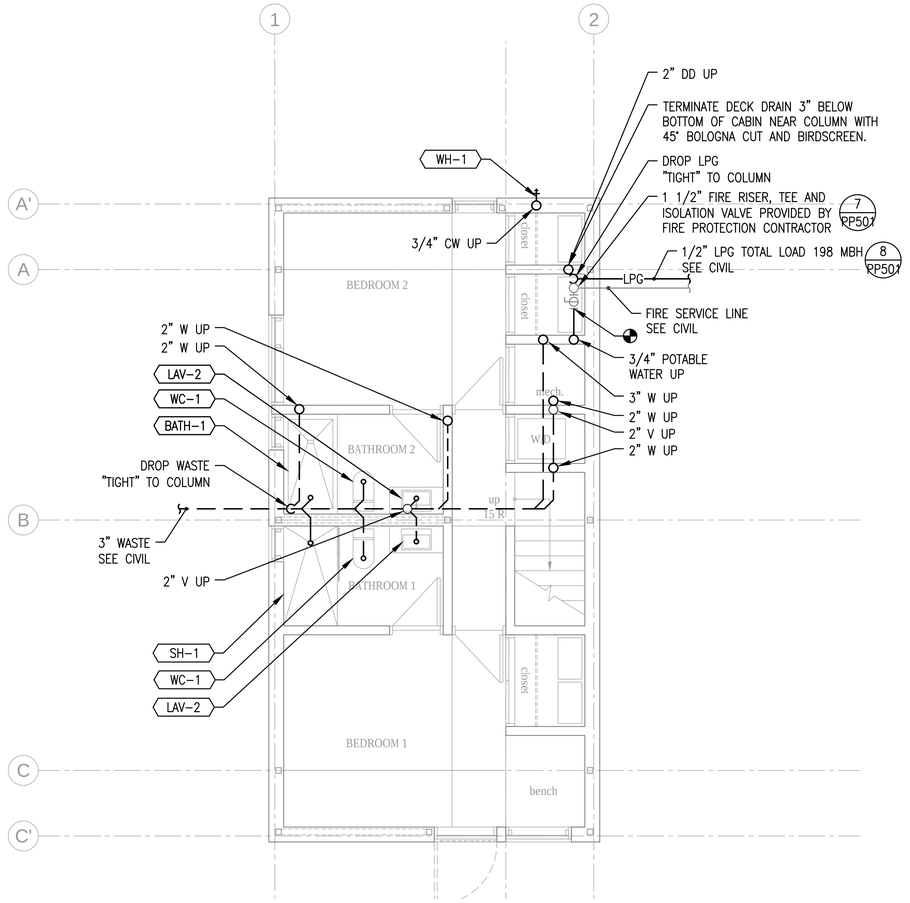

1 / PP100 — 1000 SF - PLUMB LOWER FP - BELOW FLOOR

BUILDINGS 13, 16, 19, 26, 27

4' 2' 1' 0 4' 8'

SCALE: 1/4" = 1'-0"

NORTH

Horizon Neighborhood
CABINS

7758 E. Horizon Run
Summit Powder Mountain
Eden, Utah

MacKay-Lyons Sweetapple Architects Limited

2188 Gottingen St.
Halifax, Nova Scotia
Canada B3K 3B4

ph: (902) 429.1867
fax: (902) 429.6276

Mechanical Service & Systems, Inc.
1055 South 700 West
Salt Lake City, UT 84104
801-255-9333

SMD ENGINEERING, PLLC
"Engineered Mechanical Solutions"
986 WEST ATHERTON DRIVE, SUITE 200
TAYLORSVILLE, UTAH 84123
(801) 268-3826, FAX (801) 268-3297
WWW.SMDENGINEERING.COM

No.	Description	Date
1	CODE REVIEW	08/16/2017
##		##XX/####
##		##XX/####
##		##XX/####
##		##XX/####
##		##XX/####
##		##XX/####
##		##XX/####
##		##XX/####
##		##XX/####
Revision:		

NOTES:

COPYRIGHT RELATED TO THE USE OF THIS DRAWING:
The use of this drawing shall be governed by standard copyright law as generally accepted in architectural practice.

ARCHITECT'S REQUIREMENTS AND APPROVALS:
It is the Builder's responsibility to notify MacKay-Lyons Sweetapple Architects Ltd. and to seek prior written approval for materials and workmanship which deviates from instructions provided by the Architect.

ENGINEER'S REQUIREMENTS AND APPROVALS:
It is the Builder's responsibility to notify MacKay-Lyons Sweetapple Architects Ltd. and to seek prior written approval for materials and workmanship which deviates from instructions provided by the Engineer.

AUTHORITIES' REQUIREMENTS AND APPROVALS:
All materials and workmanship must comply with the requirements of all authorities having jurisdication over the work. It is the Builder's responsibility to gain necessary approval from all relevant Authorities.

DIMENSIONS:
All dimensions must be verified on site. Do not scale off drawings. Plans take precedent over elevations. In the absence of dimensions, or if discrepancies exist, consult Architect. All minimum dimensions are to comply with the National Building Code of Canada.

SHOP DRAWINGS:
Submit shop drawings to the Architect and Engineer for approval prior to manufacture of prefabricated elements of the building.

PLAN REVIEW ACCEPTANCE

FOR COMPLIANCE WITH THE APPLICABLE CONSTRUCTION CODES IDENTIFIED BELOW.

- [X] BUILDING
- [X] MECHANICAL
- [X] ELECTRICAL
- [ ] ACCESSIBILITY
- [X] STRUCTURAL
- [X] PLUMBING
- [X] ENERGY
- [ ] FIRE

PLAN REVIEW ACCEPTANCE OF DOCUMENTS DOES NOT AUTHORIZE CONSTRUCTION TO PROCEED IN VIOLATION OF ANY FEDERAL, STATE, OR LOCAL REGULATIONS.

BY: MEM DATE: 08/24/17

WEST COAST CODE CONSULTANTS, INC.

PLUMBING LOWER FLOOR PLAN - BELOW FLOOR

scale: AS NOTED
date: 03/13/2017
drawn: STAFF
chk'd: SMD

PP100

permit set - march 13, 2017

THIS DRAWING, AS AN INSTRUMENT OF SERVICE, IS AND SHALL REMAIN THE PROPERTY OF SMD ENGINEERING, PLLC. THE INFORMATION, DESIGN, OR CONCEPTS REPRESENTED ON THIS DRAWING ARE CONFIDENTIAL AND ARE NOT FOR GENERAL DISTRIBUTION. © SMD ENGINEERING, PLLC 2016
THE PERMISSION OF SMD ENGINEERING, PLLC AND SHALL NOT BE REPRODUCED, PUBLISHED, OR USED IN ANY WAY WITHOUT

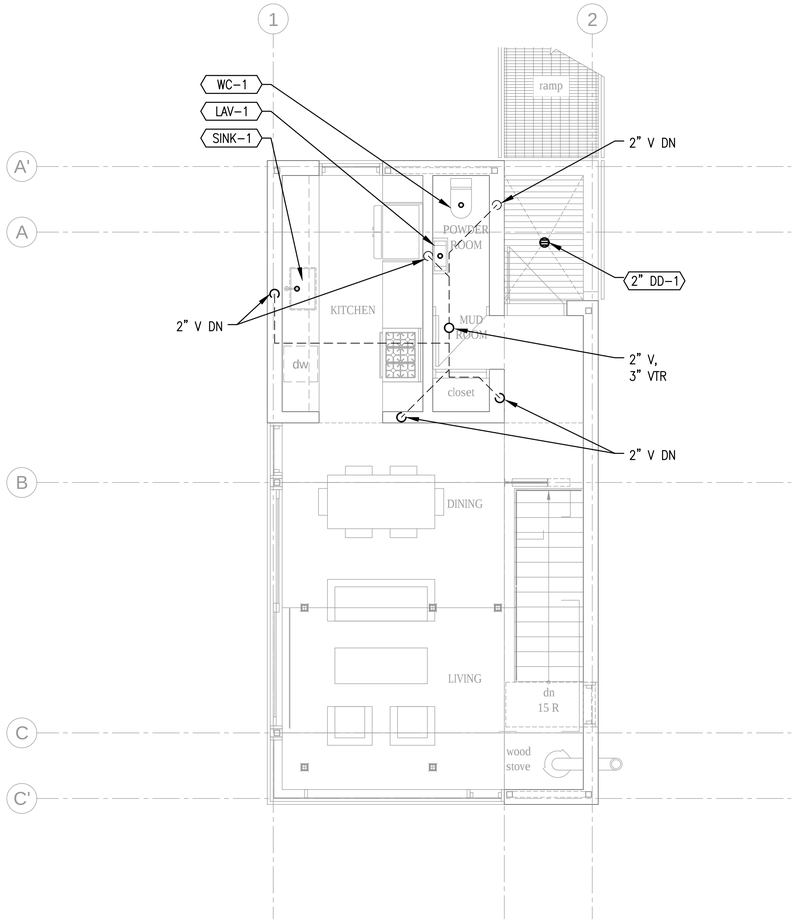

2 PP101 — 1000 SF - PLUMBING MAIN FLOOR PLAN - WASTE AND VENT — BUILDINGS 13, 16, 19, 26, 27

NORTH

4' 2' 1' 0 4' 8'

SCALE: 1/4" = 1'–0"

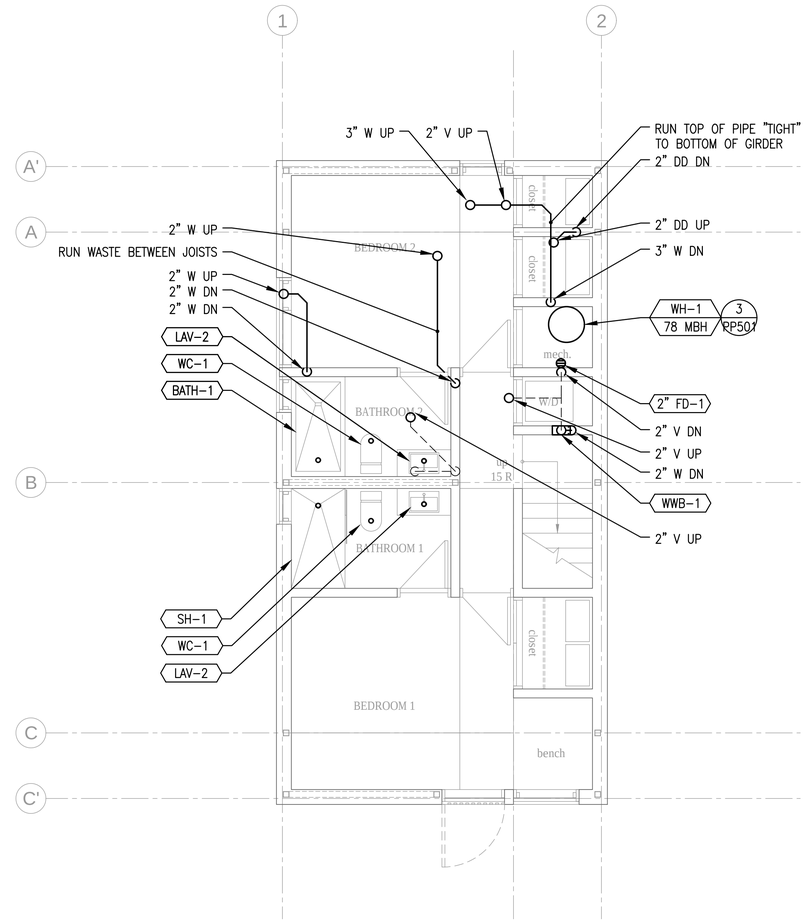

1 PP101 — 1000 SF - PLUMB LOWER FP - ABOVE FLOOR - WASTE AND VENT — BUILDINGS 13, 16, 19, 26, 27

NORTH

4' 2' 1' 0 4' 8'

SCALE: 1/4" = 1'–0"

Horizon Neighborhood
CABINS

7758 E. Horizon Run
Summit Powder Mountain
Eden, Utah

MacKay-Lyons Sweetapple Architects Limited

2188 Gottingen St.
Halifax, Nova Scotia
Canada B3K 3B4

ph: (902) 429.1867
fax: (902) 429.6276

MSS Mechanical Service & Systems, Inc.
1055 South 700 West
Salt Lake City, UT 84104
801-255-9333

SMD ENGINEERING, PLLC
"Engineered Mechanical Solutions"
986 WEST ATHERTON DRIVE, SUITE 200
TAYLORSVILLE, UTAH 84123
(801) 268-3826, FAX (801) 268-3297
WWW.SMDENGINEERING.COM

No.	Description	Date
1	CODE REVIEW	08/16/2017
##		##XX/####
##		##XX/####
##		##XX/####
##		##XX/####
##		##XX/####
##		##XX/####
##		##XX/####
##		##XX/####
##		##XX/####
Revision:		

NOTES:

COPYRIGHT RELATED TO THE USE OF THIS DRAWING:
The use of this drawing shall be governed by standard copyright law as generally accepted in architectural practice.

ARCHITECT'S REQUIREMENTS AND APPROVALS:
It is the Builder's responsibility to notify MacKay-Lyons Sweetapple Architects Ltd. and to seek prior written approval for materials and workmanship which deviates from instructions provided by the Architect.

ENGINEER'S REQUIREMENTS AND APPROVALS:
It is the Builder's responsibility to notify MacKay-Lyons Sweetapple Architects Ltd. and to seek prior written approval for materials and workmanship which deviates from instructions provided by the Engineer.

AUTHORITIES' REQUIREMENTS AND APPROVALS:
All materials and workmanship must comply with the requirements of all authorities having jurisdication over the work. It is the Builder's responsibility to gain necessary approval from all relevant Authorities.

DIMENSIONS:
All dimensions must be verified on site. Do not scale off drawings. Plans take precedent over elevations. In the absence of dimensions, or if discrepancies exist, consult Architect. All minimum dimensions are to comply with the National Building Code of Canada.

SHOP DRAWINGS:
Submit shop drawings to the Architect and Engineer for approval prior to manufacture of prefabricated elements of the building.

PLAN REVIEW ACCEPTANCE
FOR COMPLIANCE WITH THE APPLICABLE CONSTRUCTION CODES IDENTIFIED BELOW.

☒ BUILDING	☒ STRUCTURAL
☒ MECHANICAL	☒ PLUMBING
☒ ELECTRICAL	☒ ENERGY
☐ ACCESSIBILITY	☐ FIRE

PLAN REVIEW ACCEPTANCE OF DOCUMENTS DOES NOT AUTHORIZE CONSTRUCTION TO PROCEED IN VIOLATION OF ANY FEDERAL, STATE, OR LOCAL REGULATIONS.

BY MEM DATE 08/24/17

WEST COAST CODE CONSULTANTS, INC.

PLUMBING FLOOR PLANS - WASTE AND VENT

scale: AS NOTED
date: 03/13/2017
drawn: STAFF
chk'd: SMD

PP101

permit set - march 13, 2017

THIS DRAWING, AS AN INSTRUMENT OF SERVICE, IS AND SHALL REMAIN THE PROPERTY OF SMD ENGINEERING, PLLC. THE INFORMATION, DESIGN, OR CONCEPTS REPRESENTED ON THIS DRAWING ARE CONFIDENTIAL AND ARE NOT FOR GENERAL DISTRIBUTION. © SMD ENGINEERING, PLLC 2016
WITHOUT THE PERMISSION OF SMD ENGINEERING, PLLC AND SHALL NOT BE REPRODUCED, PUBLISHED, OR USED IN ANY WAY WITHOUT THE P

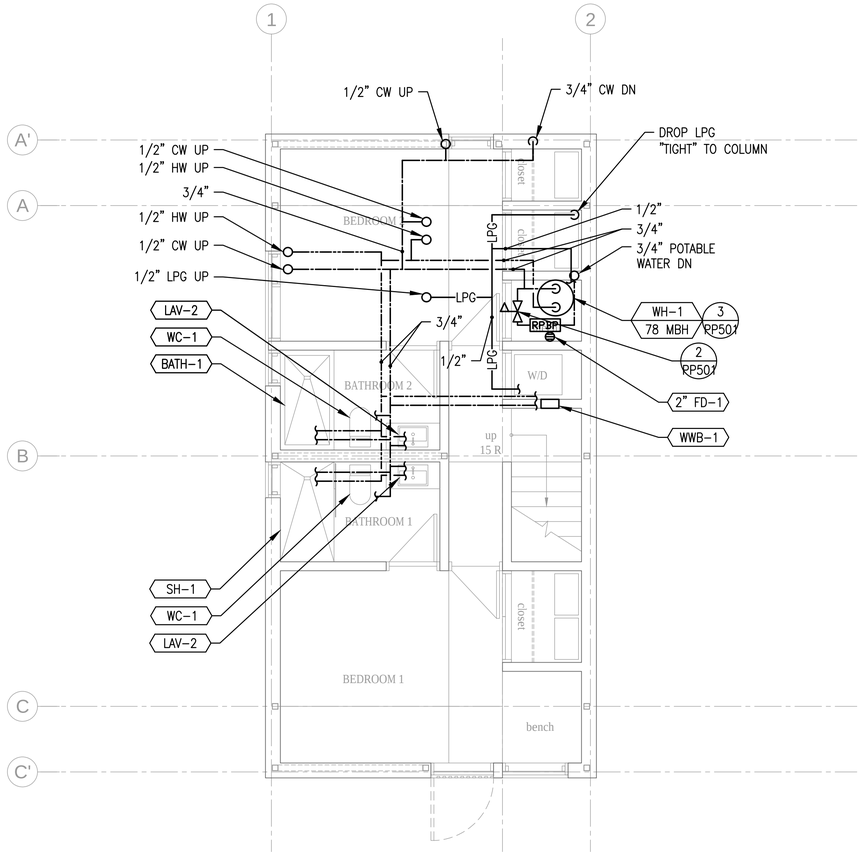

1 PP102 — 1000 SF - PLUMBING LOWER FLOOR PLAN - DOMESTIC — BUILDINGS 13, 16, 19, 26, 27

NORTH

4' 2' 1' 0 4' 8'

SCALE: 1/4" = 1'-0"

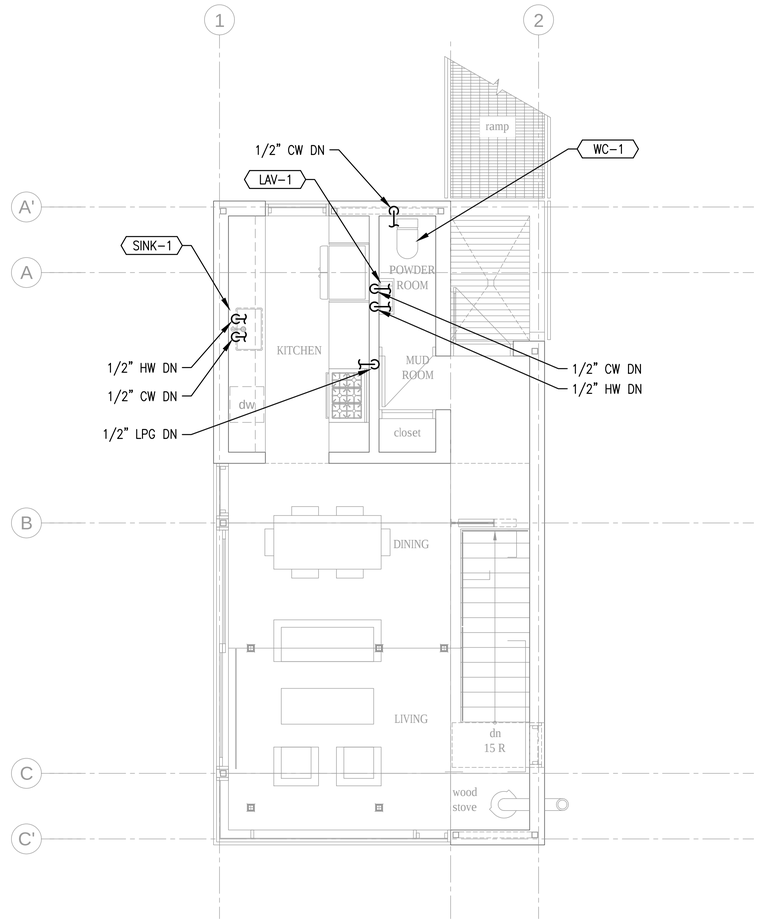

2 PP102 — 1000 SF - PLUMBING MAIN FLOOR PLAN - DOMESTIC — BUILDINGS 13, 16, 19, 26, 27

NORTH

4' 2' 1' 0 4' 8'

SCALE: 1/4" = 1'-0"

PLAN REVIEW ACCEPTANCE

FOR COMPLIANCE WITH THE APPLICABLE CONSTRUCTION CODES IDENTIFIED BELOW.

☒ BUILDING	☒ STRUCTURAL
☒ MECHANICAL	☒ PLUMBING
☒ ELECTRICAL	☒ ENERGY
☐ ACCESSIBILITY	☐ FIRE

PLAN REVIEW ACCEPTANCE OF DOCUMENTS DOES NOT AUTHORIZE CONSTRUCTION TO PROCEED IN VIOLATION OF ANY FEDERAL, STATE, OR LOCAL REGULATIONS.

BY: MEM DATE: 08/24/17

WEST COAST CODE CONSULTANTS, INC.

Horizon Neighborhood
CABINS

7758 E. Horizon Run
Summit Powder Mountain
Eden, Utah

MacKay-Lyons
Sweetapple

Architects
Limited

2188 Gottingen St,
Halifax, Nova Scotia
Canada B3K 3B4

ph: (902) 429.1867
fax: (902) 429.6276

Mechanical Service & Systems, Inc.
1055 South 700 West
Salt Lake City, UT 84104
801-255-9333

SMD ENGINEERING, PLLC
"Engineered Mechanical Solutions"
986 WEST ATHERTON DRIVE, SUITE 200
TAYLORSVILLE, UTAH 84123
(801) 268-3828, FAX (801) 268-3297
WWW.SMDENGINEERING.COM

No.	Description	Date
1	CODE REVIEW	08/16/2017
##		##XX/####
##		##XX/####
##		##XX/####
##		##XX/####
##		##XX/####
##		##XX/####
##		##XX/####
##		##XX/####
##		##XX/####
Revision:		

NOTES:

COPYRIGHT RELATED TO THE USE OF THIS DRAWING:
The use of this drawing shall be governed by standard copyright law as generally accepted in architectural practice.

ARCHITECT'S REQUIREMENTS AND APPROVALS:
It is the Builder's responsibility to notify MacKay-Lyons Sweetapple Architects Ltd. and to seek prior written approval for materials and workmanship which deviates from instructions provided by the Architect.

ENGINEER'S REQUIREMENTS AND APPROVALS:
It is the Builder's responsibility to notify MacKay-Lyons Sweetapple Architects Ltd. and to seek prior written approval for materials and workmanship which deviates from instructions provided by the Engineer.

AUTHORITIES' REQUIREMENTS AND APPROVALS:
All materials and workmanship must comply with the requirements of all authorities having jurisdiction over the work. It is the Builder's responsibility to gain necessary approval from all relevant Authorities.

DIMENSIONS:
All dimensions must be verified on site. Do not scale off drawings. Plans take precedent over elevations. In the absence of dimensions, or if discrepancies exist, consult Architect. All minimum dimensions are to comply with the National Building Code of Canada.

SHOP DRAWINGS:
Submit shop drawings to the Architect and Engineer for approval prior to manufacture of prefabricated elements of the building.

PLUMBING FLOOR PLANS - DOMESTIC

scale: AS NOTED
date: 03/13/2017
drawn: STAFF
chk'd: SMD

PP102

permit set - march 13, 2017

THIS DRAWING, AS AN INSTRUMENT OF SERVICE, IS AND SHALL REMAIN THE PROPERTY OF SMD ENGINEERING, PLLC. THE INFORMATION, DESIGN, OR CONCEPTS REPRESENTED ON THIS DRAWING ARE CONFIDENTIAL AND ARE NOT FOR GENERAL DISTRIBUTION. © SMD ENGINEERING, PLLC 2016

1 PP501 CEILING EXHAUST FAN

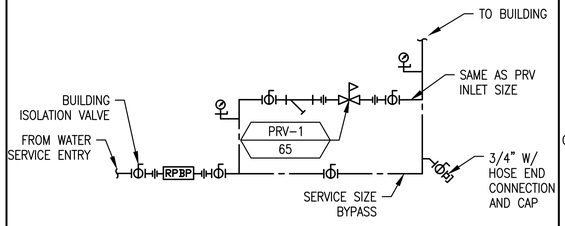

2 PP501 PRESSURE REDUCING STATION

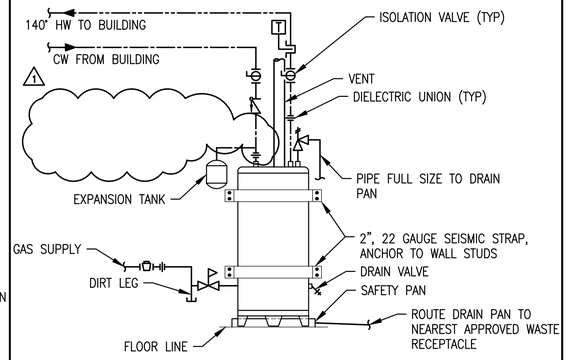

3 PP501 GAS FIRED WATER HEATER

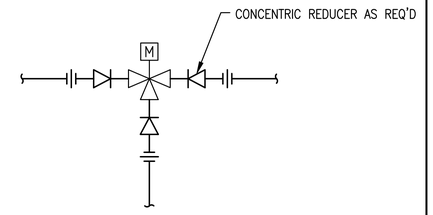

4 PP501 MOTORIZED 3-WAY VALVE

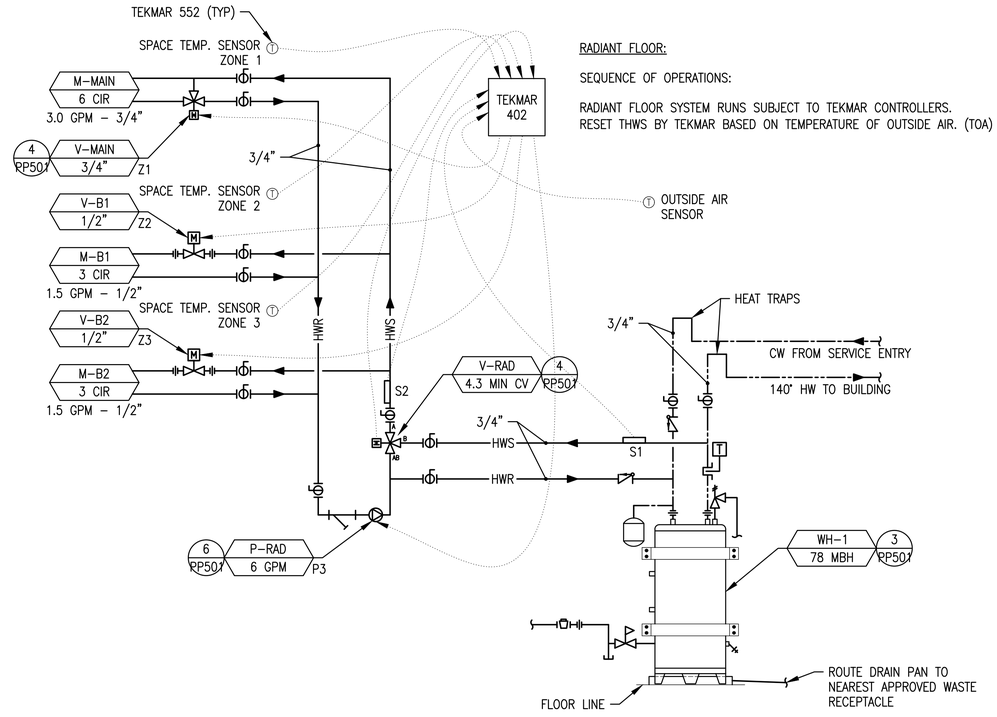

RADIANT FLOOR:

SEQUENCE OF OPERATIONS:

RADIANT FLOOR SYSTEM RUNS SUBJECT TO TEKMAR CONTROLLERS. RESET THWS BY TEKMAR BASED ON TEMPERATURE OF OUTSIDE AIR. (TOA)

5 PP501 HEATING WATER DIAGRAM

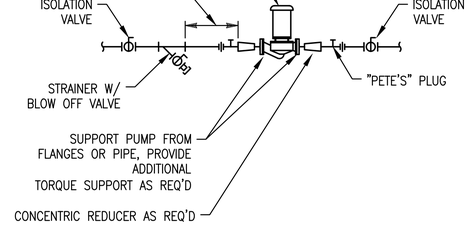

6 PP501 PUMP

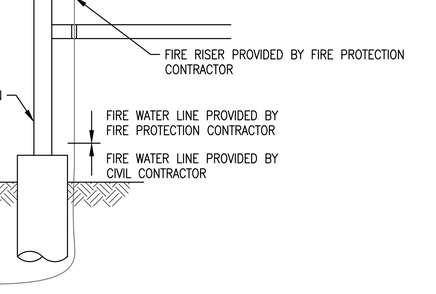

7 PP501 WATER SERVICE ENTRANCE

DESIGN CRITERIA

DESIGN LENGTH: 300'-0"
SYSTEM PRESSURE: 2 LB W/
1.0 LBS PRESSURE DROP
REGULATORS: 2 LB TO 11" WC

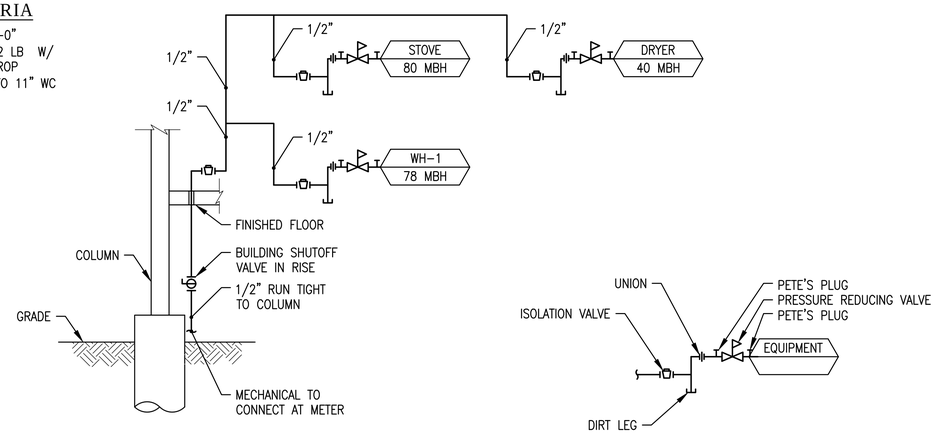

8 PP501 LIQUID PETROLEUM GAS (LPG) PIPING DIAGRAM

Horizon Neighborhood
CABINS

7758 E. Horizon Run
Summit Powder Mountain
Eden, Utah

MacKay-Lyons
Sweetapple

Architects
Limited

2188 Gottingen St.
Halifax, Nova Scotia
Canada B3K 3B4

ph: (902) 429.1867
fax: (902) 429.6276

MSS
Mechanical Service & Systems, Inc.
1055 South 700 West
Salt Lake City, UT 84104
801-255-9333

SMD ENGINEERING, PLLC
"Engineered Mechanical Solutions"
986 WEST ATHERTON DRIVE, SUITE 200
TAYLORSVILLE, UTAH 84123
(801) 268-3828, FAX (801) 268-3297
WWW.SMDENGINEERING.COM

PLAN REVIEW ACCEPTANCE
FOR COMPLIANCE WITH THE APPLICABLE CONSTRUCTION CODES IDENTIFIED BELOW.

[X] BUILDING	[X] STRUCTURAL
[X] MECHANICAL	[X] PLUMBING
[X] ELECTRICAL	[X] ENERGY
[ ] ACCESSIBILITY	[ ] FIRE

PLAN REVIEW ACCEPTANCE OF DOCUMENTS DOES NOT AUTHORIZE CONSTRUCTION TO PROCEED IN VIOLATION OF ANY FEDERAL, STATE, OR LOCAL REGULATIONS.

BY: MEM DATE: 08/24/17

WEST COAST CODE CONSULTANTS, INC.

No.	Description	Date
1	CODE REVIEW	08/16/2017
##		##XX/####
##		##XX/####
##		##XX/####
##		##XX/####
##		##XX/####
##		##XX/####
##		##XX/####
##		##XX/####
##		##XX/####
##		##XX/####

Revision:

NOTES:

COPYRIGHT RELATED TO THE USE OF THIS DRAWING:
The use of this drawing shall be governed by standard copyright law as generally accepted in architectural practice.

ARCHITECT'S REQUIREMENTS AND APPROVALS:
It is the Builder's responsibility to notify MacKay-Lyons Sweetapple Architects Ltd. and to seek prior written approval for materials and workmanship which deviates from instructions provided by the Architect.

ENGINEER'S REQUIREMENTS AND APPROVALS:
It is the Builder's responsibility to notify MacKay-Lyons Sweetapple Architects Ltd. and to seek prior written approval for materials and workmanship which deviates from instructions provided by the Engineer.

AUTHORITIES' REQUIREMENTS AND APPROVALS:
All materials and workmanship must comply with the requirements of all authorities having jurisdiction over the work. It is the Builder's responsibility to gain necessary approval from all relevant Authorities.

DIMENSIONS:
All dimensions must be verified on site. Do not scale off drawings. Plans take precedent over elevations. In the absence of dimensions, or if discrepancies exist, consult Architect. All minimum dimensions are to comply with the National Building Code of Canada.

SHOP DRAWINGS:
Submit shop drawings to the Architect and Engineer for approval prior to manufacture of prefabricated elements of the building.

PLUMBING DETAILS

scale: AS NOTED
date: 03/13/2017
drawn: STAFF
chk'd: SMD

PP501

permit set - march 13, 2017

THIS DRAWING, AS AN INSTRUMENT OF SERVICE, IS AND SHALL REMAIN THE PROPERTY OF SMD ENGINEERING, PLLC AND SHALL NOT BE REPRODUCED, PUBLISHED, OR USED IN ANY WAY WITHOUT THE PERMISSION OF SMD ENGINEERING, PLLC. THE INFORMATION, DESIGN, OR CONCEPTS REPRESENTED ON THIS DRAWING ARE CONFIDENTIAL AND ARE NOT FOR GENERAL DISTRIBUTION. © SMD ENGINEERING, PLLC 2016

PUMP SCHEDULE (P)

P / GPM

MARK	SYSTEM SERVED	TYPE	GPM	HEAD FT WC	GLYCOL %	MOTOR				MANUFACTURER MODEL	REMARKS
						RPM	BHP	HP	VOLT/ PHASE		
P-RAD	RADIANT FLOOR	BOOSTER	6	18	POTABLE	N/A	87 WATTS	N/A	120/ 1ø	GRUNDFOS UPS 15-58 FC	W/ BRONZE CASING

PRV SCHEDULE (PRV)

PRV / GPM

MARK	SIZE	GPM	PD PSI	SETTING	MANUFACTURER MODEL
PRV-1	3/4	20	10	65	WATTS LFN45B

PIPING LEGEND

SYSTEM	SIZE	MATERIAL	INSULATION	FITTINGS
UNDERGROUND WASTE AND VENT	ALL	SCHEDULE 40 PVC SOLID CORE	N/A	SOLVENT WELD FITTINGS
UNDERGROUND WASTE AND VENT	ALL	ABS	N/A	SOLVENT WELD FITTINGS
ABOVE GROUND WASTE AND VENT	ALL	NO HUB CAST IRON	N/A	NO HUB CAST IRON
ABOVE GROUND WASTE AND VENT	ALL	ABS/SCHEDULE 40 PVC SOLID CORE	N/A	SOLVENT WELD FITTINGS
DOMESTIC HOT AND RECIRC	ALL	TYPE "L" COPPER	1" FIBERGLASS	PRO-PRESS FITTINGS
DOMESTIC HOT AND RECIRC	ALL	PEX-A	1" FIBERGLASS	MANUFACTURER'S FITTINGS
DOMESTIC COLD	ALL	TYPE "L" COPPER	N/A	PRO-PRESS FITTINGS
DOMESTIC COLD	ALL	PEX-A	N/A	MANUFACTURER'S FITTINGS
ABOVE GROUND HEATING WATER	2 1/2" – 4"	SCHEDULE 40 STEEL	1" FIBERGLASS	WELDED OR GROVED FITTINGS
ABOVE GROUND HEATING WATER	1/2" – 2"	SCHEDULE 40 STEEL	1" FIBERGLASS	MEGA-PRESS OR THREADED FITTINGS
ABOVE GROUND HEATING WATER	ALL	PEX-A W/ OXYGEN BARRIER	1" FIBERGLASS	MANUFACTURER'S FITTINGS
ABOVE GROUND HEATING WATER	2 1/2" – 4"	TYPE "L" COPPER	1" FIBERGLASS	PROPRESS FITTINGS
ABOVE GROUND HEATING WATER	1 1/4" – 2"	TYPE "L" COPPER	1" FIBERGLASS	PROPRESS FITTINGS
ABOVE GROUND HEATING WATER	1/2" – 1"	TYPE "L" COPPER	1" FIBERGLASS	PROPRESS FITTINGS

NEW VALVE SCHEDULE (V)

V / SIZE

MARK	SYSTEM SERVED	FLOW GPM	CONFIG.	CONNECTION SIZE	REMARKS
V-RAD	RADIANT FLOOR SYSTEM	6	3-WAY	3/4"	4.3 MINIMUM CV
V-MAIN	RADIANT FLOOR ZONE MAIN	3	3-WAY	3/4"	
V-B1	RADIANT FLOOR MANIFOLD B1	1.5	2-WAY	1/2"	
V-B2	RADIANT FLOOR MANIFOLD B2	1.5	2-WAY	1/2"	

PLUMBING FIXTURE SCHEDULE

FIXTURE

MARK	FIXTURE	ROUGH IN SIZE					MANUFACTURER MODEL	REMARKS
		WASTE IN	TRAP IN	VENT IN	HW IN	CW IN		
WC-1	WATER CLOSET, FLOOR MOUNTED, TANK TYPE	3	2	2	N/A	1/2	DURAVIT 2125010000 STARCK 3	WHITE VITREOUS CHINA, TWO-PIECE TOILET, 1.28 GPF, 12" ROUGH-IN, 3" FLUSH VALVE, 15-3/4" FLOOR TO RIM, ELONGATED BOWL, W/ DURAVIT SEAT AND COVER #006339..00, CHROMED QUARTER TURNED ANGLE STOP AND CHROMED BRASS SUPPLY.
LAV-1	LAVATORY AND FAUCET	2	1 1/4	2	1/2	1/2	DURAVIT 070350.00 LAVATORY WITH HANGSGROHE 32146001 FAUCET	VITREOUS CHINA, 19 5/8" X 9 7/8" X 4-1/8"D, SINGLE CONTROL FAUCET, CHROMED QUARTER TURNED ANGLE STOPS, CHROMED BRASS SUPPLIES, CHROMED BRASS "P" TRAP, AND ASSE 1070 COMPLIANT WATER TEMPERATURE LIMITING DEVICE, SET TO 110°F.
LAV-2	UNDERCOUNTER BASIN AND SINGLE CONTROL FAUCET	2	1 1/4	2	1/2	1/2	DURAVIT 033048.00 LAVATORY WITH HANGSGROHE 32146001 FAUCET	VITREOUS CHINA, 19 1/8" X 12 3/8" X 6-1/4"D, SINGLE CONTROL FAUCET, CHROMED QUARTER TURNED ANGLE STOPS, CHROMED BRASS SUPPLIES, CHROMED BRASS "P" TRAP, AND ASSE 1070 COMPLIANT WATER TEMPERATURE LIMITING DEVICE, SET TO 110°F.
BATH-1	RECTANGLE TUB WITH FAUCET	2	2	2	1/2	1/2	KOHLER K-1130 BATH WITH HANGSGROHE 38410001 FAUCET	RECTANGLE 5'-0", DROP-IN INSTALLATION, ARCHER BATH DRAIN K-7272, CHROMED QUARTER TURNED ANGLE STOPS, CHROMED BRASS SUPPLIES, CHROMED BRASS "P" TRAP, ASSE 1070 COMPLIANT WATER TEMPERATURE LIMITING DEVICE, SET TO 110°F.
SH-1	SHOWER VALVE	2	2	2	1/2	1/2	HANSGROHE ECOSTAT S PRESSURE BALANCE TRIM WITH DIVERTER AND RAINDANCE S 150 AIR 3-JET SHOEWRHEAD	PRESSURE BALANCED SHOWER VALVE W/INTEGRAL SERVICE STOPS, 4.5 GPM, TEMPERATURE AND ON/OFF CONTROLS FOR 2 OUTLETS, REQUIRED ACCESSORIES: IBOX UNIVERSAL PLUS ROUGH WITH SERVICE STOPS. RAINDANCE S 150 AIR 3-JET SHOWERHEAD, SHOWERHEAD FLOW 2.5 GPM, STANDARD SHOWERARM 6" AND ASSE 1070 COMPLIANT WATER TEMPERATURE LIMITING DEVICE, SET TO 110°F.
SINK-1	SINK, SINGLE COMPARTMENT, STAINLESS STEEL, UNDER COUNTER MOUNTED, W/ GOOSENECK FAUCET AND DISPOSAL	2	1 1/2	2	1/2	1/2	FRANKE FCUX11027 HANSGROHE TALIS S FAUCET IN-SINK-ERATOR BADGER 5 DISPOSAL	STAINLESS STEEL UNDER COUNTER SINK, GOOSENECK FAUCET, CHROMED QUARTER TURNED ANGLE STOPS, CHROMED BRASS SUPPLIES, CHROMED BRASS "P" TRAP. INSINKERATOR MODEL BADGER 5 W/ 1/2 HP, 120 VOLT, SINGLE PHASE DISPOSAL MOTOR AND 36" POWER CHORD W/ 3 PRONG PLUG. PROVIDE DISHWASHER CONNECTION AND HW QUARTER TURNED BALL VALVE STOP, AND ASSE 1070 COMPLIANT WATER TEMPERATURE LIMITING DEVICE, SET TO 110°F.
ICE-1	ICE WALL BOX	N/A	N/A	N/A	N/A	1/2	OATEY 039136	NO LEAD, 4X4 PLASTIC OUTLET BOX OUTLET BOX AND QUARTER TURNED ANGLE STOP.
WWB-1	WASHING MACHINE WALL BOX	2	2	2	1/2	1/2	IPS I82056	NO LEAD, WASHING MACHINE OUTLET BOX W/ MINI-RESTER WATER HAMMER ARRESTERS.
WH-1	NON-FREEZE WALL HYDRANT	N/A	N/A	N/A	N/A	3/4	WOODFORD MODEL 17	EXPOSED ANTI-SYPHON NON-FREEZE WALL HYDRANT W/ INTEGRAL BACK FLOW PREVENTER OPERATOR, 3/4" MALE HOSE CONNECTION AND POLISHED BRONZE FINISH.
FD-1	FLOOR DRAIN	X	X	X/2 2" MIN	N/A	N/A	PROFLO PF42800	CAST IRON BODY, ADJUSTABLE NICKEL BRONZE STRAINER ASSEMBLY, MEMBRANE CLAMP, WEEP HOLES, AND TRAP PRIMER CONNECTION.
DD-1	DECK DRAIN	X	N/A	N/A	N/A	N/A	ZURN RD2120-AB2-C	ABS BODY COMPLETE WITH STEEL-THREADED INSERTS FOR INCREASED STRENGTH AND LONGEVITY. STANDARD TO THE ABS ROOF DRAIN IS A CAST IRON CLAMP DEVICE WITH AN INTEGRAL GRAVEL GUARD. REMOVE DOME STRAINER. INSTALL WATERPROOF MEMBRANE.

LPG FIRED WATER HEATER SCHEDULE (WH)

WH / GAL

MARK	INPUT MBH	OUT. MBH	EFF. %	FUEL	TANK GAL	REC. GPH	TEMP. RISE °F	OPER. TEMP. °F	FLUE		DIMENSIONS			ELECTRICAL		MANUFACTURER MODEL	REMARKS
									D IN	TYPE	D IN	H IN	WT LBS	VOLT/ PHASE	AMP		
WH-1	78	63	80	LPG	55	84	90	140	4	TYPE "B"	22	60	650	N/A	N/A	BRADFORDWHITE RG155H6X	W/ AMTROL ST-5-C EXPANSION TANK

EXHAUST FAN SCHEDULE (EF)

EF / CFM

MARK	AREA SERVED	TYPE	CFM	ESP (IN WC)	FAN RPM	MOTOR				SONES	DAMPER	CONTROL	OPENING SIZE IN	MANUFACTURER MODEL	REMARKS
						RPM	BHP	HP	VOLT /PHASE						
EF-1	BATHROOM 1	CEILING	75	0.5	1200	1200	69 WATT	N/A	120/1ø	3.9	GRAVITY	WALL SWITCH	N/A	COOK GC-162	NOTE 1
EF-2	BATHROOM 2	CEILING	75	0.5	1200	1200	69 WATT	N/A	120/1ø	3.9	GRAVITY	WALL SWITCH	N/A	COOK GC-162	NOTE 1
EF-3	POWDER ROOM	CEILING	75	0.5	1200	1200	69 WATT	N/A	120/1ø	3.9	GRAVITY	WALL SWITCH	N/A	COOK GC-162	NOTE 1

NOTE 1: PROVIDE 6" PAINTABLE WALL CAP WITH INTEGRAL BACKDRAFT DAMPER.

MANIFOLD SCHEDULE (M)

M / GPM

MARK	SYSTEM SERVED	GPM/CIRC	FLOW GPM	CIRCUITS/ SIZE
M-MAIN	MAIN FLOOR	0.5	3	6 – 3/4"
M-BD1	BEDROOM 1	0.5	1.5	3 – 3/4"
M-BD2	BEDROOM 2	0.5	1.5	3 – 3/4"

permit set - march 13, 2017

Horizon Neighborhood
CABINS

7758 E. Horizon Run
Summit Powder Mountain
Eden, Utah

MacKay-Lyons
Sweetapple

Architects
Limited

2188 Gottingen St.
Halifax, Nova Scotia
Canada B3K 3B4

ph: (902) 429.1867
fax: (902) 429.6276

MSS
Mechanical Service & Systems, Inc.
1055 South 700 West
Salt Lake City, UT 84104
801-255-9333

SMD ENGINEERING, PLLC
"Engineered Mechanical Solutions"
986 WEST ATHERTON DRIVE, SUITE 200
TAYLORSVILLE, UTAH 84123
(801) 268-3828, FAX (801) 268-3297
WWW.SMDENGINEERING.COM

PLAN REVIEW ACCEPTANCE
FOR COMPLIANCE WITH THE APPLICABLE CONSTRUCTION CODES IDENTIFIED BELOW.
☒ BUILDING ☒ STRUCTURAL
☒ MECHANICAL ☒ PLUMBING
☒ ELECTRICAL ☒ ENERGY
☐ ACCESSIBILITY ☐ FIRE
PLAN REVIEW ACCEPTANCE OF DOCUMENTS DOES NOT AUTHORIZE CONSTRUCTION TO PROCEED IN VIOLATION OF ANY FEDERAL, STATE, OR LOCAL REGULATIONS.
BY: MEM DATE: 08/24/17
WEST COAST CODE CONSULTANTS, INC.

No.	Description	Date
1	CODE REVIEW	08/16/2017
##		##XXX####
##		##XXX####
##		##XXX####
##		##XXX####
##		##XXX####
##		##XXX####
##		##XXX####
##		##XXX####
##		##XXX####

Revision:

NOTES:

COPYRIGHT RELATED TO THE USE OF THIS DRAWING:
The use of this drawing shall be governed by standard copyright law as generally accepted in architectural practice.

ARCHITECT'S REQUIREMENTS AND APPROVALS:
It is the Builder's responsibility to notify MacKay-Lyons Sweetapple Architects Ltd. and to seek prior written approval for materials and workmanship which deviates from instructions provided by the Architect.

ENGINEER'S REQUIREMENTS AND APPROVALS:
It is the Builder's responsibility to notify MacKay-Lyons Sweetapple Architects Ltd. and to seek prior written approval for materials and workmanship which deviates from instructions provided by the Engineer.

AUTHORITIES' REQUIREMENTS AND APPROVALS:
All materials and workmanship must comply with the requirements of all authorities having jurisdiction over the work. It is the Builder's responsibility to gain necessary approval from all relevant Authorities.

DIMENSIONS:
All dimensions must be verified on site. Do not scale off drawings. Plans take precedent over elevations. In the absence of dimensions, or if discrepancies exist, consult Architect. All minimum dimensions are to comply with the National Building Code of Canada.

SHOP DRAWINGS:
Submit shop drawings to the Architect and Engineer for approval prior to manufacture of prefabricated elements of the building.

PLUMBING SCHEDULES

scale: AS NOTED
date: 03/13/2017
drawn: STAFF
chk'd: SMD

PP601

THIS DRAWING, AS AN INSTRUMENT OF SERVICE, IS AND SHALL REMAIN THE PROPERTY OF SMD ENGINEERING, PLLC. THE INFORMATION, DESIGN, OR CONCEPTS REPRESENTED ON THIS DRAWING ARE CONFIDENTIAL AND ARE NOT FOR GENERAL DISTRIBUTION. © SMD ENGINEERING, PLLC 2016
THIS DRAWING AND SHALL NOT BE REPRODUCED, PUBLISHED, OR USED IN ANY WAY WITHOUT THE PERMISSION OF SMD ENGINEERING, PLLC.

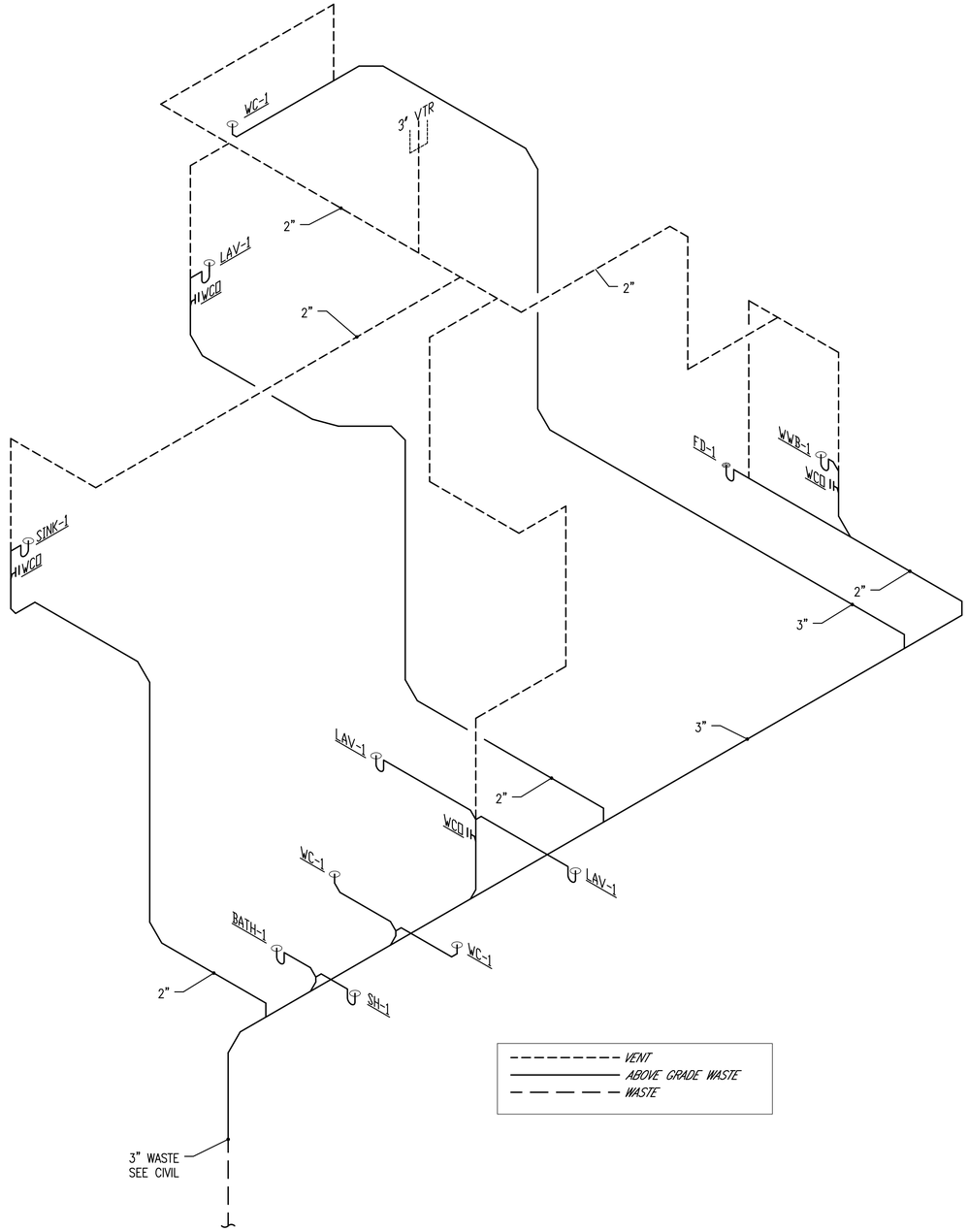

1 PP901 — 1000 SF - PLUMBING WASTE AND VENT ISOMETRIC
BUILDINGS 13, 16, 19, 26, 27

PLAN REVIEW ACCEPTANCE
FOR COMPLIANCE WITH THE APPLICABLE CONSTRUCTION CODES IDENTIFIED BELOW

☒ BUILDING	☒ STRUCTURAL
☒ MECHANICAL	☒ PLUMBING
☒ ELECTRICAL	☒ ENERGY
☐ ACCESSIBILITY	☐ FIRE

PLAN REVIEW ACCEPTANCE OF DOCUMENTS DOES NOT AUTHORIZE CONSTRUCTION TO PROCEED IN VIOLATION OF ANY FEDERAL, STATE, OR LOCAL REGULATIONS.
BY: MEM DATE: 08/24/17
WEST COAST CODE CONSULTANTS, INC.

Horizon Neighborhood
CABINS

7758 E. Horizon Run
Summit Powder Mountain
Eden, Utah

MacKay-Lyons Sweetapple Architects Limited

2188 Gottingen St.
Halifax, Nova Scotia
Canada B3K 3B4

ph: (902) 429.1867
fax: (902) 429.6276

Mechanical Service & Systems, Inc.
1055 South 700 West
Salt Lake City, UT 84104
801-255-9333

SMD ENGINEERING, PLLC
"Engineered Mechanical Solutions"
986 WEST ATHERTON DRIVE, SUITE 200
TAYLORSVILLE, UTAH 84123
(801) 268-3828, FAX (801) 268-3297
WWW.SMDENGINEERING.COM

No.	Description	Date
1	CODE REVIEW	08/16/2017
##		##XX/####
##		##XX/####
##		##XX/####
##		##XX/####
##		##XX/####
##		##XX/####
##		##XX/####
##		##XX/####
##		##XX/####
Revision:		

NOTES:

COPYRIGHT RELATED TO THE USE OF THIS DRAWING:
The use of this drawing shall be governed by standard copyright law as generally accepted in architectural practice.

ARCHITECT'S REQUIREMENTS AND APPROVALS:
It is the Builder's responsibility to notify MacKay-Lyons Sweetapple Architects Ltd. and to seek prior written approval for materials and workmanship which deviates from instructions provided by the Architect.

ENGINEER'S REQUIREMENTS AND APPROVALS:
It is the Builder's responsibility to notify MacKay-Lyons Sweetapple Architects Ltd. and to seek prior written approval for materials and workmanship which deviates from instructions provided by the Engineer.

AUTHORITIES' REQUIREMENTS AND APPROVALS:
All materials and workmanship must comply with the requirements of all authorities having jurisdication over the work. It is the Builder's responsibility to gain necessary approval from all relevant Authorities.

DIMENSIONS:
All dimensions must be verified on site. Do not scale off drawings. Plans take precedent over elevations. In the absence of dimensions, or if discrepancies exist, consult Architect. All minimum dimensions are to comply with the National Building Code of Canada.

SHOP DRAWINGS:
Submit shop drawings to the Architect and Engineer for approval prior to manufacture of prefabricated elements of the building.

PLUMBING WASTE AND VENT ISOMETRIC

scale: AS NOTED
date: 03/13/2017
drawn: STAFF
chk'd: SMD

PP901

permit set - march 13, 2017

FIXTURE SCHEDULE

TYPE	DESCRIPTION	MANUFACTURER	CATALOG NUMBER	VOLTS	TOTAL WATTS	LAMPS
F1	4" SQUARE LED DOWN LIGHT 0-10V DIMMING STANDARD SATIN NICKEL TRIM	HALO	H457CAT1E-EL406930-TLS408SNBB	120	13	LAMP: LED (INCLUDED), LUMENS: 600, CCT: 3000° K,
F2	WALL MOUNT LED ALUMINUM CONSTRUCTION - FROSTED GLASS - CAST GUARD	BASELITE	W1-FR-CG-SCBA-20W	120	20	LAMP: LED (INCLUDED),
F3	SURFACE MOUNTED LED CURVED FRONT	ARTEMIDE	USC-RDLC-2-B-9-30-08-SCBA	120	32	LAMP: LED (INCLUDED) LUMENS: CCT:3000K 90 CRI
F4-2	2 FOOT LONG RECESSED LINEAR LED 0-10V DIMMING STANDARD TRIMLESS WITH FLUSH SATIN ACRYLIC LENS	NULITE	RT4-06-L30-UNV-D-1C-FRF-WH-2	120	13	LAMP: LED (INCLUDED) LUMENS: 1450 CCT:3000K 80 CRI
F4-4	4 FOOT LONG RECESSED LINEAR LED 0-10V DIMMING STANDARD TRIMLESS WITH FLUSH SATIN ACRYLIC LENS	NULITE	RT4-06-L30-UNV-D-1C-FRF-WH-4	UNV	26	LAMP: LED (INCLUDED), LUMENS: 2897 CCT: 3000° K, 80 CRI
F4-8	8 FOOT LONG RECESSED LINEAR LED 0-10V DIMMING STANDARD TRIMLESS WITH FLUSH SATIN ACRYLIC LENS	NULITE	RT4-06-L30-UNV-D-1C-FRF-WH-8	UNV	52	LAMP: LED (INCLUDED), LUMENS: 5792 CCT: 3000° K, 80 CRI
F4-12	12 FOOT LONG RECESSED LINEAR LED 0-10V DIMMING STANDARD TRIMLESS WITH FLUSH SATIN ACRYLIC LENS	NULITE	RT4-06-L30-UNV-D-1C-FRF-WH-12	UNV	77	LAMP: LED (INCLUDED), LUMENS: 8688 CCT: 3000° K, 80 CRI
F5	LED UNDERCABINET TO BE DETERMINED					LAMP: LED (INCLUDED), LUMENS: 1300 CCT: 3000° K,
F6	LED PENDANT FIXTURE WITH 47" CORDS	ARTEMIDE	TALO 90 - 1922028A	120	39	LAMP: LED (INCLUDED), LUMENS: 3341 CCT: 3000° K, 80 CRI
F7	WET LOCATION RATED LED TAPE LIGHT MOUNTED IN ALUMINUM EXTRUSION 300 WATT EXTERIOR RATED POWER SUPPLY AT EXTERIOR ENTRY RAMP	Q-TRAN	IQ67-30-35-90-3.2-35 IQA-45DW-RD-FINISH-DF-35 QOM-300ST-120/24-1X15-CK-S	120/24	3.2 / FT	LAMP: LED (INCLUDED), LUMENS:254 / FT CCT: 3000° K,
F8	RECESSED LED STEP LIGHT	WHITEGOODS	WG-B100SCFW-CL-830-608-UNV-S	120	6.24	LAMP: LED (INCLUDED), LUMENS:608, CCT: 3000° K, 80 CRI
F9	NOT USED					
F10	J-BOX MOUNTED LED DOWNLIGHT	HALO	SLD606930WHUB	120	12.2	LAMP: LED (INCLUDED), LUMENS:780 CCT: 3000° K,
F11	LED PENDANT FIXTURE WITH LED LAMP	ARTEMIDE	SPHERA - RD211110	120		LAMP: LED (INCLUDED), LUMENS:608, CCT: 3000° K, 80 CRI
F12	LED PENDANT FIXTURE WITH 63" CORDS	ARTEMIDE	TALO 90 - 1922028A	120	39	LAMP: LED (INCLUDED), LUMENS: 3341 CCT: 3000° K, 80 CRI
F13	CEILING MOUNTED TRACK WITH TWO LED FIXTURES DIFFUSION SPREAD LENS	HALO	L80815FL9030AH LNC2-DSL L650AH / L901AH	120	21 EACH	LAMP: LED (INCLUDED), LUMENS: 1506 EACH CCT: 3000° K, 90 CRI
F14	CEILING PADDLE FAN SATIN NICKEL FINISH	CONCORD	CF52873-53 / 52SKY3ESN	120		

PANELBOARD SCHEDULE

PANEL A TYPE ____ 120/240 VOLTS 1 PH 3 W

MOUNTING: ☐ FLUSH ☐ SURFACE

DIMENSIONS: ☐ W ☐ D (in.) ☐ H

LOCATION CABIN A

AMP 200

MAINS: X LUGS ___ BREAKER ___ SUBFEED LUGS ___ ISO GROUND ___ 200% NEUTRAL ___ SPD

BRANCH BREAKERS

ITEM	AMPS	POLE	WIRE SIZE	CIR. NO.	L. PHASE LOAD A	L. PHASE LOAD B	R. PHASE LOAD A	R. PHASE LOAD B	CIR. NO.	AMPS	POLE	WIRE SIZE	ITEM
LIGHTING MAIN	20	1	12	1	350		475		2	20	1	12	LIGHTING LOWER
REFRIGERATOR	20	1	12	3		1500		1400	4	20	1	12	WASHER
RANGE	50	2	6	5	4000		2500		6	30	2	10	DRYER
-	-	-	-	7		4000		2500	8	-	-	-	-
DISPOSAL	20	1	12	9	1200		500		10	20	1	12	DATA BOARD
DISH WASHER	20	1	12	11		1200		500	12	20	1	12	P-RAD
RECEPTACLES KITCHEN *	20	1	12	13	500		900		14	20	1	12	RECEPTACLES BEDROOM 1 *
RECEPTACLE BATH	20	1	12	15		360		720	16	20	1	12	RECEPTACLES BEDROOM 2 *
RECEPTACLES	20	1	12	17	720		1080		18	20	1	12	RECEPTACLES FLOOR
RECEPTACLES	20	1	12	19		720		500	20	20	1	12	RECEPTACLE BATH
HEAT TAPE	20	1	12	21			500		22	20	1	12	RECEPTACLE BATH
RECEPTACLES KITCHEN *	20	1	12	23		500			24	20	1		SPARE
SPARE	20	1		25					26				SPACE ONLY
SPARE	20	1		27					28				SPACE ONLY
SPARE	20	1		29					30				SPACE ONLY
SPARE	20	1		31					32				SPACE ONLY
SPACE ONLY				33					34				SPACE ONLY
SPACE ONLY				35					36				SPACE ONLY
SPACE ONLY				37					38				SPACE ONLY
SPACE ONLY				39					40				SPACE ONLY
SPACE ONLY				41					42				SPACE ONLY
* ARC FAULT BREAKER					6770	8280	5955	5620					
					12725	13900	TOTAL						CONNECTED LOAD TOTAL 26625 W
					106	116	AMPS/PHASE						

CABIN 'A'

EQUIP RATING 10,000 AMPS RMS SYM.

GENERAL SHEET NOTES

1. ALL RECEPTACLES REQUIRED TO BE TAMPER-RESISTANT PER IRC.

SHEET KEYNOTES

1. COORDINATE HOOD FAN CONTROL LOCATION WITH KITCHEN HOOD INSTALLER.
2. FLOOR MOUNTED RECEPTACLES MUST BE LISTED FOR FLOOR MOUNTED AND FACE UP APPLICATION.

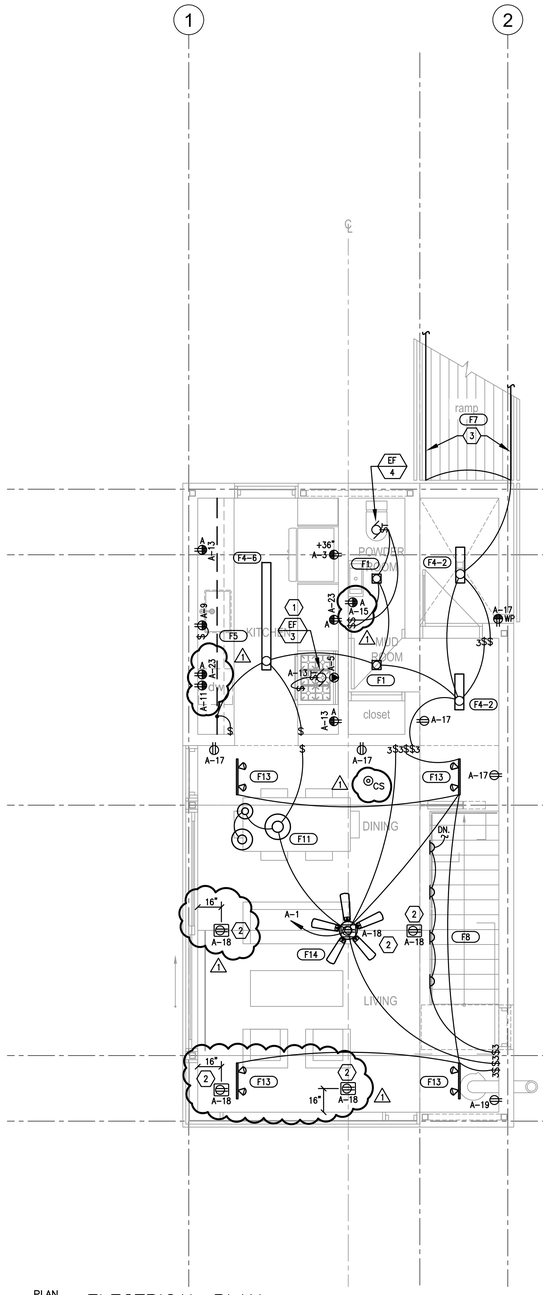

PLAN NORTH

ELECTRICAL PLAN
CABIN 'A' 1000 MAIN LEVEL
1/4" = 1'-0"

0 2' 4' 8'

PLAN NORTH

ELECTRICAL PLAN
CABIN 'A' 1000 LOWER LEVEL
1/4" = 1'-0"

0 2' 4' 8'

BNA CONSULTING
635 South State Street
Salt Lake City, Utah 84111
P:801.532.2196
F:801.532.3305
www.bnaconsulting.com

© 2016 BNACONSULTING

SALT LAKE ST.GEORGE

Horizon Neighborhood LODGE
7759 E. Horizon Run
Summit Powder Mountain
Eden, Utah

MacKay-Lyons Sweetapple
Architects Limited
2188 Gottingen St.
Halifax, Nova Scotia
Canada B3K 3B4
ph: (902) 429.1867
fax: (902) 429.6276

PLAN REVIEW ACCEPTANCE
FOR COMPLIANCE WITH THE APPLICABLE CONSTRUCTION CODES IDENTIFIED BELOW.
☒ BUILDING ☒ STRUCTURAL
☒ MECHANICAL ☒ PLUMBING
☒ ELECTRICAL ☒ ENERGY
☐ ACCESSIBILITY ☐ FIRE
PLAN REVIEW ACCEPTANCE OF DOCUMENTS DOES NOT AUTHORIZE CONSTRUCTION TO PROCEED IN VIOLATION OF ANY FEDERAL, STATE, OR LOCAL REGULATIONS.
BY: MEM DATE: 08/24/17
WEST COAST CODE CONSULTANTS, INC.

PROFESSIONAL ENGINEER
JOSHUA OAKESON
No. 7707671-2202
STATE OF UTAH

SALMON ELECTRICAL CONTRACTORS
1778 WEST 1180 SOUTH
WOODS CROSS, UT 84087
P: 801-292-3444
F: 801-292-4273
WWW.SALMONELECTRIC.COM

#		####
#		####
#		####
#		####
#		####
#		####
#		####
#		####
1	CITY COMMENTS	08/15/2017
No.	Description	Date
Revision:		

NOTES:

COPYRIGHT RELATED TO THE USE OF THIS DRAWING:
The use of this drawing shall be governed by standard copyright law as generally accepted in architectural practice.

ARCHITECT'S REQUIREMENTS AND APPROVALS:
It is the Builder's responsibility to notify MacKay-Lyons Sweetapple Architects Ltd. and to seek prior written approval for materials and workmanship which deviates from instructions provided by the Architect.

ENGINEER'S REQUIREMENTS AND APPROVALS:
It is the Builder's responsibility to notify MacKay-Lyons Sweetapple Architects Ltd. and to seek prior written approval for materials and workmanship which deviates from instructions provided by the Engineer.

AUTHORITIES' REQUIREMENTS AND APPROVALS:
All materials and workmanship must comply with the requirements of all authorities having jurisdication over the work. It is the Builder's responsibility to gain necessary approval from all relevant Authorities.

DIMENSIONS:
All dimensions must be verified on site. Do not scale off drawings. Plans take precedent over elevations. In the absence of dimensions, or if discrepancies exist, consult Architect. All minimum dimensions are to comply with the National Building Code of Canada.

SHOP DRAWINGS:
Submit shop drawings to the Architect and Engineer for approval prior to manufacture of prefabricated elements of the building.

ELECTRICAL PLAN - CABIN 1000 MAIN & LOWER LEVEL

scale: SEE GRAPH
date: 16-07-01
drawn: BNA
chk'd: CF

E300

By: cshirin Aug 15, 2017 - 10:28am
J:\2016\177\DRAW\16177-E300.dwg