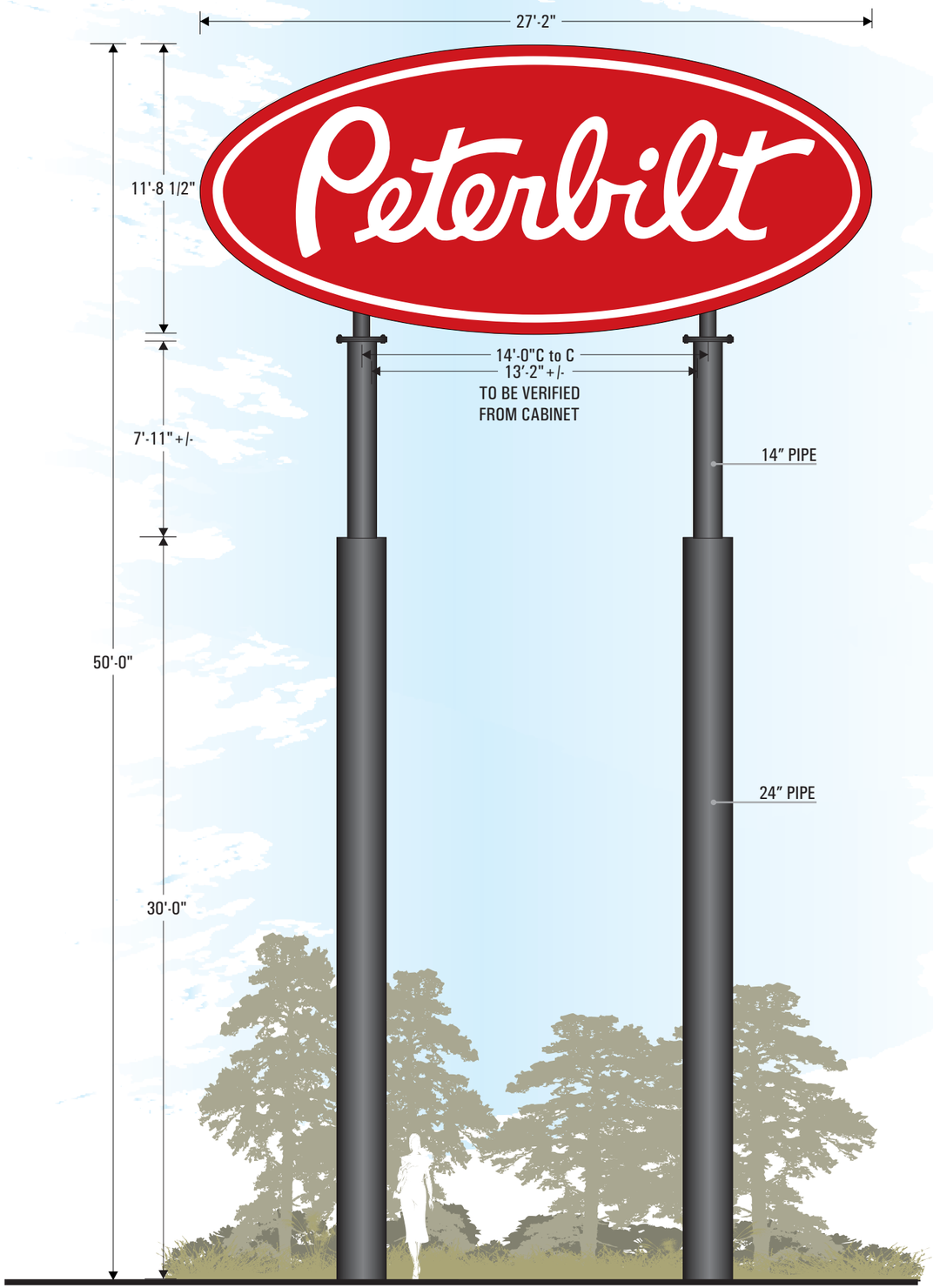

1 NEW D/F SIGN DISPLAY — SCALE: 3/16" = 1'-0"

OPTION 1 QUANTITY: 1 - RECEIVE & INSTALL

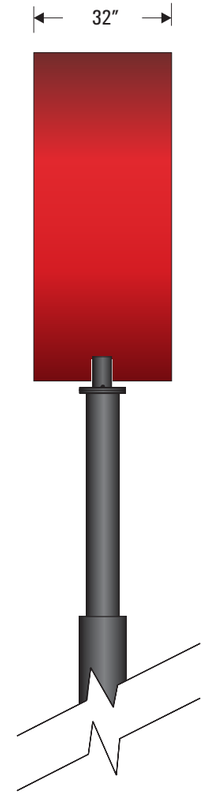

1.2 SIDE VIEW

SCOPE OF WORK:

RECEIVE D/F ILLUMINATED CABINET & INSTALL ON NEW PIPES AT 50' OAH. PIPE SIZES TO BE DETERMINED BY YESCO ENGINEERING DEPARTMENT. PAINT PIPES SATIN BLACK. ENGINEERING TO ALLOW FOR SIGN REMOVAL & RELOCATION IN 5 YEARS.

PERMITTING	SIGN1 AREA: 249.82ft²
FINAL ELECTRICAL CONNECTION BY:	NOT INCLUDED

ART SUPERIMPOSED ON PHOTO - SHOWN AT APPROXIMATE RELATIVE SCALE

YESCO DESIGN

1605 South Gramercy Rd.
Salt Lake City, UT 84104
801.487.8481

www.yesco.com

© 2014 YESCO LLC. All right reserved

This drawing was created to assist you in visualizing our proposal. The original ideas herein are the property of YESCO LLC. Permission to copy or revise this drawing can only be obtained through a written agreement with YESCO.
The colors shown are only approximated on any computer monitor, inkjet or laser print. The final product may vary slightly in color from your computer monitor or print.

Revisions

No.	Date / Description
orig.	date
1	OPTION CHOSEN
2	14" PIPE
3	

Approval

Client Sign / Date

Peterbilt of Utah

1559 W. 2550 N.
Weber County(uncorporated),UT

Acct. Exec: RANDY OLSON

Designer: C. LEWIS

Date: 10-9-2014

Highrise Pole Sign

49012 R1

scale: as noted

ART 1.0

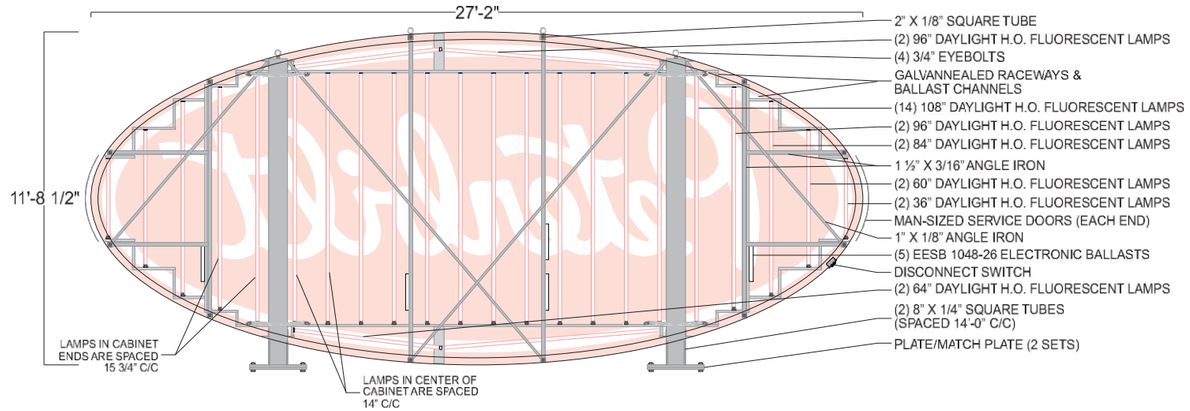

FRAME & LAMP DETAIL
SCALE: 3/16" = 1'-0"

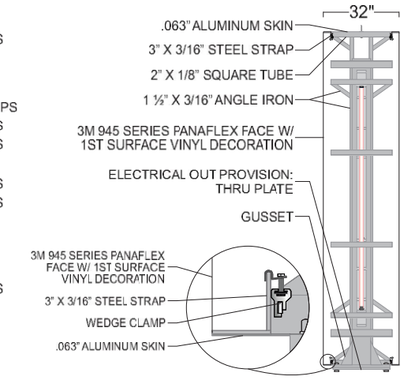

CROSS SECTION
SCALE: 3/16" = 1'-0"

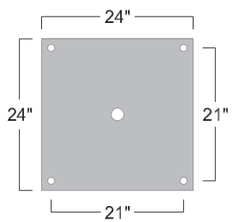

1" X 24" X 24" PLATES
1 1/8" HOLES
1" BOLTS

PLATE WILL ACCEPT:
22" PIPE
18" TUBE

PLATE DETAIL
SCALE: ½" = 1'

FRAME & LAMP DETAIL:
DESIGN FACTOR: 20 PSF
32" X 3" X 3/16" REV. ANGLE IRON FRAME
BLEED FACES
EXTERIOR FINISH: WHITE (SATIN FINISH)
INTERIOR FINISH: PRIMED WHITE
SKINS REMOVABLE FOR SERVICE
U.L. APPROVED
ELECTRICAL: 15.00 AMPS, 120 VOLTS,
2 SWITCHES
SQUARE FEET- BOXED: 318.08
ACTUAL: 249.52

FACE DETAIL:
3M 945 SERIES PANAFLEX FACE W/
1ST SURFACE VINYL DECO:
3630-2516 RED - BACKGROUND & OUTSIDE BORDER
WHITE - "PETERBILT" COPY & & INSIDE BORDER

GRAPHIC DETAIL
SCALE: 3/16" = 1'-0"

ART SUPERIMPOSED ON PHOTO - SHOWN AT APPROXIMATE RELATIVE SCALE

YESCO®
DESIGN
1605 South Gramercy Rd.
Salt Lake City, UT 84104
801.487.8481
www.yesco.com

© 2014 YESCO LLC. All right reserved

This drawing was created to assist you in visualizing our proposal. The original ideas herein are the property of YESCO LLC. Permission to copy or revise this drawing can only be obtained through a written agreement with YESCO.
The colors shown are only approximated on any computer monitor, inkjet or laser print. The final product may vary slightly in color from your computer monitor or print.

Revisions

No.	Date / Description
orig.	date
1	OPTION CHOSEN
2	
3	

Approval

Client Sign / Date

Peterbilt of Utah

1559 W. 2550 N.
Weber County(uncorporated),UT

Acct. Exec: RANDY OLSON
Designer: C. LEWIS

Date: 10-9-2014

Highrise Pole Sign
49012

scale: as noted

ART 2.0