EROSION CONTROL NOTES:

1. SANDBAGS WILL BE PLACED AT DISCHARGE LOCATIONS TO CONTAIN AND DIVERT STORM WATER THROUGH THE INLET PROTECTION.

2. AN EARTHEN BERM 6" HIGH WILL BE CONSTRUCTED TO CONTAIN THE STORM WATER AND DIVERT IT TO DISCHARGE AREAS.

3. STORM WATER WILL BE DISCHARGED INTO AN EXISTING DRAINAGE SYSTEM. EXISTING LINES SHALL BE INSPECTED PRIOR TO CERTIFICATE OF OCCUPANCY AND CLEANED IF NECESSARY.

4. THE STORM WATER POLLUTION PREVENTION PLAN SHALL CONFORM TO ALL STATE DIVISION OF ENVIRONMENTAL PROTECTION REGULATIONS.

STREET MAINTENANCE NOTES:

1. REMOVE ALL SEDIMENT DEPOSITED ON PAVED ROADWAYS IMMEDIATELY.
2. SWEEP PAVED AREAS THAT RECEIVE CONSTRUCTION TRAFFIC WHENEVER SEDIMENT BECOMES VISIBLE.
3. PAVEMENT WASHING WITH WATER IS PROHIBITED IF IT RESULTS IN A DISCHARGE TO THE STORM DRAIN SYSTEM.

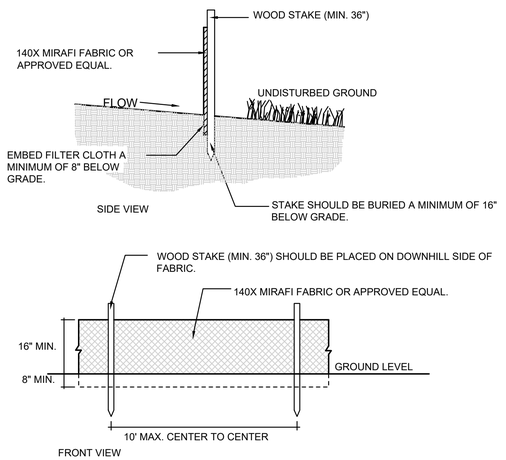

1 SILT FENCE

Scale: (NOT TO SCALE)

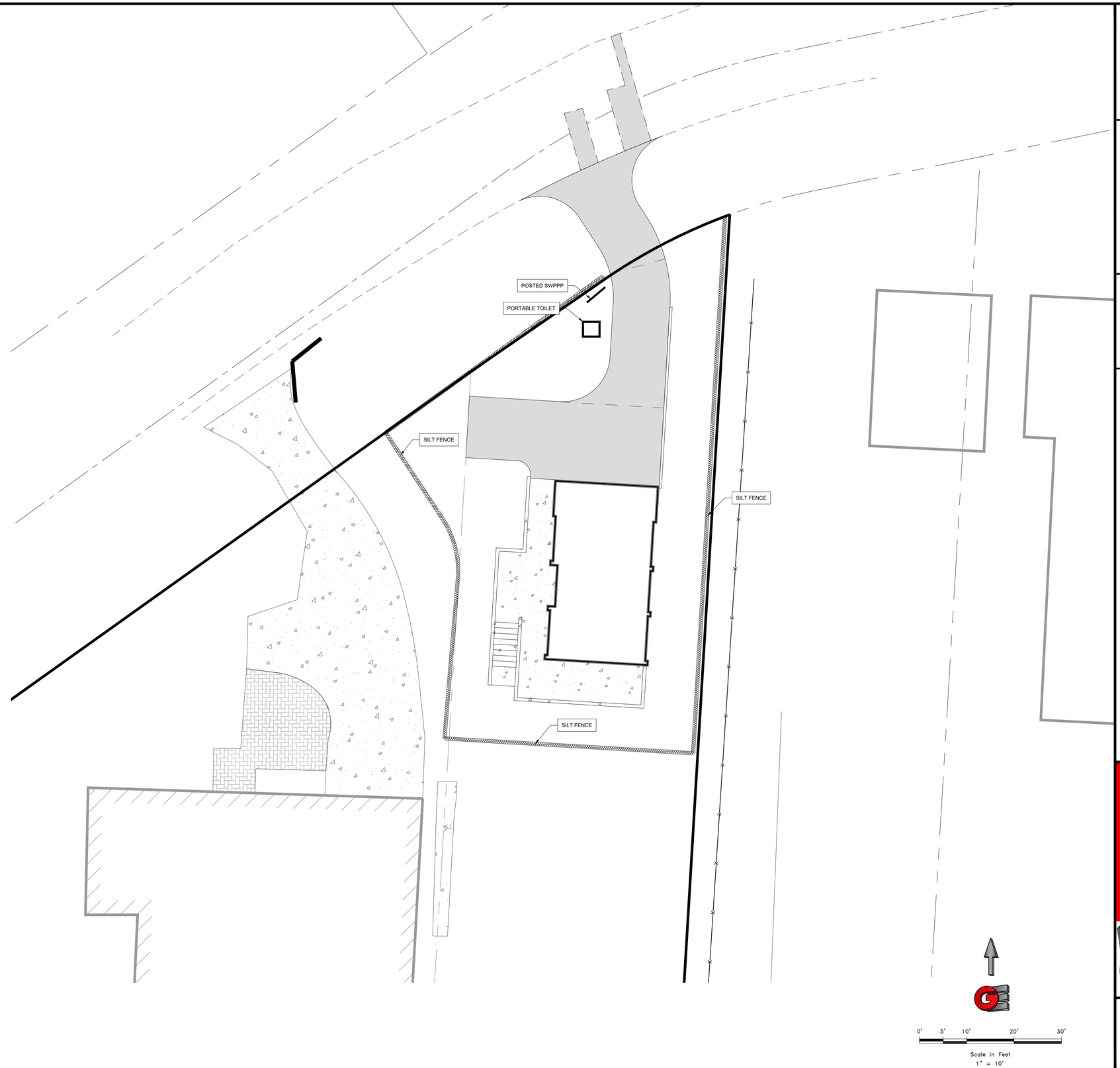

REVISIONS	
DATE	DESCRIPTION

SCALE 1" = 10'
DATE 1-15-2021
DESIGN DESIGN
DRAWN DRAWN
CHECKED CHECKED

DWG. P:\1341 - MOUNTAIN WEST ARCHITECTURE\2001 - VANDERHEIDE\DESIGN\DWG\VANDERHEIDE - CD.DWG

PROFESSIONAL STRUCTURAL ENGINEER
1-15-2021
No. 4859845
TYLER M. NIELSON
LICENSED
STATE OF UTAH

STORM WATER POLLUTION PREVENTION PLAN

PROJECT NAME

PROJECT ADDRESS

CITY, WEBER, UTAH

GARDNER ENGINEERING
CIVIL • LAND PLANNING
MUNICIPAL • LAND SURVEYING
5150 SOUTH 375 EAST OGDEN, UT
OFFICE: 801.476.0202 FAX: 801.476.0066

SWP

R:\1341 - Mountain West Architecture\2001 - Vanderheide\DESIGN\DWG\VANDERHEIDE - CD.dwg, 1/15/2021 10:23:51 AM, 1:1