RICHMOND HOFFMAYER INC.
STRUCTURAL ENGINEERING

STRUCTURAL ENGINEERING CALCULATIONS

CLIENT:	HUGHES UMBANHOWAR ARCHITECTS
PROJECT:	VILLAGE NEST - UNIT 18 AMENDMENT
LOCATION:	5754 DAYBREAK RIDGE, EDEN, UTAH
BUILDING CODE:	2015 IBC - ASCE 7-10 - WEBER COUNTY, UTAH
RHSE FILE NO.:	2017-0610
ENGINEER:	J.J.H.
DATE:	AUGUST 25, 2017
ISSUE:	BLDG. DEPT. SUBMITTAL #1

NOTE: THIS BUILDING IS FELDSPAR LVN - REVERSED

THESE CALCULATIONS ARE NOT VALID UNLESS SIGNED AND SEALED IN THE SPACE ABOVE.

PLAN REVIEW ACCEPTANCE

FOR COMPLIANCE WITH THE APPLICABLE CONSTRUCTION CODES IDENTIFIED BELOW.

[X] BUILDING	[X] STRUCTURAL
[X] MECHANICAL	[X] PLUMBING
[X] ELECTRICAL	[X] ENERGY
[ ] ACCESSIBILITY	[ ] FIRE

PLAN REVIEW ACCEPTANCE OF DOCUMENTS DOES NOT AUTHORIZE CONSTRUCTION TO PROCEED IN VIOLATION OF ANY FEDERAL, STATE, OR LOCAL REGULATIONS.

BY: MEM DATE: 07/19/18

WEST COAST CODE CONSULTANTS, INC.

4425 CANOGA AVENUE WOODLAND HILLS CA 91364
PHONE (818) 347-7008 FAX (818) 883-8869
Info@RichmondHoffmayer.com

RICHMOND HOFFMAYER INC.
STRUCTURAL ENGINEERING

DATE 7/10/2017
SHEET 1

VERTICAL LOADS - ROOFS AND FLOORS:

LOCATION: 5754 DAYBREAK RIDGE, EDEN, UTAH

METAL ROOF	A	WEIGHTS
METAL ROOFING		4.0 psf
1/2" PLY		1.5 psf
2x10 @ 16		2.6 psf
INSULATION		1.0 psf
MISC. MECH.		1.0 psf
1/2" PLY		1.5 psf
SPRINKLERS		1.0 psf
5/8" GWB		3.1 psf
-		- psf
-		- psf
ADDITIONAL LOAD		0.0 psf
DEAD	D =	15.7 psf
ROOF LIVE	Lo =	20.0 psf
ROOF PITCH	F =	0.75 : 12
PITCH REDUCTION	R2 =	1.00
ROOF LIVE	Lr =	20.0 psf
PITCH ADJUSTED DEAD LOAD	D' =	15.8 psf

OPENED BALCONY	B	WEIGHTS
DECKING		3.0 psf
FLOOR FRAMING		4.0 psf
-		- psf
-		- psf
-		- psf
-		- psf
-		- psf
-		- psf
-		- psf
-		- psf
ADDITIONAL LOAD		0.0 psf
DEAD	D =	7.0 psf
LIVE BALCONY (1.5 x RESIDENCIAL LIVE LOAD)	Lo =	60.0 psf
FRAMING PITCH		0.00 : 12
		1.00
ADJUSTED LIVE BALCONY (1.5 x RESIDENCIAL LIVE LOA	Lo =	60.0 psf
PITCH ADJUSTED DEAD LOAD	D' =	7.0 psf

2nd FLOOR	C	WEIGHTS
HARDWOOD		4.0 psf
1-1/8" PLY — 3 WARMBOARD		3.4 psf
MISC. MECH.		1.0 psf
FLOOR FRAMING		4.0 psf
5/8" PLY		1.9 psf
-		- psf
-		- psf
-		- psf
-		- psf
-		- psf
ADDITIONAL LOAD		0.0 psf
DEAD	D =	14.3 psf
LIVE RESIDENCE	Lo =	40.0 psf
FRAMING PITCH		0.00 : 12
		1.00
ADJUSTED LIVE RESIDENCE	Lo =	40.0 psf
PITCH ADJUSTED DEAD LOAD	D' =	14.3 psf

DRIVEWAY LOADS	D	WEIGHTS
6" CONCRETE		75.0 psf
1-1/8" PLY		3.4 psf
FLOOR FRAMING		4.0 psf
SIDING		3.0 psf
-		- psf
-		- psf
-		- psf
-		- psf
-		- psf
-		- psf
ADDITIONAL LOAD		0.0 psf
DEAD	D =	85.4 psf
LIVE STAIRS AND EXIT	L =	100.0 psf
FRAMING PITCH		0.00 : 12
		1.00
ADJUSTED LIVE STAIRS AND EXIT	L =	100.0 psf
PITCH ADJUSTED DEAD LOAD	D' =	85.4 psf

20% SNOW LOAD FOR SEISMIC	E	WEIGHTS
-		- psf
-		- psf
- $P_f = 264$ PSF		- psf
-		- psf
- $W = 0.2(264)$		- psf
-		- psf
- SEISMIC W/ SNOW		- psf
-		- psf
-		- psf
ADDITIONAL LOAD		52.8 psf
-	- =	52.8 psf
-	- =	0.0 psf
FRAMING PITCH		0.00 : 12
		1.00
ADJUSTED -	- =	0.0 psf
PITCH ADJUSTED DEAD LOAD	D' =	52.8 psf

GARAGE LOADS	F	WEIGHTS
4" CONCRETE		50.0 psf
1-1/8" PLY		3.4 psf
FLOOR FRAMING		4.0 psf
INSULATION		1.0 psf
MISC. MECH.		1.0 psf
SPRINKLERS		1.0 psf
5/8" GWB		3.1 psf
-		- psf
-		- psf
-		- psf
ADDITIONAL LOAD		0.0 psf
DEAD	D =	63.5 psf
LIVE RESIDENTIAL & GARAGE	L =	40.0 psf
FRAMING PITCH		0.00 : 12
		1.00
ADJUSTED LIVE RESIDENTIAL & GARAGE	L =	40.0 psf
PITCH ADJUSTED DEAD LOAD	D' =	63.5 psf

4425 CANOGA AVENUE WOODLAND HILLS CA 91364
PHONE (818) 347-5948 FAX (818) 883-8869

RICHMOND HOFFMAYER INC.
STRUCTURAL ENGINEERING

DATE 6/26/2017
SHEET 1A

VERTICAL LOADS - WALLS:

LOCATION: 5754 DAYBREAK RIDGE, EDEN, UTAH

EXTERIOR	U	WEIGHTS
SIDING		3.0 psf
FURRING		2.0 psf
1/2" PLY		1.5 psf
2x6 @ 16		2.1 psf
INSULATION		1.0 psf
INSULATION		1.0 psf
1/2" PLY		1.5 psf
5/8" GWB		3.1 psf
-		- psf
-		- psf
-		- psf
-	- =	15.2 psf

INTERIOR	V	WEIGHTS
5/8" GWB		3.1 psf
2x6 @ 16		1.6 psf
MISC. MECH.		1.0 psf
5/8" GWB		3.1 psf
-		- psf
-		- psf
-		- psf
-		- psf
-		- psf
-		- psf
-		- psf
-	- =	8.9 psf

-	W	WEIGHTS
-		- psf
-		- psf
-		- psf
-		- psf
-		- psf
-		- psf
-		- psf
-		- psf
-		- psf
-		- psf
-		- psf
-	- =	0.0 psf

-	X	WEIGHTS
-		- psf
-		- psf
-		- psf
-		- psf
-		- psf
-		- psf
-		- psf
-		- psf
-		- psf
-		- psf
-		- psf
-	- =	0.0 psf

-	Y	WEIGHTS
-		- psf
-		- psf
-		- psf
-		- psf
-		- psf
-		- psf
-		- psf
-		- psf
-		- psf
-		- psf
-	- =	0.0 psf

-	Z	WEIGHTS
-		- psf
-		- psf
-		- psf
-		- psf
-		- psf
-		- psf
-		- psf
-		- psf
-		- psf
-		- psf
-		- psf
-	- =	0.0 psf

4425 CANOGA AVENUE WOODLAND HILLS CA 91364
PHONE (818) 347-5948 FAX (818) 883-8869

SIP INFO

PBS Panel R-Values

Type I modified EPS core

Core Thickness	R-Value at 75°	R-Value at 40°	R-Value at 25°
3-1/2"	15	16	17
5-1/2"	23	25	26
7-1/4"	30	32	33
9-1/4"	37	40	42
11-1/4"	45	49	51

PBS Panel Weights

Type I modified EPS core

WALLS

Core Thickness	OSB Skin Thickness		
	7/16"	5/8"	3/4"
3-1/2"	3.3	4.6	5.5
5-1/2"	3.5	4.8	5.7
7-1/4"	3.7	5.0	5.9
9-1/4"	3.9	5.2	6.1
11-1/4"	4.0	5.4	6.2

ROOF

Load Charts with a Built in Safety Factor (Refer to current Listing Reports for up to date load tables)

All of Premier's load charts have a built-in safety factor. We have taken our SIPs products' ultimate load at failure and divided this number by 3. The result is then used as the design load value.

Table 1: Maximum Allowable Uniform Transverse Load (psf) – Type S Panels[1,3]

Panel Core Thickness (in)	Deflection Limit[2]	Panel Span (ft)									
		4[4]	8	10	12	14	16	18	20	22	24
3.5	L/360	100	43	29	21	16	10				
	L/240	143	60	42	33	25	16				
	L/180	143*	61*	57	46	34	22				
5.5	L/360	105	52	39	30	24	18	15	11		
	L/240	162	78	58	36	32	28	22	16		
	L/180	191*	80*	60*	46*	40	34	29	21		
7.25	L/360	120	61	60	42	34	26	21	15	13	11
	L/240	179*	85*	75*	61	50	39	31	23	21	18
	L/180	179*	85*	75*	69*	60*	50*	42	31	28	24
9.25	L/360	131	80	66	52	43	33	28	22	20	18
	L/240	168*	86*	71*	57*	51*	46*	42*	34	30	26
	L/180	168*	86*	71*	57*	51*	46*	42*	39*	37*	34*
11.25	L/360	132	94*	76*	51	50	48	38	28	24	20
	L/240	163*	94*	76*	59*	55*	51*	45*	39*	36*	31*
	L/180	163*	94*	76*	59*	55*	51*	45*	39*	36*	33*

[1] Table values assume a simply supported panel with 1.5 in. of continuous bearing on facing at supports. Permanent loads, such as dead load, shall not exceed 0.25 times the tabulated load. Panels shall use OSB surface splines not less than 7/16 in. thick inserted below the facing on each side of the panel.
[2] Deflection limit shall be selected by building designer based on the serviceability requirements of the structure and the requirements of adopted building code.
[3] Tabulated values for 8 ft walls apply to panels constructed with the OSB strength axis oriented either parallel or perpendicular to supports. Tabulated values for other lengths are based on the strong-axis of the facing material oriented parallel to the span direction.
[4] Panels spanning 4 ft shall be a minimum of 8 ft long spanning a minimum of two 4 ft spans. No single span condition is allowed.
[5] For wall panel capacities utilizing a zero bearing configuration (Figure 2), the allowable load shall be determined using C_v=0.86.
*An asterisk (*) indicates the value shown is governed by the average peak load divided by 3.

RICHMOND HOFFMAYER INC.
STRUCTURAL ENGINEERING

PROJECT	VILLAGE NEST	JOB	2017-0610
CLIENT	-		
ADDRESS	EDEN, UT		
DESIGN	HUUM		
ENGINEER	J.H.	DATE	6/14/2017
	RICHMOND PE 44628 HOFFMAYER SE 3435	SHEET	3 OF

SNOW LOADS:

5754 DAYBREAK TRIPLE
EDEN, UT 84310
ELEV. 8040 ft

EXPOSURE C
P_g = 264 PSF PER WEBER COUNTY

ROOF PITCH < 1:12 ⟶ CONSIDER FLAT

$P_f = 0.7 C_e C_t I_s P_g$ ASCE 7-10 (7.3-1)

C_e = 1.0 PARTIALLY EXPOSED
C_t = 1.2 UNHEATED (UNUSED VACATION HOME)
I_s = 1.0 RISK CATEGORY II

$P_f = 0.7(1.0)1.2(1.0)264$ = 221.8 PSF ⟶ 264 PSF
USE ↑ W/O REDUCTION

S = 264 PSF

OVERHANG:

ASCE 7-10 7.4.5
$S_{OH} = 2P_f = 2(221.8)$ = 443.6 PSF

4425 CANOGA AVENUE WOODLAND HILLS CA 91364
PHONE (818) 347-7008 FAX (818) 883-8869
Info@RichmondHoffmayer.com

RICHMOND HOFFMAYER INC.
STRUCTURAL ENGINEERING

PROJECT	VILLAGE NEST	JOB	2017-0610
CLIENT	-		
ADDRESS	EDEN, UT		
DESIGN	HUUM		
ENGINEER	J.H.	DATE	6/14/2017
	RICHMOND PE 44628 HOFFMAYER SE 3935	SHEET	4 OF

LOAD COMBINATIONS:

$1.2D + 1.6L + 0.5(L_r \text{ OR } S)$
$1.2D + 1.6(L_r \text{ OR } S) + L$
$1.2D + 1.0W + L + 0.5(L_r \text{ OR } S)$
$1.2D + 1.0E + L + 0.2S$
$0.9D + 1.0W$
$0.9D + 1.0E$

EFFECTIVE SEISMIC WEIGHT:

ASCE 7-10 12.7.2

P_f EXCEEDS 30 PSF ∴ 20% OF UNIFORM DESIGN SNOW LOAD...

$W_{ROOF} = 15.8 + 0.2(264) = \underline{68.6 \text{ PSF}}$

$W_{FLOOR} = \underline{26.7 \text{ PSF}}$

$W_{GARAGE} = \underline{63.5 \text{ PSF}}$

$W_{DRIVE} = 65.4 + 0.2(264) = \underline{130.2 \text{ PSF}}$

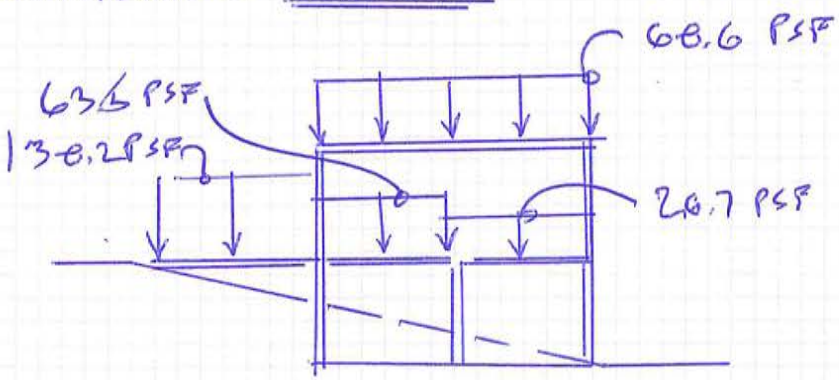

SEISMIC WEIGHTS TYP.

4425 CANOGA AVENUE WOODLAND HILLS CA 91364
PHONE (818) 347-7008 FAX (818) 883-8869
Info@RichmondHoffmayer.com

RICHMOND HOFFMAYER INC.
STRUCTURAL ENGINEERING

PROJECT	FELDSPAR LOWER	JOB	2017-0610
CLIENT	VILLAGE NEST		
ADDRESS	EDEN, UTAH		
DESIGN	HUUM		
ENGINEER	J.H.	DATE	6/16/2017
	RICHMOND PE 49628 HOFFMAYER SE 3935	SHEET	3 OF

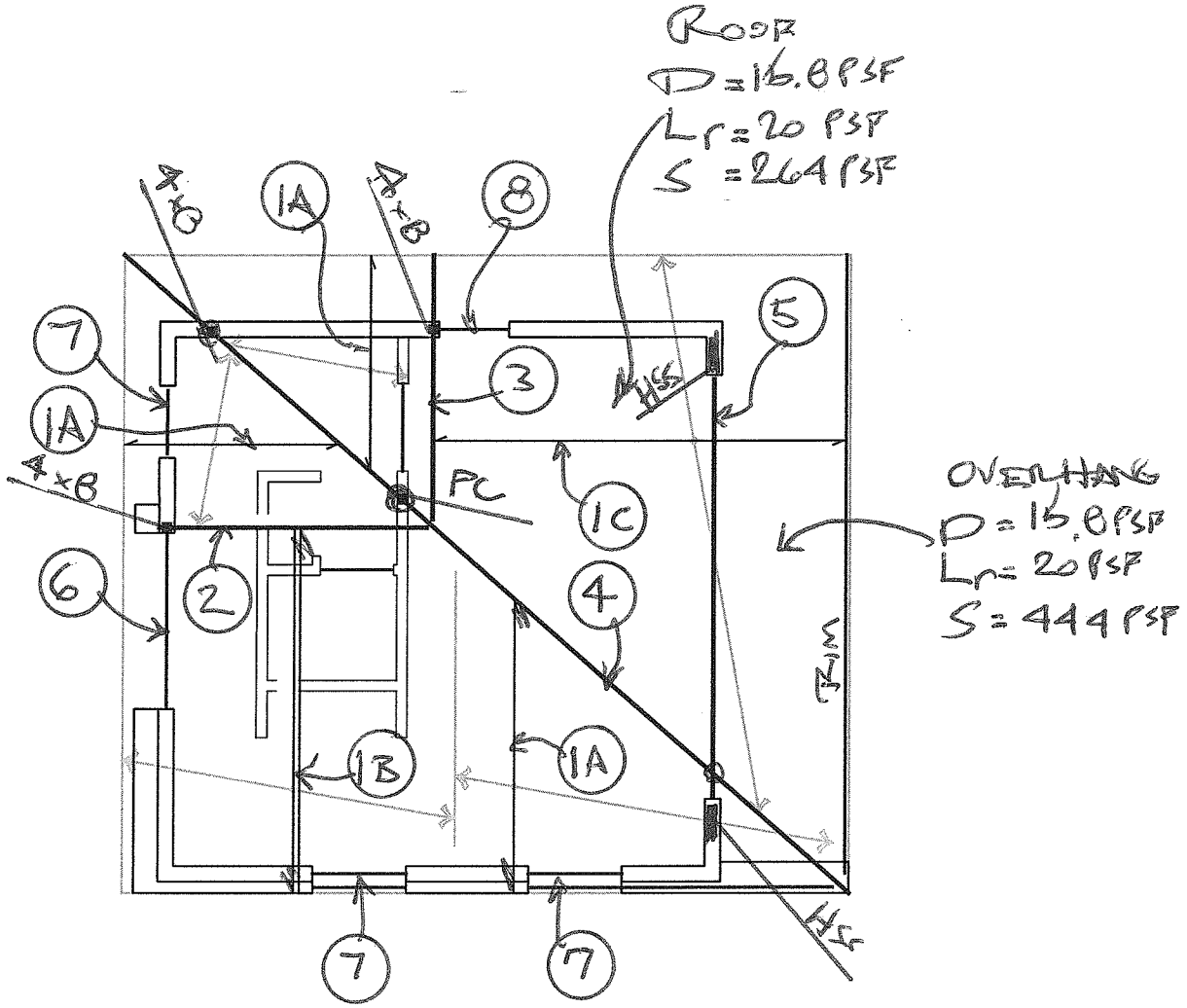

ROOF FRAMING PLAN

FELDSPAR - LOWER

N.T.S.

○ : BEAM

4425 CANOGA AVENUE WOODLAND HILLS CA 91364
PHONE (818) 347-7008 FAX (818) 883-8869
Info@RichmondHoffmayer.com

Wood Beam

File = d:\ENERCALC Projects\2017-0610.ec6
ENERCALC, INC. 1983-2017, Build:6.17.3.17, Ver:6.17.3.17
Lic. # : KW-06002886
Licensee : RICHMOND HOFFMAYER

Description : B1A - RAFTERS

CODE REFERENCES

Calculations per NDS 2015, IBC 2015, CBC 2016, ASCE 7-10
Load Combination Set : ASCE 7-10

Material Properties

Analysis Method : Allowable Stress Design
Load Combination ASCE 7-10

Wood Species : Trus Joist
Wood Grade : MicroLam LVL 1.9 E

Beam Bracing : Beam is Fully Braced against lateral-torsional buckling

Fb - Tension	2,600.0 psi
Fb - Compr	2,600.0 psi
Fc - Prll	2,510.0 psi
Fc - Perp	750.0 psi
Fv	285.0 psi
Ft	1,555.0 psi

E : Modulus of Elasticity

Ebend- xx	1,900.0 ksi
Eminbend - xx	965.71 ksi
Density	42.0 pcf

Repetitive Member Stress Increase

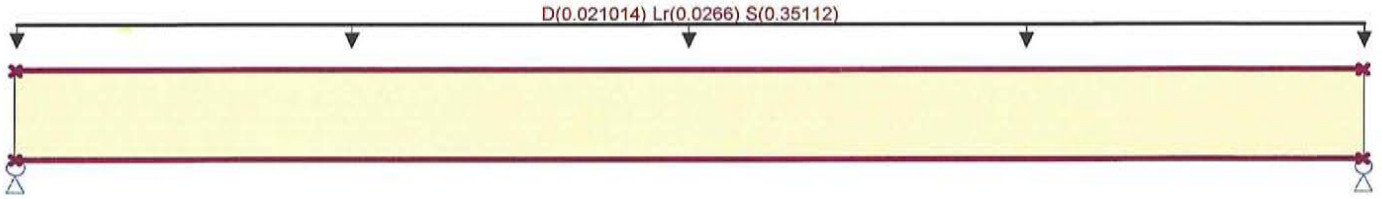

1.75x11.875

Span = 14.0 ft

Applied Loads

Service loads entered. Load Factors will be applied for calculations.

Uniform Load : D = 0.01580, Lr = 0.020, S = 0.2640 ksf, Tributary Width = 1.330 ft, (ROOF LOADS)

DESIGN SUMMARY

Design OK

Maximum Bending Stress Ratio	=	0.774 : 1	Maximum Shear Stress Ratio	=	0.494 : 1
Section used for this span		1.75x11.875	Section used for this span		1.75x11.875
fb : Actual	=	2,660.07 psi	fv : Actual	=	161.95 psi
FB : Allowable	=	3,438.50 psi	Fv : Allowable	=	327.75 psi
Load Combination		+D+S	Load Combination		+D+S
Location of maximum on span	=	7.000 ft	Location of maximum on span	=	13.029 ft
Span # where maximum occurs	=	Span # 1	Span # where maximum occurs	=	Span # 1

Maximum Deflection

Max Downward Transient Deflection	0.658 in	Ratio =	255 >=240.
Max Upward Transient Deflection	0.000 in	Ratio =	0 <240.0
Max Downward Total Deflection	0.697 in	Ratio =	240 >=240.
Max Upward Total Deflection	0.000 in	Ratio =	0 <240.0

Vertical Reactions

Support notation : Far left is #1 Values in KIPS

Load Combination	Support 1	Support 2
Overall MAXimum	2.605	2.605
Overall MINimum	0.088	0.088
D Only	0.147	0.147
+D+Lr	0.333	0.333
+D+S	2.605	2.605
+D+0.750Lr	0.287	0.287
+D+0.750S	1.990	1.990
+0.60D	0.088	0.088
Lr Only	0.186	0.186
S Only	2.458	2.458

RICHMOND HOFFMAYER INC.
STRUCTURAL ENGINEERING

Project Title: VILLAGE NEST
Engineer: JJH
Project Descr: MULTI UNIT PROJECT

Project ID: 2017-0610

7

Printed: 20 JUN 2017, 8:39AM

Wood Beam

File = d:\ENERCALC Projects\2017-0610.ec6
ENERCALC, INC. 1983-2017, Build:6.17.3.17, Ver:6.17.3.17

Lic. # : KW-06002886
Licensee : RICHMOND HOFFMAYER

Description : B1B - RAFTERS

CODE REFERENCES

Calculations per NDS 2015, IBC 2015, CBC 2016, ASCE 7-10
Load Combination Set : ASCE 7-10

Material Properties

Analysis Method : Allowable Stress Design
Load Combination : ASCE 7-10

Wood Species : Trus Joist
Wood Grade : MicroLam LVL 1.9 E

Beam Bracing : Beam is Fully Braced against lateral-torsional buckling

Fb - Tension	2,600.0 psi
Fb - Compr	2,600.0 psi
Fc - Prll	2,510.0 psi
Fc - Perp	750.0 psi
Fv	285.0 psi
Ft	1,555.0 psi

E : Modulus of Elasticity

Ebend- xx	1,900.0 ksi
Eminbend - xx	965.71 ksi
Density	42.0 pcf

Repetitive Member Stress Increase

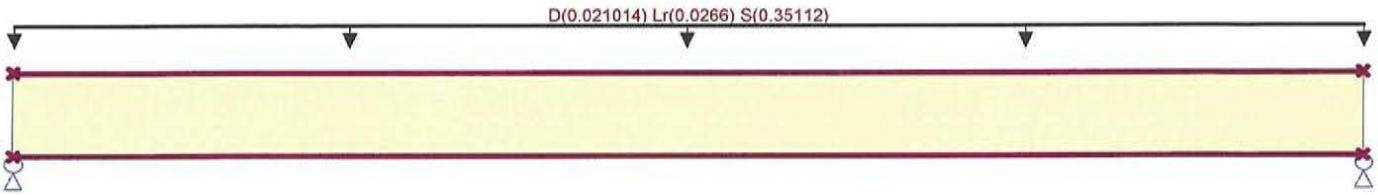

Applied Loads

Service loads entered. Load Factors will be applied for calculations.

Uniform Load : D = 0.01580, Lr = 0.020, S = 0.2640 ksf, Tributary Width = 1.330 ft, (ROOF LOADS)

DESIGN SUMMARY

Design OK

Maximum Bending Stress Ratio	=	0.444 : 1	Maximum Shear Stress Ratio	=	0.267 : 1
Section used for this span		2-1.75x11.87	Section used for this span		2-1.75x11.87
fb : Actual	=	1,526.82 psi	fv : Actual	=	87.49 psi
FB : Allowable	=	3,438.50 psi	Fv : Allowable	=	327.75 psi
Load Combination		+D+S	Load Combination		+D+S
Location of maximum on span	=	7.500 ft	Location of maximum on span	=	14.015 ft
Span # where maximum occurs	=	Span # 1	Span # where maximum occurs	=	Span # 1

Maximum Deflection

Max Downward Transient Deflection	0.434 in	Ratio =	415 >=240.
Max Upward Transient Deflection	0.000 in	Ratio =	0 <240.0
Max Downward Total Deflection	0.459 in	Ratio =	391 >=240.
Max Upward Total Deflection	0.000 in	Ratio =	0 <240.0

Vertical Reactions

Support notation : Far left is #1 Values in KIPS

Load Combination	Support 1	Support 2
Overall MAXimum	2.791	2.791
Overall MINimum	0.095	0.095
D Only	0.158	0.158
+D+Lr	0.357	0.357
+D+S	2.791	2.791
+D+0.750Lr	0.307	0.307
+D+0.750S	2.133	2.133
+0.60D	0.095	0.095
Lr Only	0.200	0.200
S Only	2.633	2.633

Wood Beam

File = d:\ENERCALC Projects\2017-0610.ec6
ENERCALC, INC. 1983-2017, Build:6.17.3.17, Ver:6.17.3.17
Lic. # : KW-06002886
Licensee : RICHMOND HOFFMAYER

Description : B1C - RAFTERS w OVERHANG

CODE REFERENCES

Calculations per NDS 2015, IBC 2015, CBC 2016, ASCE 7-10
Load Combination Set : ASCE 7-10

Material Properties

Analysis Method : Allowable Stress Design
Load Combination : ASCE 7-10

Wood Species : Trus Joist
Wood Grade : MicroLam LVL 1.9 E

Beam Bracing : Beam is Fully Braced against lateral-torsional buckling

Fb - Tension	2,600.0 psi
Fb - Compr	2,600.0 psi
Fc - Prll	2,510.0 psi
Fc - Perp	750.0 psi
Fv	285.0 psi
Ft	1,555.0 psi

E : Modulus of Elasticity

Ebend- xx	1,900.0 ksi
Eminbend - xx	965.71 ksi
Density	42.0 pcf

Repetitive Member Stress Increase

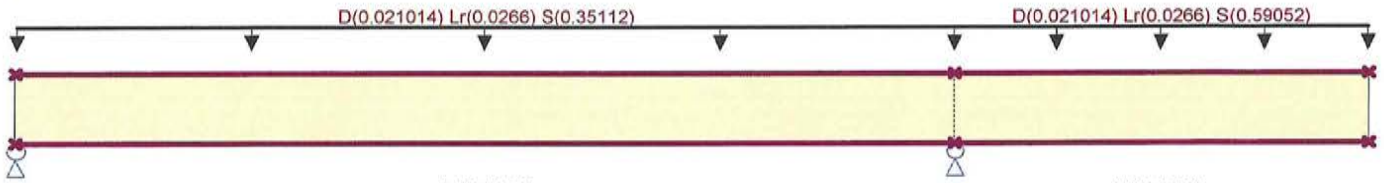

Applied Loads

Service loads entered. Load Factors will be applied for calculations.

Load for Span Number 1
Uniform Load : D = 0.01580, Lr = 0.020, S = 0.2640 ksf, Tributary Width = 1.330 ft, (ROOF LOADS)
Load for Span Number 2
Uniform Load : D = 0.01580, Lr = 0.020, S = 0.4440 ksf, Tributary Width = 1.330 ft, (ROOF LOADS)

DESIGN SUMMARY

Design OK

Maximum Bending Stress Ratio	=	0.785 : 1	Maximum Shear Stress Ratio	=	0.608 : 1
Section used for this span		1.75x11.87	Section used for this span		1.75x11.87
fb : Actual	=	2,698.63 psi	fv : Actual	=	199.37 psi
FB : Allowable	=	3,438.50 psi	Fv : Allowable	=	327.75 psi
Load Combination		+D+S	Load Combination		+D+S
Location of maximum on span	=	12.500 ft	Location of maximum on span	=	12.500 ft
Span # where maximum occurs	=	Span # 1	Span # where maximum occurs	=	Span # 1

Maximum Deflection

Max Downward Transient Deflection	0.428 in	Ratio =	308 >=240.
Max Upward Transient Deflection	-0.044 in	Ratio =	2976 >=240.
Max Downward Total Deflection	0.429 in	Ratio =	306 >=240.
Max Upward Total Deflection	-0.043 in	Ratio =	3046 >=240.

Vertical Reactions

Support notation : Far left is #1 Values in KIPS

Load Combination	Support 1	Support 2	Support 3
Overall MAXimum	1.586	6.429	
Overall MINimum	-0.032	0.163	
D Only	0.106	0.272	
+D+Lr, LL Comb Run (*L)	0.074	0.451	
+D+Lr, LL Comb Run (L*)	0.272	0.439	
+D+Lr, LL Comb Run (LL)	0.240	0.617	
+D+S	1.586	6.429	
+D+0.750Lr, LL Comb Run (*L)	0.082	0.406	
+D+0.750Lr, LL Comb Run (L*)	0.231	0.397	
+D+0.750Lr, LL Comb Run (LL)	0.206	0.531	

Wood Beam

File = d:\ENERCALC Projects\2017-0610.ec6
ENERCALC, INC. 1983-2017, Build:6.17.3.17, Ver:6.17.3.17
Lic. # : KW-06002886
Licensee : RICHMOND HOFFMAYER

Description : B1C - RAFTERS w OVERHANG

Vertical Reactions

Support notation : Far left is #1 Values in KIPS

Load Combination	Support 1	Support 2	Support 3
+D+0.750S	1.216	4.890	
+0.60D	0.064	0.163	
Lr Only, LL Comb Run (*L)	-0.032	0.178	
Lr Only, LL Comb Run (L*)	0.166	0.166	
Lr Only, LL Comb Run (LL)	0.134	0.345	
S Only	1.480	6.157	

Wood Beam

File = d:\ENERCALC Projects\2017-0610.ec6
ENERCALC, INC. 1983-2017, Build:6.17.3.17, Ver:6.17.3.17
Lic. # : KW-06002886
Licensee : RICHMOND HOFFMAYER

Description : B2 - ROOF BEAM

CODE REFERENCES

Calculations per NDS 2015, IBC 2015, CBC 2016, ASCE 7-10
Load Combination Set : ASCE 7-10

Material Properties

Analysis Method : Allowable Stress Design
Load Combination : ASCE 7-10

Wood Species : Trus Joist
Wood Grade : Parallam PSL 2.0E

Beam Bracing : Beam is Fully Braced against lateral-torsional buckling

Fb - Tension	2,900.0 psi
Fb - Compr	2,900.0 psi
Fc - Prll	2,900.0 psi
Fc - Perp	625.0 psi
Fv	290.0 psi
Ft	2,025.0 psi

E : Modulus of Elasticity

Ebend- xx	2,000.0 ksi
Eminbend - xx	1,016.54 ksi
Density	45.050 pcf

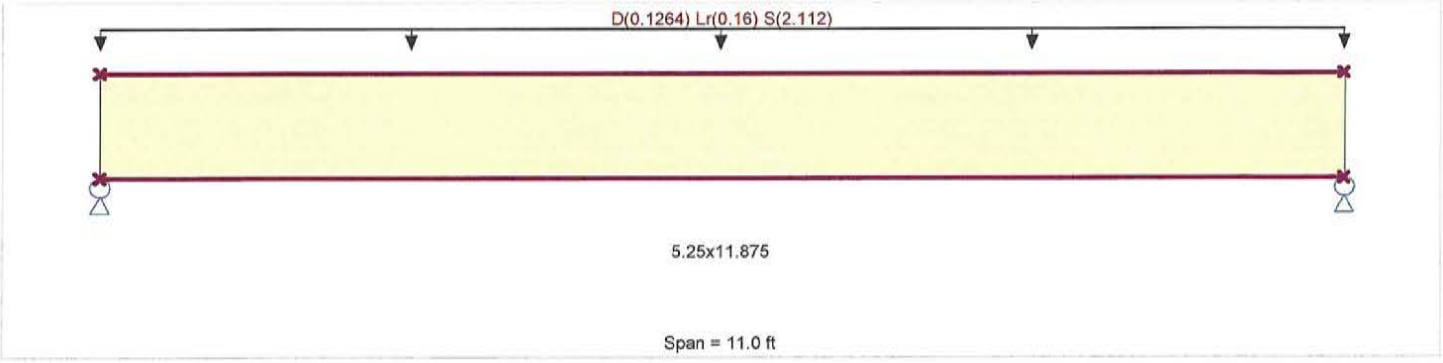

Applied Loads

Service loads entered. Load Factors will be applied for calculations.

Beam self weight calculated and added to loads
Uniform Load : D = 0.01580, Lr = 0.020, S = 0.2640 ksf, Tributary Width = 8.0 ft, (ROOF)

DESIGN SUMMARY

Design OK

Maximum Bending Stress Ratio	=	0.996 : 1	Maximum Shear Stress Ratio	=	0.739 : 1
Section used for this span		5.25x11.875	Section used for this span		5.25x11.875
fb : Actual	=	3,321.29 psi	fv : Actual	=	246.45 psi
FB : Allowable	=	3,335.00 psi	Fv : Allowable	=	333.50 psi
Load Combination		+D+S	Load Combination		+D+S
Location of maximum on span	=	5.500 ft	Location of maximum on span	=	10.036 ft
Span # where maximum occurs	=	Span # 1	Span # where maximum occurs	=	Span # 1

Maximum Deflection

Max Downward Transient Deflection	0.478 in	Ratio =	276 >=240.
Max Upward Transient Deflection	0.000 in	Ratio =	0 <240.0
Max Downward Total Deflection	0.511 in	Ratio =	258 >=240.
Max Upward Total Deflection	0.000 in	Ratio =	0 <240.0

Vertical Reactions

Support notation : Far left is #1 Values in KIPS

Load Combination	Support 1	Support 2
Overall MAXimum	12.418	12.418
Overall MINimum	0.481	0.481
D Only	0.802	0.802
+D+Lr	1.682	1.682
+D+S	12.418	12.418
+D+0.750Lr	1.462	1.462
+D+0.750S	9.514	9.514
+0.60D	0.481	0.481
Lr Only	0.880	0.880
S Only	11.616	11.616

RICHMOND HOFFMAYER INC.
STRUCTURAL ENGINEERING

Project Title: VILLAGE NEST
Engineer: JJH
Project Descr: MULTI UNIT PROJECT

Project ID: 2017-0610

//

Printed: 20 JUN 2017, 8:40AM

Wood Beam

File = d:\ENERCALC Projects\2017-0610.ec6
ENERCALC, INC. 1983-2017, Build:6.17.3.17, Ver:6.17.3.17

Lic. # : KW-06002886 — Licensee : RICHMOND HOFFMAYER

Description : B3 - ROOF BEAM

CODE REFERENCES

Calculations per NDS 2015, IBC 2015, CBC 2016, ASCE 7-10
Load Combination Set : ASCE 7-10

Material Properties

Analysis Method : Allowable Stress Design
Load Combination : ASCE 7-10

Wood Species : Trus Joist
Wood Grade : Parallam PSL 2.0E

Fb - Tension	2,900.0 psi
Fb - Compr	2,900.0 psi
Fc - Prll	2,900.0 psi
Fc - Perp	625.0 psi
Fv	290.0 psi
Ft	2,025.0 psi

E : Modulus of Elasticity

Ebend- xx	2,000.0 ksi
Eminbend - xx	1,016.54 ksi
Density	45.050 pcf

Beam Bracing : Beam is Fully Braced against lateral-torsional buckling

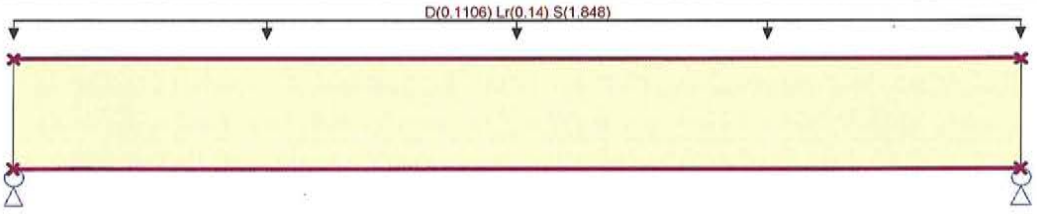

Applied Loads

Service loads entered. Load Factors will be applied for calculations.

Beam self weight calculated and added to loads
Uniform Load : D = 0.01580, Lr = 0.020, S = 0.2640 ksf, Tributary Width = 7.0 ft, (ROOF)

DESIGN SUMMARY

Design OK

Maximum Bending Stress Ratio	=	0.521 : 1	Maximum Shear Stress Ratio	=	0.469 : 1
Section used for this span		5.25x11.875	Section used for this span		5.25x11.875
fb : Actual	=	1,737.41 psi	fv : Actual	=	156.50 psi
FB : Allowable	=	3,335.00 psi	Fv : Allowable	=	333.50 psi
Load Combination		+D+S	Load Combination		+D+S
Location of maximum on span	=	4.250 ft	Location of maximum on span	=	0.000 ft
Span # where maximum occurs	=	Span # 1	Span # where maximum occurs	=	Span # 1

Maximum Deflection

Max Downward Transient Deflection	0.149 in	Ratio =	684 >=240.
Max Upward Transient Deflection	0.000 in	Ratio =	0 <240.0
Max Downward Total Deflection	0.159 in	Ratio =	639 >=240.
Max Upward Total Deflection	0.000 in	Ratio =	0 <240.0

Vertical Reactions

Support notation : Far left is #1 — Values in KIPS

Load Combination	Support 1	Support 2
Overall MAXimum	8.407	8.407
Overall MINimum	0.332	0.332
D Only	0.553	0.553
+D+Lr	1.148	1.148
+D+S	8.407	8.407
+D+0.750Lr	0.999	0.999
+D+0.750S	6.443	6.443
+0.60D	0.332	0.332
Lr Only	0.595	0.595
S Only	7.854	7.854

Wood Beam

File = d:\ENERCALC Projects\2017-0610.ec6
ENERCALC, INC. 1983-2017, Build:6.17.3.17, Ver:6.17.3.17
Lic. # : KW-06002886
Licensee : RICHMOND HOFFMAYER

Description : B4 - RIDGE

CODE REFERENCES

Calculations per NDS 2015, IBC 2015, CBC 2016, ASCE 7-10
Load Combination Set : ASCE 7-10

Material Properties

Analysis Method : Allowable Stress Design
Load Combination : ASCE 7-10

Wood Species : Trus Joist
Wood Grade : Parallam PSL 2.0E

Beam Bracing : Beam is Fully Braced against lateral-torsional buckling

Fb - Tension	2,900.0 psi
Fb - Compr	2,900.0 psi
Fc - Prll	2,900.0 psi
Fc - Perp	625.0 psi
Fv	290.0 psi
Ft	2,025.0 psi

E : Modulus of Elasticity

Ebend- xx	2,000.0 ksi
Eminbend - xx	1,016.54 ksi
Density	45.050 pcf

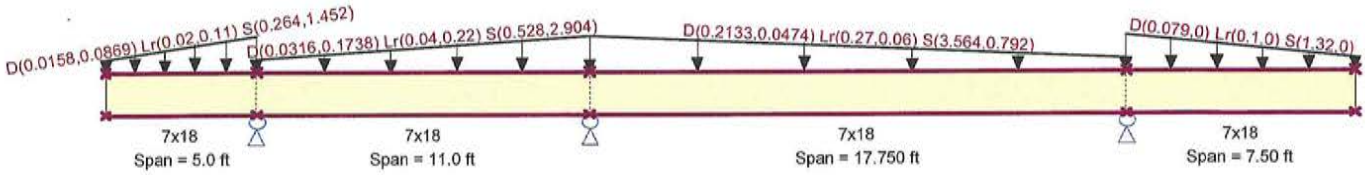

Applied Loads

Service loads entered. Load Factors will be applied for calculations.

Beam self weight calculated and added to loads
Load for Span Number 1
Varying Uniform Load : D(S,E) = 0.01580->0.01580, Lr(S,E) = 0.020->0.020, S(S,E) = 0.2640->0.2640 ksf, Extent = 0.0 -->> 5.0 ft, Trib Width = 1.0->5.50 ft, (
Load for Span Number 2
Varying Uniform Load : D(S,E) = 0.01580->0.01580, Lr(S,E) = 0.020->0.020, S(S,E) = 0.2640->0.2640 ksf, Extent = 0.0 -->> 11.0 ft, Trib Width = 2.0->11.0 ft,
Load for Span Number 3
Varying Uniform Load : D(S,E) = 0.01580->0.01580, Lr(S,E) = 0.020->0.020, S(S,E) = 0.2640->0.2640 ksf, Extent = 0.0 -->> 17.750 ft, Trib Width = 13.50->3.
Load for Span Number 4
Varying Uniform Load : D(S,E) = 0.01580->0.01580, Lr(S,E) = 0.020->0.020, S(S,E) = 0.2640->0.2640 ksf, Extent = 0.0 -->> 7.50 ft, Trib Width = 5.0->0.0 ft, (

DESIGN SUMMARY

Design OK

Maximum Bending Stress Ratio	=	0.643 1	Maximum Shear Stress Ratio	=	0.822 : 1
Section used for this span		7x18	Section used for this span		7x18
fb : Actual	=	2,049.11 psi	fv : Actual	=	274.07 psi
FB : Allowable	=	3,188.23 psi	Fv : Allowable	=	333.50 psi
Load Combination		+D+S	Load Combination		+D+S
Location of maximum on span	=	11.000 ft	Location of maximum on span	=	11.000 ft
Span # where maximum occurs	=	Span # 2	Span # where maximum occurs	=	Span # 2

Maximum Deflection

Max Downward Transient Deflection	0.357 in	Ratio =	597 >=360
Max Upward Transient Deflection	-0.412 in	Ratio =	436 >=360
Max Downward Total Deflection	0.382 in	Ratio =	558 >=240.
Max Upward Total Deflection	-0.433 in	Ratio =	414 >=240.

Vertical Reactions

Support notation : Far left is #1 Values in KIPS

Load Combination	Support 1	Support 2	Support 3	Support 4	Support 5
Overall MAXimum		7.627	45.573	19.198	
Overall MINimum		0.012	-0.074	0.007	
D Only		0.799	3.111	1.712	
+D+Lr, LL Comb Run (***L)		0.825	3.016	2.156	

Wood Beam

Description : B4 - RIDGE

Vertical Reactions

Support notation : Far left is #1 Values in KIPS

Load Combination	Support 1	Support 2	Support 3	Support 4	Support 5
+D+Lr, LL Comb Run (**L*)		0.419	5.502	2.630	
+D+Lr, LL Comb Run (**LL)		0.445	5.407	3.074	
+D+Lr, LL Comb Run (*L**)		1.278	4.107	1.668	
+D+Lr, LL Comb Run (*L*L)		1.304	4.012	2.112	
+D+Lr, LL Comb Run (*LL*)		0.897	6.498	2.586	
+D+Lr, LL Comb Run (*LLL)		0.924	6.402	3.030	
+D+Lr, LL Comb Run (L***)		1.192	3.037	1.719	
+D+Lr, LL Comb Run (L**L)		1.218	2.941	2.163	
+D+Lr, LL Comb Run (L*L*)		0.812	5.428	2.637	
+D+Lr, LL Comb Run (L*LL)		0.838	5.332	3.081	
+D+Lr, LL Comb Run (LL**)		1.670	4.033	1.675	
+D+Lr, LL Comb Run (LL*L)		1.697	3.937	2.119	
+D+Lr, LL Comb Run (LLL*)		1.290	6.423	2.593	
+D+Lr, LL Comb Run (LLLL)		1.316	6.328	3.037	
+D+S		7.627	45.573	19.198	
+D+0.750Lr, LL Comb Run (***L)		0.819	3.040	2.045	
+D+0.750Lr, LL Comb Run (**L*)		0.514	4.904	2.401	
+D+0.750Lr, LL Comb Run (**LL)		0.534	4.833	2.734	
+D+0.750Lr, LL Comb Run (*L**)		1.158	3.858	1.679	
+D+0.750Lr, LL Comb Run (*L*L)		1.178	3.786	2.012	
+D+0.750Lr, LL Comb Run (*LL*)		0.873	5.651	2.368	
+D+0.750Lr, LL Comb Run (*LLL)		0.893	5.580	2.701	
+D+0.750Lr, LL Comb Run (L***)		1.094	3.055	1.717	
+D+0.750Lr, LL Comb Run (L**L)		1.113	2.984	2.050	
+D+0.750Lr, LL Comb Run (L*L*)		0.809	4.848	2.406	
+D+0.750Lr, LL Comb Run (L*LL)		0.828	4.777	2.739	
+D+0.750Lr, LL Comb Run (LL**)		1.452	3.802	1.684	
+D+0.750Lr, LL Comb Run (LL*L)		1.472	3.731	2.017	
+D+0.750Lr, LL Comb Run (LLL*)		1.167	5.595	2.373	
+D+0.750Lr, LL Comb Run (LLLL)		1.187	5.524	2.706	
+D+0.750S		5.920	34.958	14.826	
+0.60D		0.479	1.867	1.027	
Lr Only, LL Comb Run (***L)		0.026	-0.095	0.444	
Lr Only, LL Comb Run (**L*)		-0.380	2.391	0.918	
Lr Only, LL Comb Run (**LL)		-0.354	2.295	1.362	
Lr Only, LL Comb Run (*L**)		0.478	0.996	-0.044	
Lr Only, LL Comb Run (*L*L)		0.505	0.900	0.400	
Lr Only, LL Comb Run (*LL*)		0.098	3.387	0.874	
Lr Only, LL Comb Run (*LLL)		0.125	3.291	1.318	
Lr Only, LL Comb Run (L***)		0.393	-0.074	0.007	
Lr Only, LL Comb Run (L**L)		0.419	-0.170	0.451	
Lr Only, LL Comb Run (L*L*)		0.012	2.316	0.925	
Lr Only, LL Comb Run (L*LL)		0.039	2.221	1.369	
Lr Only, LL Comb Run (LL**)		0.871	0.921	-0.038	
Lr Only, LL Comb Run (LL*L)		0.897	0.826	0.407	
Lr Only, LL Comb Run (LLL*)		0.491	3.312	0.881	
Lr Only, LL Comb Run (LLLL)		0.517	3.217	1.325	
S Only		6.828	42.462	17.485	

UNBALANCED LOADING CHECK

RICHMOND HOFFMAYER INC.
STRUCTURAL ENGINEERING

Project Title: VILLAGE NEST
Engineer: JJH
Project Descr: MULTI UNIT PROJECT

Project ID: 2017-0610
14

Printed: 20 JUN 2017, 8:40AM

Wood Beam

File = d:\ENERCALC Projects\2017-0610.ec6
ENERCALC, INC. 1983-2017, Build:6.17.3.17, Ver:6.17.3.17

Lic. # : KW-06002886 — Licensee : RICHMOND HOFFMAYER

Description : B5 - BIG OPENING

CODE REFERENCES

Calculations per NDS 2015, IBC 2015, CBC 2016, ASCE 7-10
Load Combination Set : ASCE 7-10

Material Properties

Analysis Method : Allowable Stress Design
Load Combination : ASCE 7-10

Wood Species : DF/DF
Wood Grade : 24F - V4

Beam Bracing : Beam is Fully Braced against lateral-torsional buckling

Fb - Tension	2,400.0 psi
Fb - Compr	1,850.0 psi
Fc - Prll	1,650.0 psi
Fc - Perp	650.0 psi
Fv	265.0 psi
Ft	1,100.0 psi

E : Modulus of Elasticity

Ebend- xx	1,800.0 ksi
Eminbend - xx	950.0 ksi
Ebend- yy	1,600.0 ksi
Eminbend - yy	850.0 ksi
Density	31.20 pcf

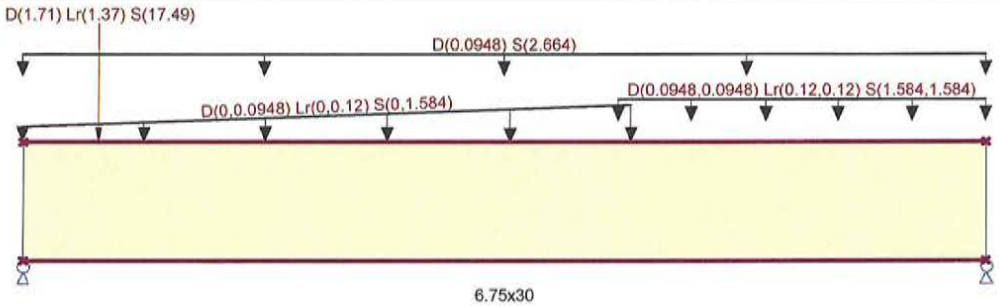

Applied Loads

Service loads entered. Load Factors will be applied for calculations.

Beam self weight calculated and added to loads
Load for Span Number 1
Varying Uniform Load : D(S,E) = 0.01580->0.01580, Lr(S,E) = 0.020->0.020, S(S,E) = 0.2640->0.2640 ksf, Extent = 0.0 -->> 12.0 ft, Trib Width = 0.0->6.0 ft, (
Varying Uniform Load : D(S,E) = 0.01580->0.01580, Lr(S,E) = 0.020->0.020, S(S,E) = 0.2640->0.2640 ksf, Extent = 11.750 -->> 19.0 ft, Trib Width = 6.0 ft, (R
Uniform Load : D = 0.01580, S = 0.4440 ksf, Tributary Width = 6.0 ft, (EAVE)
Point Load : D = 1.710, Lr = 1.370, S = 17.490 k @ 1.50 ft, (B4)

DESIGN SUMMARY

Design OK

Maximum Bending Stress Ratio	=	0.950 : 1	Maximum Shear Stress Ratio	=	0.755 : 1
Section used for this span		6.75x30	Section used for this span		6.75x30
fb : Actual	=	2,350.85 psi	fv : Actual	=	229.96 psi
FB : Allowable	=	2,474.58 psi	Fv : Allowable	=	304.75 psi
Load Combination		+D+S	Load Combination		+D+S
Location of maximum on span	=	9.569 ft	Location of maximum on span	=	16.504 ft
Span # where maximum occurs	=	Span # 1	Span # where maximum occurs	=	Span # 1

Maximum Deflection

Max Downward Transient Deflection	0.453 in	Ratio =	503 >=360
Max Upward Transient Deflection	0.000 in	Ratio =	0 <360
Max Downward Total Deflection	0.479 in	Ratio =	475 >=240.
Max Upward Total Deflection	0.000 in	Ratio =	0 <240.0

Vertical Reactions

Support notation : Far left is #1 — Values in KIPS

Load Combination	Support 1	Support 2
Overall MAXimum	52.463	42.232
Overall MINimum	1.845	1.115
D Only	3.353	2.248
+D+Lr	5.198	3.363
+D+S	52.463	42.232
+D+0.750Lr	4.736	3.085
+D+0.750S	40.186	32.236
+0.60D	2.012	1.349

Wood Beam

Description : B5 - BIG OPENING

Vertical Reactions

Support notation : Far left is #1 Values in KIPS

Load Combination	Support 1	Support 2
Lr Only	1.845	1.115
S Only	49.111	39.983

RICHMOND HOFFMAYER INC.
STRUCTURAL ENGINEERING

Project Title: VILLAGE NEST
Engineer: JJH
Project Descr: MULTI UNIT PROJECT

Project ID: 2017-0610
15.1

Printed: 20 JUN 2017, 10:31AM

Steel Beam

File = d:\ENERCALC Projects\2017-0610.ec6
ENERCALC, INC. 1983-2017, Build:6.17.3.17, Ver:6.17.3.17
Lic. # : KW-06002886 — Licensee : RICHMOND HOFFMAYER

Description : B5 - BIG OPENING - STEEL OPTION

CODE REFERENCES

Calculations per AISC 360-10, IBC 2015, ASCE 7-10
Load Combination Set : ASCE 7-10

Material Properties

Analysis Method : Allowable Strength Design
Beam Bracing : Completely Unbraced
Bending Axis : Major Axis Bending

Fy : Steel Yield : 46.0 ksi
E: Modulus : 29,000.0 ksi

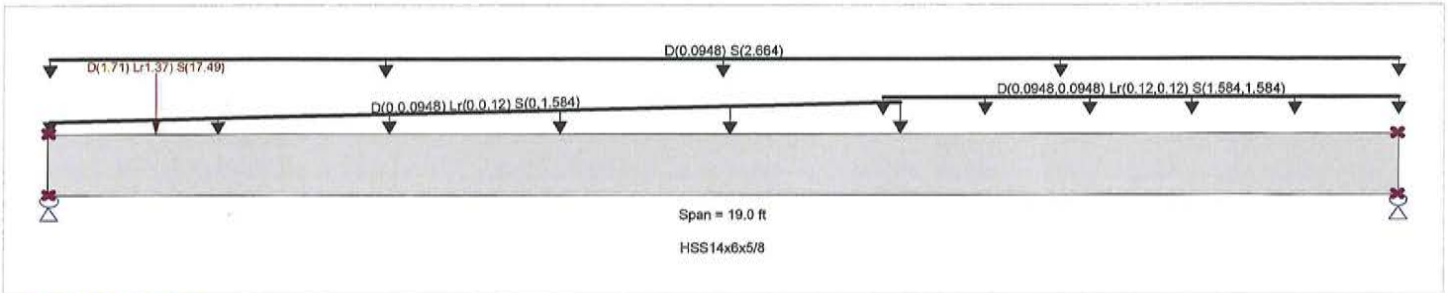

Applied Loads

Service loads entered. Load Factors will be applied for calculations.

Beam self weight calculated and added to loading
Load for Span Number 1
Varying Uniform Load : D(S,E) = 0.01580->0.01580, Lr(S,E) = 0.020->0.020, S(S,E) = 0.2640->0.2640 ksf, Extent = 0.0 –>> 12.0 ft, Trib Width = 0.
Varying Uniform Load : D(S,E) = 0.01580->0.01580, Lr(S,E) = 0.020->0.020, S(S,E) = 0.2640->0.2640 ksf, Extent = 11.750 –>> 19.0 ft, Trib Width =
Uniform Load : D = 0.01580, S = 0.4440 ksf, Tributary Width = 6.0 ft, (EAVE)
Point Load : D = 1.710, Lr = 1.370, S = 17.490 k @ 1.50 ft, (B4)

DESIGN SUMMARY

Design OK

Maximum Bending Stress Ratio =	0.981 : 1	Maximum Shear Stress Ratio =	0.224 : 1
Section used for this span	HSS14x6x5/8	Section used for this span	HSS14x6x5/8
Ma : Applied	199.816 k-ft	Va : Applied	52.772 k
Mn / Omega : Allowable	203.603 k-ft	Vn/Omega : Allowable	235.387 k
Load Combination	+D+S	Load Combination	+D+S
Location of maximum on span	9.554ft	Location of maximum on span	0.000 ft
Span # where maximum occurs	Span # 1	Span # where maximum occurs	Span # 1

Maximum Deflection

Max Downward Transient Deflection	0.891 in	Ratio =	255 >=240.
Max Upward Transient Deflection	0.000 in	Ratio =	0 <240.0
Max Downward Total Deflection	0.951 in	Ratio =	240 >=240.
Max Upward Total Deflection	0.000 in	Ratio =	0 <240.0

Maximum Forces & Stresses for Load Combinations

Load Combination / Segment Length	Span #	Max Stress Ratios M	V	Summary of Moment Values Mmax +	Mmax -	Ma Max	Mnx	Mnx/Omega	Cb	Rm	Summary of Shear Values Va Max	Vnx	Vnx/Omega
D Only													
Dsgn. L = 19.00 ft	1	0.060	0.016	12.25		12.25	340.02	203.60	1.12	1.00	3.66	393.10	235.39
+D+Lr													
Dsgn. L = 19.00 ft	1	0.085	0.023	17.39		17.39	340.02	203.60	1.12	1.00	5.51	393.10	235.39
+D+S													
Dsgn. L = 19.00 ft	1	0.981	0.224	199.82		199.82	340.02	203.60	1.13	1.00	52.77	393.10	235.39
+D+0.750Lr													
Dsgn. L = 19.00 ft	1	0.079	0.021	16.10		16.10	340.02	203.60	1.12	1.00	5.04	393.10	235.39
+D+0.750S													
Dsgn. L = 19.00 ft	1	0.751	0.172	152.92		152.92	340.02	203.60	1.13	1.00	40.49	393.10	235.39
+0.60D													
Dsgn. L = 19.00 ft	1	0.036	0.009	7.35		7.35	340.02	203.60	1.12	1.00	2.20	393.10	235.39

Overall Maximum Deflections

Load Combination	Span	Max. "-" Defl	Location in Span	Load Combination	Max. "+" Defl	Location in Span
+D+S	1	0.9512	9.500		0.0000	0.000

Vertical Reactions

Support notation : Far left is #1 — Values in KIPS

Load Combination	Support 1	Support 2
Overall MAXimum	52.772	42.540
Overall MINimum	1.845	1.115

RICHMOND HOFFMAYER INC.
STRUCTURAL ENGINEERING

Project Title: VILLAGE NEST
Engineer: JJH
Project Descr: MULTI UNIT PROJECT

Project ID: 2017-0610

B5.2

Printed: 20 JUN 2017, 10:31AM

Steel Beam

File = d:\ENERCALC Projects\2017-0610.ec6
ENERCALC, INC. 1983-2017, Build:6.17.3.17, Ver:6.17.3.17

Lic. # : KW-06002886 Licensee : RICHMOND HOFFMAYER

Description : B5 - BIG OPENING - STEEL OPTION

Vertical Reactions

Support notation : Far left is #1 Values in KIPS

Load Combination	Support 1	Support 2
D Only	3.661	2.556
+D+Lr	5.506	3.672
+D+S	52.772	42.540
+D+0.750Lr	5.045	3.393
+D+0.750S	40.494	32.544
+0.60D	2.197	1.534
Lr Only	1.845	1.115
S Only	49.111	39.983

RICHMOND HOFFMAYER INC.
STRUCTURAL ENGINEERING

Project Title: VILLAGE NEST
Engineer: JJH
Project Descr: MULTI UNIT PROJECT

Project ID: 2017-0610
16

Printed: 20 JUN 2017, 8:51AM

Wood Beam

File = d:\ENERCALC Projects\2017-0610.ec6
ENERCALC, INC. 1983-2017, Build:6.17.3.17, Ver:6.17.3.17

Lic. # : KW-06002886 — Licensee : RICHMOND HOFFMAYER

Description : B6 - HEADER

CODE REFERENCES

Calculations per NDS 2015, IBC 2015, CBC 2016, ASCE 7-10
Load Combination Set : ASCE 7-10

Material Properties

Analysis Method : Allowable Stress Design
Load Combination ASCE 7-10

Wood Species : Trus Joist
Wood Grade : MicroLam LVL 1.9 E

Beam Bracing : Completely Unbraced

Fb - Tension	2600 psi
Fb - Compr	2600 psi
Fc - Prll	2510 psi
Fc - Perp	750 psi
Fv	285 psi
Ft	1555 psi

E : Modulus of Elasticity

Ebend- xx	1900 ksi
Eminbend - xx	965.71 ksi
Density	42 pcf

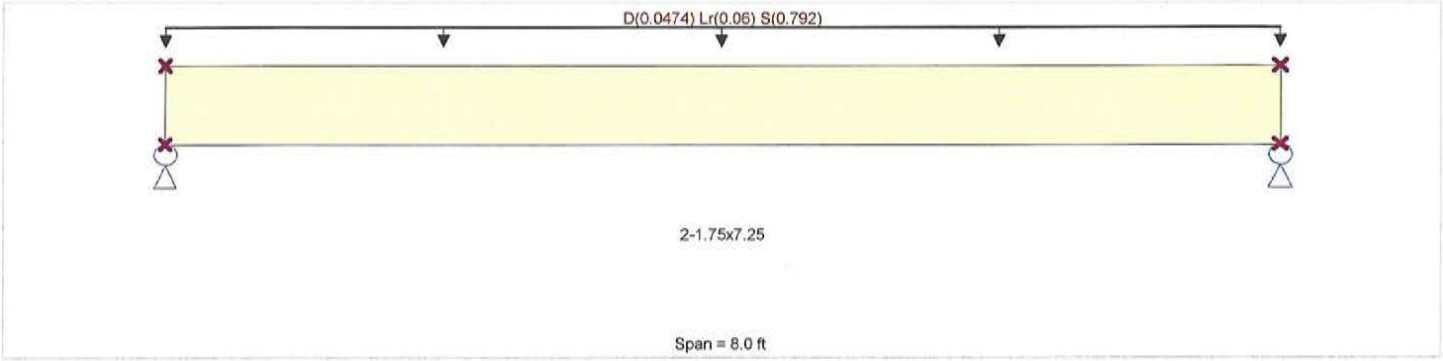

Applied Loads

Service loads entered. Load Factors will be applied for calculations.

Uniform Load : D = 0.01580, Lr = 0.020, S = 0.2640 ksf, Tributary Width = 3.0 ft, (ROOF)

DESIGN SUMMARY

Design OK

Maximum Bending Stress Ratio	=	0.895 : 1	Maximum Shear Stress Ratio	=	0.517 : 1
Section used for this span		2-1.75x7.25	Section used for this span		2-1.75x7.25
fb : Actual	=	2,628.13 psi	fv : Actual	=	169.50 psi
FB : Allowable	=	2,936.44 psi	Fv : Allowable	=	327.75 psi
Load Combination		+D+S	Load Combination		+D+S
Location of maximum on span	=	4.000 ft	Location of maximum on span	=	7.416 ft
Span # where maximum occurs	=	Span # 1	Span # where maximum occurs	=	Span # 1

Maximum Deflection

Max Downward Transient Deflection	0.348 in	Ratio =	276 >=240.
Max Upward Transient Deflection	0.000 in	Ratio =	0 <240.0
Max Downward Total Deflection	0.368 in	Ratio =	260 >=240.
Max Upward Total Deflection	0.000 in	Ratio =	0 <240.0

Vertical Reactions

Support notation : Far left is #1 — Values in KIPS

Load Combination	Support 1	Support 2
Overall MAXimum	3.358	3.358
Overall MINimum	0.114	0.114
D Only	0.190	0.190
+D+Lr	0.430	0.430
+D+S	3.358	3.358
+D+0.750Lr	0.370	0.370
+D+0.750S	2.566	2.566
+0.60D	0.114	0.114
Lr Only	0.240	0.240
S Only	3.168	3.168

RICHMOND HOFFMAYER INC.
STRUCTURAL ENGINEERING

Project Title: VILLAGE NEST
Engineer: JJH
Project Descr: MULTI UNIT PROJECT

Project ID: 2017-0610

17

Printed: 20 JUN 2017, 8:54AM

Wood Beam

File = d:\ENERCALC Projects\2017-0610.ec6
ENERCALC, INC. 1983-2017, Build:6.17.3.17, Ver:6.17.3.17

Lic. # : KW-06002886 — Licensee : RICHMOND HOFFMAYER

Description : B7 - BEARING HEADERS

CODE REFERENCES

Calculations per NDS 2015, IBC 2015, CBC 2016, ASCE 7-10
Load Combination Set : ASCE 7-10

Material Properties

Analysis Method : Allowable Stress Design
Load Combination : ASCE 7-10

Wood Species : Trus Joist
Wood Grade : MicroLam LVL 1.9 E

Beam Bracing : Completely Unbraced

Fb - Tension	2,600.0 psi
Fb - Compr	2,600.0 psi
Fc - Prll	2,510.0 psi
Fc - Perp	750.0 psi
Fv	285.0 psi
Ft	1,555.0 psi

E : Modulus of Elasticity

Ebend- xx	1,900.0 ksi
Eminbend - xx	965.71 ksi

Density 42.0 pcf

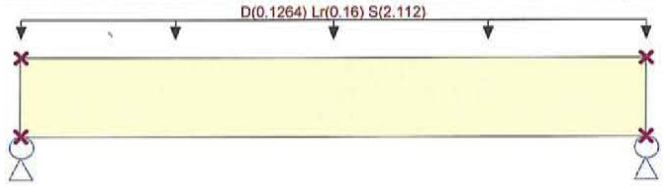

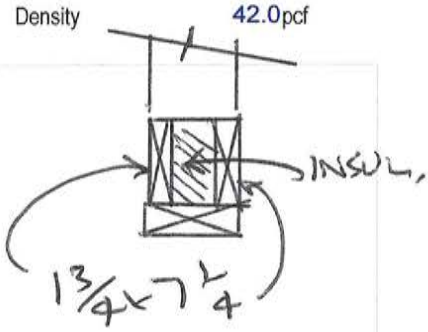

2-1.75x7.25

Span = 4.50 ft

Applied Loads

Service loads entered. Load Factors will be applied for calculations.

Uniform Load : D = 0.01580, Lr = 0.020, S = 0.2640 ksf, Tributary Width = 8.0 ft, (ROOF)

DESIGN SUMMARY

Design OK

Maximum Bending Stress Ratio	=	0.749 : 1	Maximum Shear Stress Ratio	=	0.670 : 1
Section used for this span		2-1.75x7.25	Section used for this span		2-1.75x7.25
fb : Actual	=	2,217.49 psi	fv : Actual	=	219.49 psi
FB : Allowable	=	2,960.54 psi	Fv : Allowable	=	327.75 psi
Load Combination		+D+S	Load Combination		+D+S
Location of maximum on span	=	2.250 ft	Location of maximum on span	=	3.909 ft
Span # where maximum occurs	=	Span # 1	Span # where maximum occurs	=	Span # 1

Maximum Deflection

Max Downward Transient Deflection	0.093 in	Ratio =	581 >=240.
Max Upward Transient Deflection	0.000 in	Ratio =	0 <240.0
Max Downward Total Deflection	0.098 in	Ratio =	548 >=240.
Max Upward Total Deflection	0.000 in	Ratio =	0 <240.0

Vertical Reactions

Support notation : Far left is #1 — Values in KIPS

Load Combination	Support 1	Support 2
Overall MAXimum	5.036	5.036
Overall MINimum	0.171	0.171
D Only	0.284	0.284
+D+Lr	0.644	0.644
+D+S	5.036	5.036
+D+0.750Lr	0.554	0.554
+D+0.750S	3.848	3.848
+0.60D	0.171	0.171
Lr Only	0.360	0.360
S Only	4.752	4.752

RICHMOND HOFFMAYER INC.
STRUCTURAL ENGINEERING

Project Title: VILLAGE NEST
Engineer: JJH
Project Descr: MULTI UNIT PROJECT

Project ID: 2017-0610
1e

Printed: 20 JUN 2017, 9:02AM

Wood Beam

File = d:\ENERCALC Projects\2017-0610.ec6
ENERCALC, INC. 1983-2017, Build:6.17.3.17, Ver:6.17.3.17
Licensee : RICHMOND HOFFMAYER
Lic. # : KW-06002886

Description : B8 - BEARING HEADERS

CODE REFERENCES

Calculations per NDS 2015, IBC 2015, CBC 2016, ASCE 7-10
Load Combination Set : ASCE 7-10

Material Properties

Analysis Method : Allowable Stress Design
Load Combination : ASCE 7-10

Wood Species : Trus Joist
Wood Grade : MicroLam LVL 1.9 E

Beam Bracing : Completely Unbraced

Fb - Tension	2,600.0 psi
Fb - Compr	2,600.0 psi
Fc - Prll	2,510.0 psi
Fc - Perp	750.0 psi
Fv	285.0 psi
Ft	1,555.0 psi

E : Modulus of Elasticity

Ebend- xx	1,900.0 ksi
Eminbend - xx	965.71 ksi
Density	42.0 pcf

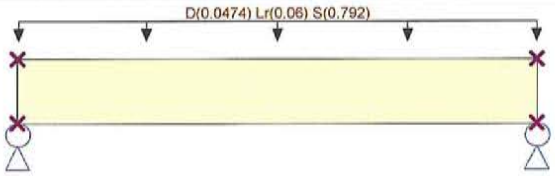

Applied Loads

Service loads entered. Load Factors will be applied for calculations.

Uniform Load : D = 0.01580, Lr = 0.020, S = 0.2640 ksf, Tributary Width = 3.0 ft, (ROOF)

DESIGN SUMMARY

Design OK

Maximum Bending Stress Ratio	=	0.603 : 1	Maximum Shear Stress Ratio	=	0.520 : 1
Section used for this span		1.75x5.5	Section used for this span		1.75x5.5
fb : Actual	=	1,748.17 psi	fv : Actual	=	170.44 psi
FB : Allowable	=	2,900.40 psi	Fv : Allowable	=	327.75 psi
Load Combination		+D+S	Load Combination		+D+S
Location of maximum on span	=	1.750 ft	Location of maximum on span	=	3.053 ft
Span # where maximum occurs	=	Span # 1	Span # where maximum occurs	=	Span # 1

Maximum Deflection

Max Downward Transient Deflection	0.058 in	Ratio =	719>=240.
Max Upward Transient Deflection	0.000 in	Ratio =	0<240.0
Max Downward Total Deflection	0.062 in	Ratio =	679>=240.
Max Upward Total Deflection	0.000 in	Ratio =	0<240.0

Vertical Reactions

Support notation : Far left is #1 Values in KIPS

Load Combination	Support 1	Support 2
Overall MAXimum	1.469	1.469
Overall MINimum	0.050	0.050
D Only	0.083	0.083
+D+Lr	0.188	0.188
+D+S	1.469	1.469
+D+0.750Lr	0.162	0.162
+D+0.750S	1.122	1.122
+0.60D	0.050	0.050
Lr Only	0.105	0.105
S Only	1.386	1.386

RICHMOND HOFFMAYER INC.
STRUCTURAL ENGINEERING

PROJECT	VILLAGE NEST	JOB	2017-0610
CLIENT	-		
ADDRESS	EDEN, UT		
DESIGN	HUUM		
ENGINEER	J.H.	DATE	5/14/2017
	RICHMOND PE 44628 HOFFMAYER SE 3435	SHEET	19 OF

WIND ON EXTERIOR WALLS:

115 MPH - EXP "C" ASCE 7-10

$W_{MN} = 16$ PSF

$q_z = 0.00256\, K_z K_{zt} K_d V^2$

$K_z = 0.9$ @ 20' TABLE 30.3-1

$K_{zt} = 1$

$K_d = 0.85$

$q_z = 0.00256(0.9 \times 1 \times 0.85) 115^2 = \underline{25.9 \text{ PSF}}$

$P = 25.9(GC_p - GC_{pi})$

$A_{STUD} = 10' \times 1.33' = 13.3 \text{ ft}^2 \longrightarrow GC_p = 1.0$

$GC_{pi} = 0.18$

$P = 25.9(1.0 + 0.18) = \underline{51.20 \text{ PSF}} > 16 \text{ PSF}$

ALL WALL CLADDING MUST RESIST $\underline{51.3 \text{ PSF}}$ WIND

4425 CANOGA AVENUE WOODLAND HILLS CA 91364
PHONE (818) 347-7008 FAX (818) 883-8869
Info@RichmondHoffmayer.com

RICHMOND HOFFMAYER INC.
STRUCTURAL ENGINEERING

Project Title: VILLAGE NEST
Engineer: JJH
Project Descr: MULTI UNIT PROJECT

Project ID: 2017-0610
20

Printed: 20 JUN 2017, 10:19AM

Wood Column

File = d:\ENERCALC Projects\2017-0610.ec6
ENERCALC, INC. 1983-2017, Build:6.17.3.17, Ver:6.17.3.17

Lic. # : KW-06002886 — Licensee : RICHMOND HOFFMAYER

Description : ROOF SUPPORT POSTS - EXTERIOR WALLS

Code References

Calculations per NDS 2015, IBC 2015, CBC 2016, ASCE 7-10
Load Combinations Used : ASCE 7-10

General Information

Analysis Method :	Allowable Stress Design
End Fixities	Top & Bottom Pinned
Overall Column Height	10.50 ft
(Used for non-slender calculations)	
Wood Species	Spruce - Pine - Fir
Wood Grade	No.1

Fb +	850.0 psi	Fv	125.0 psi
Fb -	850.0 psi	Ft	550.0 psi
Fc - Prll	700.0 psi	Density	26.210 pcf
Fc - Perp	425.0 psi		

E : Modulus of Elasticity . . .	x-x Bending	y-y Bending	Axial
Basic	1,300.0	1,300.0	1,300.0 ksi
Minimum	470.0	470.0	

Wood Section Name	4x8
Wood Grading/Manuf.	Graded Lumber
Wood Member Type	Sawn
Exact Width	3.50 in
Exact Depth	7.250 in
Area	25.375 in^2
Ix	111.148 in^4
Iy	25.904 in^4

Allow Stress Modification Factors

Cf or Cv for Bending	1.30
Cf or Cv for Compression	1.050
Cf or Cv for Tension	1.20
Cm : Wet Use Factor	1.0
Ct : Temperature Factor	1.0
Cfu : Flat Use Factor	1.0
Kf : Built-up columns	1.0 NDS 15.3.2
Use Cr : Repetitive ?	No

Brace condition for deflection (buckling) along columns :
X-X (width) axis : Fully braced against buckling along X-X Axis
Y-Y (depth) axis : Unbraced Length for X-X Axis buckling = 10 ft, K = 1.0

Applied Loads

Service loads entered. Load Factors will be applied for calculations.

Column self weight included : 48.495 lbs * Dead Load Factor
AXIAL LOADS . . .
ROOF SUPPORT: Axial Load at 10.50 ft, D = 1.50, Lr = 1.50, S = 15.0 k
BENDING LOADS . . .
WIND: Lat. Uniform Load creating Mx-x, W = 0.2050 k/ft

DESIGN SUMMARY

Bending & Shear Check Results

PASS Max. Axial+Bending Stress Ratio = 0.9256 : 1

Load Combination	+D+S
Governing NDS Forumla	Comp Only, fc/Fc'
Location of max.above base	0.0 ft
At maximum location values are . . .	
Applied Axial	16.549 k
Applied Mx	0.0 k-ft
Applied My	0.0 k-ft
Fc : Allowable	704.56 psi

PASS Maximum Shear Stress Ratio = 0.1272 : 1

Load Combination	+D+0.60W
Location of max.above base	0.0 ft
Applied Design Shear	38.172 psi
Allowable Shear	200.0 psi

Maximum SERVICE Lateral Load Reactions . .

Top along Y-Y	1.076 k	Bottom along Y-Y	1.076 k
Top along X-X	0.0 k	Bottom along X-X	0.0 k

Maximum SERVICE Load Lateral Deflections . . .

Along Y-Y 0.3922 in at 5.285 ft above base
for load combination : W Only
Along X-X 0.0 in at 0.0 ft above base
for load combination : n/a

Other Factors used to calculate allowable stresses . . .

	Bending	Compression	Tension

Load Combination Results

Load Combination	C_D	C_P	Maximum Axial + Bending Stress Ratios: Stress Ratio	Status	Location	Maximum Shear Ratios: Stress Ratio	Status	Location
D Only	0.900	0.877	0.1052	PASS	0.0 ft	0.0	PASS	10.50 ft
+D+Lr	1.250	0.815	0.1604	PASS	0.0 ft	0.0	PASS	10.50 ft
+D+S	1.150	0.834	0.9256	PASS	0.0 ft	0.0	PASS	10.50 ft
+D+0.750Lr	1.250	0.815	0.1407	PASS	0.0 ft	0.0	PASS	10.50 ft
+D+0.750S	1.150	0.834	0.7159	PASS	0.0 ft	0.0	PASS	10.50 ft
+D+0.60W	1.600	0.750	0.3970	PASS	5.285 ft	0.1272	PASS	0.0 ft
+D+0.750Lr+0.450W	1.600	0.750	0.3184	PASS	5.285 ft	0.09543	PASS	0.0 ft
+D+0.750S+0.450W	1.600	0.750	0.7653	PASS	5.215 ft	0.09543	PASS	0.0 ft
+0.60D+0.60W	1.600	0.750	0.3869	PASS	5.285 ft	0.1272	PASS	0.0 ft

RICHMOND HOFFMAYER INC.
STRUCTURAL ENGINEERING

Project Title: VILLAGE NEST
Engineer: JJH
Project Descr: MULTI UNIT PROJECT

Project ID: 2017-0610

2

Printed: 20 JUN 2017, 10:19AM

Wood Column

File = d:\ENERCALC Projects\2017-0610.ec6
ENERCALC, INC. 1983-2017, Build:6.17.3.17, Ver:6.17.3.17
Licensee : RICHMOND HOFFMAYER

Lic. # : KW-06002886

Description : ROOF SUPPORT POSTS - EXTERIOR WALLS

Load Combination Results

Load Combination	C_D	C_P	Maximum Axial + Bending Stress Ratios: Stress Ratio	Status	Location	Maximum Shear Ratios: Stress Ratio	Status	Location
+0.60D	1.600	0.750	0.04153	PASS	0.0 ft	0.0	PASS	10.50 ft

Maximum Reactions

Note: Only non-zero reactions are listed.

Load Combination	X-X Axis Reaction @ Base	@ Top	k	Y-Y Axis Reaction @ Base	@ Top	Axial Reaction @ Base	My - End Moments @ Base	@ Top	k-ft	Mx - End Moments @ Base	@ Top
D Only						1.548					
+D+Lr						3.048					
+D+S						16.548					
+D+0.750Lr						2.673					
+D+0.750S						12.798					
+D+0.60W				0.646	0.646	1.548					
+D+0.750Lr+0.450W				0.484	0.484	2.673					
+D+0.750S+0.450W				0.484	0.484	12.798					
+0.60D+0.60W				0.646	0.646	0.929					
+0.60D						0.929					
Lr Only						1.500					
S Only						15.000					
W Only				1.076	1.076						

Maximum Deflections for Load Combinations

Load Combination	Max. X-X Deflection	Distance	Max. Y-Y Deflection	Distance
D Only	0.0000 in	0.000 ft	0.000 in	0.000 ft
+D+Lr	0.0000 in	0.000 ft	0.000 in	0.000 ft
+D+S	0.0000 in	0.000 ft	0.000 in	0.000 ft
+D+0.750Lr	0.0000 in	0.000 ft	0.000 in	0.000 ft
+D+0.750S	0.0000 in	0.000 ft	0.000 in	0.000 ft
+D+0.60W	0.0000 in	0.000 ft	0.235 in	5.285 ft
+D+0.750Lr+0.450W	0.0000 in	0.000 ft	0.176 in	5.285 ft
+D+0.750S+0.450W	0.0000 in	0.000 ft	0.176 in	5.285 ft
+0.60D+0.60W	0.0000 in	0.000 ft	0.235 in	5.285 ft
+0.60D	0.0000 in	0.000 ft	0.000 in	0.000 ft
Lr Only	0.0000 in	0.000 ft	0.000 in	0.000 ft
S Only	0.0000 in	0.000 ft	0.000 in	0.000 ft
W Only	0.0000 in	0.000 ft	0.392 in	5.285 ft

Sketches

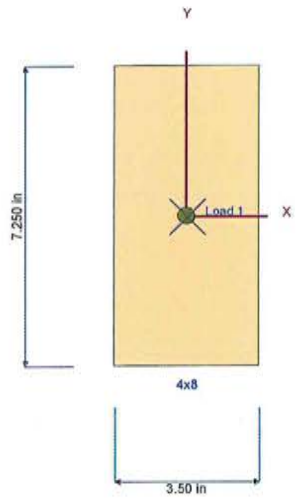

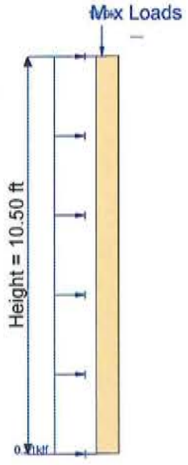

Loads are total entered value. Arrows do not reflect absolute direction.

RICHMOND HOFFMAYER INC.
STRUCTURAL ENGINEERING

Project Title: VILLAGE NEST
Engineer: JJH
Project Descr: MULTI UNIT PROJECT

Project ID: 2017-0610

Printed: 20 JUN 2017, 10:45AM

Wood Column

File = d:\ENERCALC Projects\2017-0610.ec6
ENERCALC, INC. 1983-2017, Build:6.17.3.17, Ver:6.17.3.17

Lic. # : KW-06002886 — Licensee : RICHMOND HOFFMAYER

Description : 2ND FLOOR BEARING STUDS @ 48" o.c. - SIP SPLINES

Code References

Calculations per NDS 2015, IBC 2015, CBC 2016, ASCE 7-10
Load Combinations Used : ASCE 7-10

General Information

Analysis Method : Allowable Stress Design
End Fixities : Top & Bottom Pinned
Overall Column Height : 10.50 ft
(Used for non-slender calculations)

Wood Species : Spruce - Pine - Fir
Wood Grade : No.1

Fb +	850.0 psi	Fv	125.0 psi
Fb -	850.0 psi	Ft	550.0 psi
Fc - Prll	700.0 psi	Density	26.210 pcf
Fc - Perp	425.0 psi		

E : Modulus of Elasticity . . .	x-x Bending	y-y Bending	Axial
Basic	1,300.0	1,300.0	1,300.0 ksi
Minimum	470.0	470.0	

Wood Section Name : 2-2x8
Wood Grading/Manuf. : Graded Lumber
Wood Member Type : Sawn

Exact Width	3.0 in	
Exact Depth	7.250 in	
Area	21.750 in^2	
Ix	95.270 in^4	
Iy	16.313 in^4	

Allow Stress Modification Factors

Cf or Cv for Bending	1.20
Cf or Cv for Compression	1.050
Cf or Cv for Tension	1.20
Cm : Wet Use Factor	1.0
Ct : Temperature Factor	1.0
Cfu : Flat Use Factor	1.0
Kf : Built-up columns	1.0 NDS 15.3.2
Use Cr : Repetitive ?	No

Brace condition for deflection (buckling) along columns :
X-X (width) axis : Fully braced against buckling along X-X Axis
Y-Y (depth) axis : Unbraced Length for X-X Axis buckling = 10.50 ft, K = 1.0

Applied Loads

Service loads entered. Load Factors will be applied for calculations.

Column self weight included : 41.567 lbs * Dead Load Factor
AXIAL LOADS . . .
BEARING: Axial Load at 10.50 ft, D = 0.5040, Lr = 0.6390, S = 8.430 k
BENDING LOADS . . .
51.3 PSF WIND: Lat. Uniform Load creating Mx-x, W = 0.1020 k/ft

DESIGN SUMMARY

Bending & Shear Check Results

PASS Max. Axial+Bending Stress Ratio = 0.6013 : 1

Load Combination	+D+S
Governing NDS Forumla	Comp Only, fc/Fc'
Location of max.above base	0.0 ft
At maximum location values are . . .	
Applied Axial	8.976 k
Applied Mx	0.0 k-ft
Applied My	0.0 k-ft
Fc : Allowable	686.32 psi

PASS Maximum Shear Stress Ratio = 0.07386 : 1

Load Combination	+D+0.60W
Location of max.above base	0.0 ft
Applied Design Shear	22.159 psi
Allowable Shear	200.0 psi

Maximum SERVICE Lateral Load Reactions . .

Top along Y-Y	0.5355 k	Bottom along Y-Y	0.5355 k
Top along X-X	0.0 k	Bottom along X-X	0.0 k

Maximum SERVICE Load Lateral Deflections . . .

Along Y-Y 0.2277 in at 5.285 ft above base
for load combination : W Only

Along X-X 0.0 in at 0.0 ft above base
for load combination : n/a

Other Factors used to calculate allowable stresses . . .

	Bending	Compression	Tension

Load Combination Results

Load Combination	C_D	C_P	Max Axial + Bending Stress Ratio	Status	Location	Max Shear Ratio	Status	Location
D Only	0.900	0.862	0.04401	PASS	0.0 ft	0.0	PASS	10.50 ft
+D+Lr	1.250	0.791	0.07490	PASS	0.0 ft	0.0	PASS	10.50 ft
+D+S	1.150	0.812	0.6013	PASS	0.0 ft	0.0	PASS	10.50 ft
+D+0.750Lr	1.250	0.791	0.06480	PASS	0.0 ft	0.0	PASS	10.50 ft
+D+0.750S	1.150	0.812	0.4601	PASS	0.0 ft	0.0	PASS	10.50 ft
+D+0.60W	1.600	0.719	0.2416	PASS	5.285 ft	0.07386	PASS	0.0 ft
+D+0.750Lr+0.450W	1.600	0.719	0.1868	PASS	5.215 ft	0.05540	PASS	0.0 ft
+D+0.750S+0.450W	1.600	0.719	0.3744	PASS	5.215 ft	0.05540	PASS	0.0 ft
+0.60D+0.60W	1.600	0.719	0.2391	PASS	5.285 ft	0.07386	PASS	0.0 ft

RICHMOND HOFFMAYER INC.
STRUCTURAL ENGINEERING

Project Title: VILLAGE NEST
Engineer: JJH
Project Descr: MULTI UNIT PROJECT

Project ID: 2017-0610

28

Printed: 20 JUN 2017, 10:45AM

Wood Column

File = d:\ENERCALC Projects\2017-0610.ec6
ENERCALC, INC. 1983-2017, Build:6.17.3.17, Ver:6.17.3.17

Lic. # : KW-06002886 — Licensee : RICHMOND HOFFMAYER

Description : 2ND FLOOR BEARING STUDS @ 48" o.c. - SIP SPLINES

Load Combination Results

Load Combination	C_D	C_P	Maximum Axial + Bending Stress Ratios: Stress Ratio	Status	Location	Maximum Shear Ratios: Stress Ratio	Status	Location
+0.60D	1.600	0.719	0.01779	PASS	0.0 ft	0.0	PASS	10.50 ft

Maximum Reactions

Note: Only non-zero reactions are listed.

Load Combination	X-X Axis Reaction @ Base	@ Top	k	Y-Y Axis Reaction @ Base	@ Top	Axial Reaction @ Base	My - End Moments @ Base	@ Top	k-ft	Mx - End Moments @ Base	@ Top
D Only						0.546					
+D+Lr						1.185					
+D+S						8.976					
+D+0.750Lr						1.025					
+D+0.750S						6.868					
+D+0.60W				0.321	0.321	0.546					
+D+0.750Lr+0.450W				0.241	0.241	1.025					
+D+0.750S+0.450W				0.241	0.241	6.868					
+0.60D+0.60W				0.321	0.321	0.327					
+0.60D						0.327					
Lr Only						0.639					
S Only						8.430					
W Only				0.536	0.535						

Maximum Deflections for Load Combinations

Load Combination	Max. X-X Deflection	Distance	Max. Y-Y Deflection	Distance
D Only	0.0000 in	0.000 ft	0.000 in	0.000 ft
+D+Lr	0.0000 in	0.000 ft	0.000 in	0.000 ft
+D+S	0.0000 in	0.000 ft	0.000 in	0.000 ft
+D+0.750Lr	0.0000 in	0.000 ft	0.000 in	0.000 ft
+D+0.750S	0.0000 in	0.000 ft	0.000 in	0.000 ft
+D+0.60W	0.0000 in	0.000 ft	0.137 in	5.285 ft
+D+0.750Lr+0.450W	0.0000 in	0.000 ft	0.102 in	5.285 ft
+D+0.750S+0.450W	0.0000 in	0.000 ft	0.102 in	5.285 ft
+0.60D+0.60W	0.0000 in	0.000 ft	0.137 in	5.285 ft
+0.60D	0.0000 in	0.000 ft	0.000 in	0.000 ft
Lr Only	0.0000 in	0.000 ft	0.000 in	0.000 ft
S Only	0.0000 in	0.000 ft	0.000 in	0.000 ft
W Only	0.0000 in	0.000 ft	0.228 in	5.285 ft

Sketches

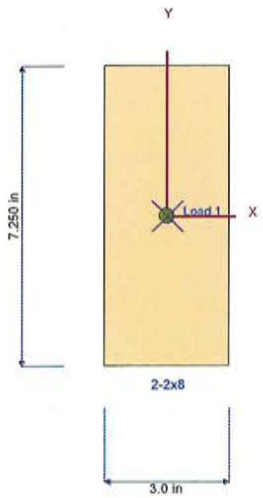

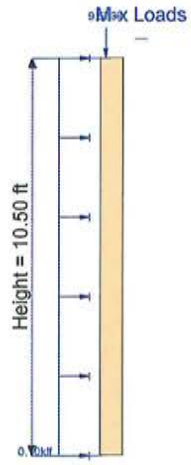

Loads are total entered value. Arrows do not reflect absolute direction.

RICHMOND HOFFMAYER INC.
STRUCTURAL ENGINEERING

Project Title: VILLAGE NEST
Engineer: JJH
Project Descr: MULTI UNIT PROJECT

Project ID: 2017-0610

24

Printed: 20 JUN 2017, 9:24AM

Steel Column

File = d:\ENERCALC Projects\2017-0610.ec6
ENERCALC, INC. 1983-2017, Build:6.17.3.17, Ver:6.17.3.17

Lic. # : KW-06002886 — Licensee : RICHMOND HOFFMAYER

Description : RIDGE SUPPORT

Code References

Calculations per AISC 360-10, IBC 2015, CBC 2016, ASCE 7-10
Load Combinations Used : ASCE 7-10

General Information

Steel Section Name :	Pipe4 Std
Analysis Method :	Allowable Strength
Steel Stress Grade	A-36, Carbon Steel, Fy = 36 ksi
Fy : Steel Yield	36.0 ksi
E : Elastic Bending Modulus	29,000.0 ksi

Overall Column Height 10.0 ft
Top & Bottom Fixity Top & Bottom Pinned
Brace condition for deflection (buckling) along columns :
X-X (width) axis :
Fully braced against buckling along X-X Axis
Y-Y (depth) axis :
Fully braced against buckling along Y-Y Axis

Applied Loads

Service loads entered. Load Factors will be applied for calculations.

Column self weight included : 108.581 lbs * Dead Load Factor
AXIAL LOADS . . .
MAX ROOF: Axial Load at 10.0 ft, D = 3.110, LR = 3.390, S = 42.460 k

DESIGN SUMMARY

Bending & Shear Check Results

PASS Max. Axial+Bending Stress Ratio = 0.7135 : 1
Load Combination +D+S
Location of max.above base 0.0 ft
At maximum location values are . . .
Pa : Axial 45.679 k
Pn / Omega : Allowable 64.024 k
Ma-x : Applied 0.0 k-ft
Mn-x / Omega : Allowable 7.275 k-ft
Ma-y : Applied 0.0 k-ft
Mn-y / Omega : Allowable 7.275 k-ft

PASS Maximum Shear Stress Ratio = 0.0 : 1
Load Combination
Location of max.above base 0.0 ft
At maximum location values are . . .
Va : Applied 0.0 k
Vn / Omega : Allowable 0.0 k

Maximum SERVICE Load Reactions . .

Top along X-X	0.0 k
Bottom along X-X	0.0 k
Top along Y-Y	0.0 k
Bottom along Y-Y	0.0 k

Maximum SERVICE Load Deflections . . .

Along Y-Y 0.0 in at 0.0ft above base
for load combination :

Along X-X 0.0 in at 0.0ft above base
for load combination :

Load Combination Results

Load Combination	Maximum Axial + Bending Stress Ratios: Stress Ratio	Status	Location	Maximum Shear Ratios: Stress Ratio	Status	Location
D Only	0.050	PASS	0.00 ft	0.000	PASS	0.00 ft
+D+Lr	0.103	PASS	0.00 ft	0.000	PASS	0.00 ft
+D+S	0.713	PASS	0.00 ft	0.000	PASS	0.00 ft
+D+0.750Lr	0.090	PASS	0.00 ft	0.000	PASS	0.00 ft
+D+0.750S	0.548	PASS	0.00 ft	0.000	PASS	0.00 ft
+0.60D	0.030	PASS	0.00 ft	0.000	PASS	0.00 ft

Maximum Reactions

Note: Only non-zero reactions are listed.

Load Combination	Axial Reaction @ Base	X-X Axis Reaction k @ Base	@ Top	Y-Y Axis Reaction @ Base	@ Top	Mx - End Moments k-ft @ Base	@ Top	My - End Moments @ Base	@ Top
D Only	3.219								
+D+Lr	6.609								
+D+S	45.679								
+D+0.750Lr	5.761								
+D+0.750S	35.064								
+0.60D	1.931								
Lr Only	3.390								
S Only	42.460								

RICHMOND HOFFMAYER INC.
STRUCTURAL ENGINEERING

Project Title: VILLAGE NEST
Engineer: JJH
Project Descr: MULTI UNIT PROJECT

Project ID: 2017-0610

25

Printed: 20 JUN 2017, 9:24AM

Steel Column

File = d:\ENERCALC Projects\2017-0610.ec6
ENERCALC, INC. 1983-2017, Build:6.17.3.17, Ver:6.17.3.17

Lic. # : KW-06002886 — Licensee : RICHMOND HOFFMAYER

Description : RIDGE SUPPORT

Extreme Reactions

Item	Extreme Value	Axial Reaction @ Base	X-X Axis Reaction @ Base	@ Top	k	Y-Y Axis Reaction @ Base	@ Top	Mx - End Moments @ Base	@ Top	k-ft	My - End Moments @ Base	@ Top
Axial @ Base	Maximum	45.679										
"	Minimum	1.931										
Reaction, X-X Axis	Maximum	3.219										
"	Minimum	3.219										
Reaction, Y-Y Axis	Maximum	3.219										
"	Minimum	3.219										
Reaction, X-X Axis	Maximum	3.219										
"	Minimum	3.219										
Reaction, Y-Y Axis	Maximum	3.219										
"	Minimum	3.219										
Moment, X-X Axis Ba	Maximum	3.219										
"	Minimum	3.219										
Moment, Y-Y Axis Ba	Maximum	3.219										
"	Minimum	3.219										
Moment, X-X Axis To	Maximum	3.219										
"	Minimum	3.219										
Moment, Y-Y Axis To	Maximum	3.219										
"	Minimum	3.219										

Maximum Deflections for Load Combinations

Load Combination	Max. X-X Deflection		Distance		Max. Y-Y Deflection		Distance	
D Only	0.0000	in	0.000	ft	0.000	in	0.000	ft
+D+Lr	0.0000	in	0.000	ft	0.000	in	0.000	ft
+D+S	0.0000	in	0.000	ft	0.000	in	0.000	ft
+D+0.750Lr	0.0000	in	0.000	ft	0.000	in	0.000	ft
+D+0.750S	0.0000	in	0.000	ft	0.000	in	0.000	ft
+0.60D	0.0000	in	0.000	ft	0.000	in	0.000	ft
Lr Only	0.0000	in	0.000	ft	0.000	in	0.000	ft
S Only	0.0000	in	0.000	ft	0.000	in	0.000	ft

Steel Section Properties : Pipe4 Std

Depth	=	4.500 in	I xx	=	6.82 in^4	J	=	13.600 in^4
			S xx	=	3.03 in^3			
Diameter	=	4.500 in	R xx	=	1.510 in			
Wall Thick	=	0.237 in	Zx	=	4.050 in^3			
Area	=	2.970 in^2	I yy	=	6.820 in^4			
Weight	=	10.858 plf	S yy	=	3.030 in^3			
			R yy	=	1.510 in			
Ycg	=	0.000 in						

RICHMOND HOFFMAYER INC.
STRUCTURAL ENGINEERING

Project Title: VILLAGE NEST
Engineer: JJH
Project Descr: MULTI UNIT PROJECT

Project ID: 2017-0610

26

Printed: 20 JUN 2017, 9:24AM

Steel Column

File = d:\ENERCALC Projects\2017-0610.ec6
ENERCALC, INC. 1983-2017, Build:6.17.3.17, Ver:6.17.3.17

Lic. # : KW-06002886 Licensee : RICHMOND HOFFMAYER

Description : RIDGE SUPPORT

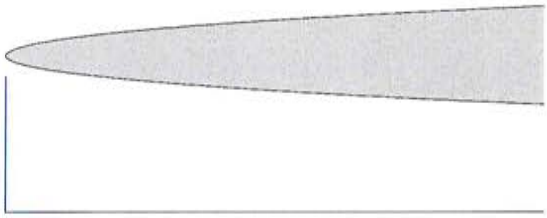

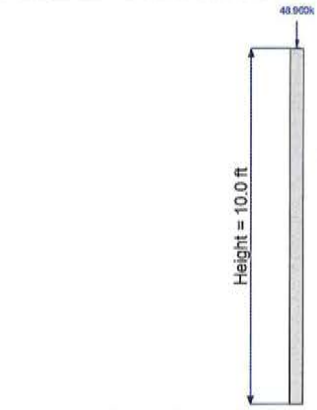

Loads are total entered value. Arrows do not reflect absolute direction.

RICHMOND HOFFMAYER INC.
STRUCTURAL ENGINEERING

Project Title: VILLAGE NEST
Engineer: JJH
Project Descr: MULTI UNIT PROJECT

Project ID: 2017-0610

17

Printed: 20 JUN 2017, 9:32AM

Steel Column

File = d:\ENERCALC Projects\2017-0610.ec6
ENERCALC, INC. 1983-2017, Build:6.17.3.17, Ver:6.17.3.17

Lic. # : KW-06002886 — Licensee : RICHMOND HOFFMAYER

Description : B5 SUPPORT

Code References

Calculations per AISC 360-10, IBC 2015, CBC 2016, ASCE 7-10
Load Combinations Used : ASCE 7-10

General Information

Steel Section Name : **HSS12x6x5/8**
Analysis Method : Allowable Strength
Steel Stress Grade
Fy : Steel Yield 46.0 ksi
E : Elastic Bending Modulus 29,000.0 ksi

Overall Column Height 10.0 ft
Top & Bottom Fixity Top & Bottom Pinned
Brace condition for deflection (buckling) along columns :
X-X (width) axis :
Unbraced Length for X-X Axis buckling = 10.0 ft, K = 1.0
Y-Y (depth) axis :
Unbraced Length for Y-Y Axis buckling = 10.0 ft, K = 2.1

Applied Loads

Service loads entered. Load Factors will be applied for calculations.

Column self weight included : 676.18 lbs * Dead Load Factor
AXIAL LOADS . . .
B5: Axial Load at 10.0 ft, D = 3.350, LR = 1.840, S = 49.110 k

< 0.15 ✓ USE FOR LATERAL AS OPTION

DESIGN SUMMARY

Bending & Shear Check Results

PASS Max. Axial+Bending Stress Ratio = 0.1324 : 1
Load Combination +D+S
Location of max.above base 0.0 ft
At maximum location values are . . .
Pa : Axial 53.136 k
Pn / Omega : Allowable 401.460 k
Ma-x : Applied 0.0 k-ft
Mn-x / Omega : Allowable 157.924 k-ft
Ma-y : Applied 0.0 k-ft
Mn-y / Omega : Allowable 96.637 k-ft

PASS Maximum Shear Stress Ratio = 0.0 : 1
Load Combination
Location of max.above base 0.0 ft
At maximum location values are . . .
Va : Applied 0.0 k
Vn / Omega : Allowable 0.0 k

Maximum SERVICE Load Reactions . .
Top along X-X 0.0 k
Bottom along X-X 0.0 k
Top along Y-Y 0.0 k
Bottom along Y-Y 0.0 k

Maximum SERVICE Load Deflections . . .
Along Y-Y 0.0 in at 0.0ft above base
for load combination :
Along X-X 0.0 in at 0.0ft above base
for load combination :

Load Combination Results

Load Combination	Maximum Axial + Bending Stress Ratios: Stress Ratio	Status	Location	Maximum Shear Ratios: Stress Ratio	Status	Location
D Only	0.010	PASS	0.00 ft	0.000	PASS	0.00 ft
+D+Lr	0.015	PASS	0.00 ft	0.000	PASS	0.00 ft
+D+S	0.132	PASS	0.00 ft	0.000	PASS	0.00 ft
+D+0.750Lr	0.013	PASS	0.00 ft	0.000	PASS	0.00 ft
+D+0.750S	0.102	PASS	0.00 ft	0.000	PASS	0.00 ft
+0.60D	0.006	PASS	0.00 ft	0.000	PASS	0.00 ft

Maximum Reactions

Note: Only non-zero reactions are listed.

Load Combination	Axial Reaction @ Base	X-X Axis Reaction k @ Base	@ Top	Y-Y Axis Reaction @ Base	@ Top	Mx - End Moments k-ft @ Base	@ Top	My - End Moments @ Base	@ Top
D Only	4.026								
+D+Lr	5.866								
+D+S	53.136								
+D+0.750Lr	5.406								
+D+0.750S	40.859								
+0.60D	2.416								
Lr Only	1.840								
S Only	49.110								

RICHMOND HOFFMAYER INC.
STRUCTURAL ENGINEERING

Project Title: VILLAGE NEST
Engineer: JJH
Project Descr: MULTI UNIT PROJECT

Project ID: 2017-0610

28

Printed: 20 JUN 2017, 9:32AM

Steel Column

File = d:\ENERCALC Projects\2017-0610.ec6
ENERCALC, INC. 1983-2017, Build:6.17.3.17, Ver:6.17.3.17

Lic. # : KW-06002886
Licensee : RICHMOND HOFFMAYER

Description : B5 SUPPORT

Extreme Reactions

Item	Extreme Value	Axial Reaction @ Base	X-X Axis Reaction @ Base	@ Top	k	Y-Y Axis Reaction @ Base	@ Top	Mx - End Moments @ Base	@ Top	k-ft	My - End Moments @ Base	@ Top
Axial @ Base	Maximum	53.136										
"	Minimum	1.840										
Reaction, X-X Axis	Maximum	4.026										
"	Minimum	4.026										
Reaction, Y-Y Axis	Maximum	4.026										
"	Minimum	4.026										
Reaction, X-X Axis	Maximum	4.026										
"	Minimum	4.026										
Reaction, Y-Y Axis	Maximum	4.026										
"	Minimum	4.026										
Moment, X-X Axis Ba	Maximum	4.026										
"	Minimum	4.026										
Moment, Y-Y Axis Ba	Maximum	4.026										
"	Minimum	4.026										
Moment, X-X Axis To	Maximum	4.026										
"	Minimum	4.026										
Moment, Y-Y Axis To	Maximum	4.026										
"	Minimum	4.026										

Maximum Deflections for Load Combinations

Load Combination	Max. X-X Deflection		Distance		Max. Y-Y Deflection		Distance	
D Only	0.0000	in	0.000	ft	0.000	in	0.000	ft
+D+Lr	0.0000	in	0.000	ft	0.000	in	0.000	ft
+D+S	0.0000	in	0.000	ft	0.000	in	0.000	ft
+D+0.750Lr	0.0000	in	0.000	ft	0.000	in	0.000	ft
+D+0.750S	0.0000	in	0.000	ft	0.000	in	0.000	ft
+0.60D	0.0000	in	0.000	ft	0.000	in	0.000	ft
Lr Only	0.0000	in	0.000	ft	0.000	in	0.000	ft
S Only	0.0000	in	0.000	ft	0.000	in	0.000	ft

Steel Section Properties : HSS12x6x5/8

Depth	=	12.000 in	I xx	=	321.00 in^4	J	=	271.000 in^4
Design Thick	=	0.581 in	S xx	=	53.40 in^3	Cw	=	71.10 in^6
Width	=	6.000 in	R xx	=	4.140 in			
Wall Thick	=	0.624 in	Zx	=	68.800 in^3			
Area	=	18.700 in^2	I yy	=	107.000 in^4	C	=	71.100 in^3
Weight	=	67.618 plf	S yy	=	35.500 in^3			
			R yy	=	2.390 in			
			Zy	=	42.100 in^3			

Ycg = 0.000 in

RICHMOND HOFFMAYER INC.
STRUCTURAL ENGINEERING

Project Title: VILLAGE NEST
Engineer: JJH
Project Descr: MULTI UNIT PROJECT

Project ID: 2017-0610

29

Printed: 20 JUN 2017, 9:32AM

Steel Column

File = d:\ENERCALC Projects\2017-0610.ec6
ENERCALC, INC. 1983-2017, Build:6.17.3.17, Ver:6.17.3.17

Lic. # : KW-06002886
Licensee : RICHMOND HOFFMAYER

Description : B5 SUPPORT

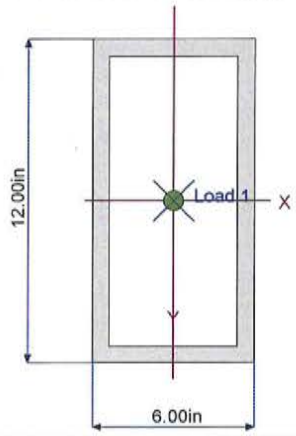

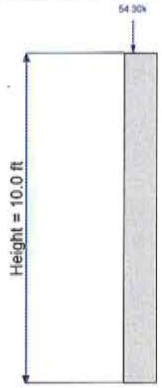

Loads are total entered value. Arrows do not reflect absolute direction.

RICHMOND HOFFMAYER INC.
STRUCTURAL ENGINEERING

PROJECT	FELDSPAR LOWER	JOB	2017-0610
CLIENT	VILLAGE NEST		
ADDRESS	EDEN, UTAH		
DESIGN	HUUM		
ENGINEER	J.H.	DATE	6/16/2017
	RICHMOND PE 49628 HOFFMAYER SE 3935	SHEET	30 OF

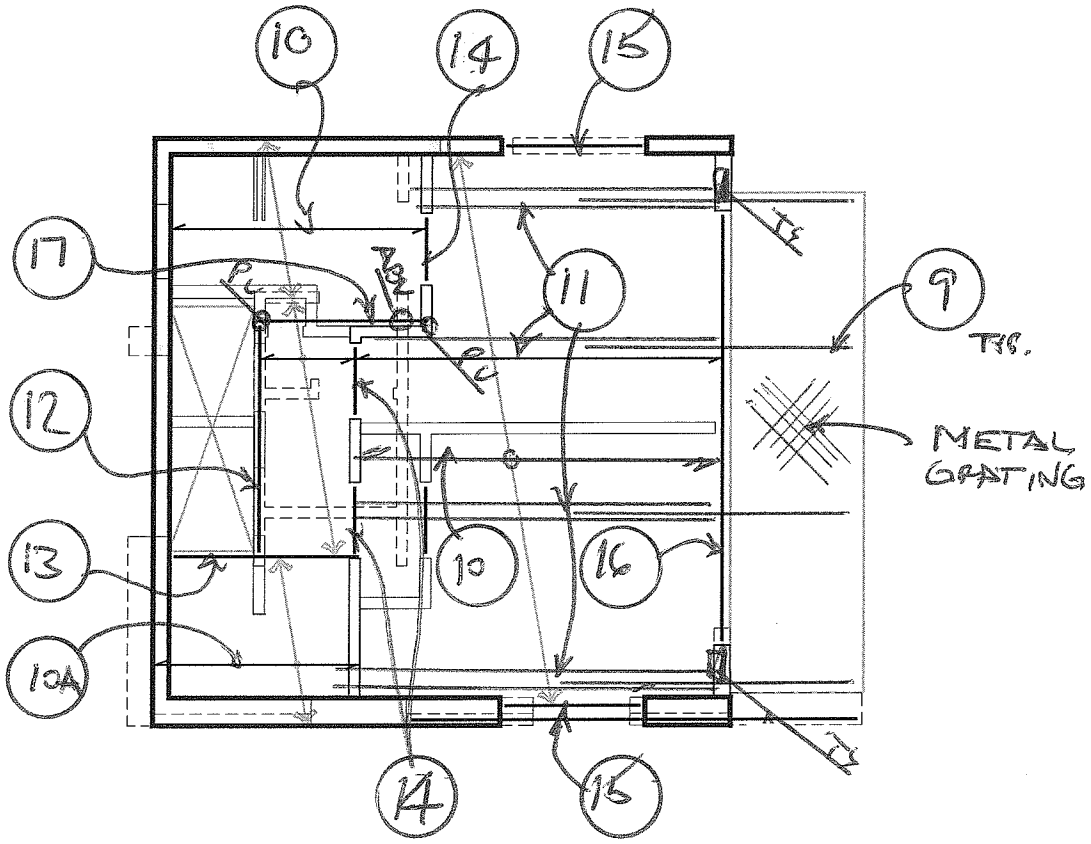

2ND FLOOR FRAMING PLAN
FELDSPAR - LOWER
N.T.S.

○: BEAM #

4425 CANOGA AVENUE WOODLAND HILLS CA 91364
PHONE (818) 347-7008 FAX (818) 883-8869
Info@RichmondHoffmayer.com

RICHMOND HOFFMAYER INC.
STRUCTURAL ENGINEERING

PROJECT	VILLAGE NEST	JOB	2017-0610
CLIENT	-		
ADDRESS	EDEN, UT		
DESIGN	HUUM		
ENGINEER	J.H.	DATE	6/14/2017
	RICHMOND PE 44628 HOFFMAYER SE 3935	SHEET	31 OF

METAL GRATING:

D = 12 PSF
L = 60 PSF
S = 264 PSF — (OPENED GRATING - DON'T DBL SNOW)

LOAD COMBINATIONS:

D + L = 72 PSF
D + S = 276 PSF ← GOVERNS
D + 0.75L + 0.75S = 255 PSF

SPAN	$M = wl^2/8$ (1 - SPAN OR 2 - SPANS)
32"	2944 IN-LB
48"	6624 IN-LB
64"	11776 IN-LB

MAT. ALUMINUM STEEL

E = 10000 ksi 29000 ksi
F = 12000 psi 18000 psi MIN

SPAN IN INCHES

$FSK > M$ & $EIK > 5wl^3/460 \times 240$

↑ BARS/FT ↑ 276 PSF

$K = 12/(7/16) = 27.4$

$12000(S)27.4 > 2944 \rightarrow S = 0.009\ IN^3$
$12000(S)27.4 > 6624 \rightarrow S = 0.020\ IN^3$
$12000(S)27.4 > 11776 \rightarrow S = 0.035\ IN^3$
} AL

4425 CANOGA AVENUE WOODLAND HILLS CA 91364
PHONE (818) 347-7008 FAX (818) 883-8869
info@RichmondHoffmayer.com

RICHMOND HOFFMAYER INC.
STRUCTURAL ENGINEERING

PROJECT	VILLAGE NEST	JOB	2017-0610
CLIENT	-		
ADDRESS	EDEN, UT		
DESIGN	HUUM		
ENGINEER	J.H.	DATE	6/14/2017
	RICHMOND PE 44628 HOFFMAYER SE 3455	SHEET	32 OF

$12/_{16}(0.009) = 0.006\ IN^3$
$12/_{16}(0.026) = 0.0133\ IN^3$
$12/_{16}(0.035) = 0.0233\ IN^3$ } STEEL.

$I K > 5(276)\ell^3/460E$

$I > 0.0109\ell^3/E$

$0.0109(32^3)/10E6 = 0.00004\ IN^4$
$0.0109(48^3)/10E6 = 0.0001\ IN^4$
$0.0109(64^3)/10E6 = 0.0003\ IN^4$ } AL

$10/_{29}(0.00004) = 0.000013\ IN^4$
$10/_{29}(0.0001) = 0.000035\ IN^4$
$10/_{29}(0.0003) = 0.0001\ IN^4$ } STEEL

1" DEEP x 3/16" AL → $S = 0.0313\ IN^3$, $I = 0.0156\ IN^4$
* USE UP TO 48" SPANS W/ BARS @ 7/16"

1" DEEP x 3/16" STEEL → $S = 0.0313\ IN^3$, $I = 0.0156\ IN^4$
* USE UP TO 64" SPANS W/ BARS @ 7/16"

1" x 3/16" AL @ 7/16" = GRATING W/ SPANS @ 48"

4425 CANOGA AVENUE WOODLAND HILLS CA 91364
PHONE (818) 347-7008 FAX (818) 883-8869
Info@RichmondHoffmayer.com

Steel Beam

File = d:\ENERCALC Projects\2017-0610.ec6
ENERCALC, INC. 1983-2017, Build:6.17.3.17, Ver:6.17.3.17
Lic. # : KW-06002886
Licensee : RICHMOND HOFFMAYER

Description : B9 - DECK SUPPORT

CODE REFERENCES

Calculations per AISC 360-10, IBC 2015, ASCE 7-10
Load Combination Set : ASCE 7-10

Material Properties

Analysis Method : Allowable Strength Design
Beam Bracing : Beam is Fully Braced against lateral-torsional buckling
Bending Axis : Major Axis Bending

Fy : Steel Yield : 50.0 ksi
E: Modulus : 29,000.0 ksi

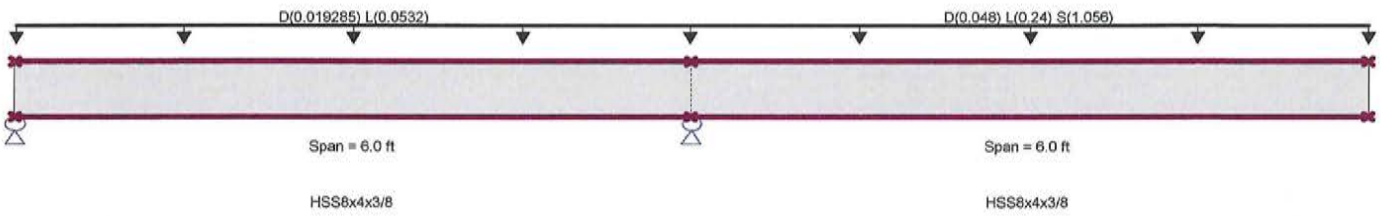

Applied Loads

Service loads entered. Load Factors will be applied for calculations.

Beam self weight calculated and added to loading
Load for Span Number 1
Uniform Load : D = 0.01450, L = 0.040 ksf, Tributary Width = 1.330 ft, (FLOOR)
Load for Span Number 2
Uniform Load : D = 0.0120, L = 0.060, S = 0.2640 ksf, Tributary Width = 4.0 ft, (DECK)

DESIGN SUMMARY

Design OK

Maximum Bending Stress Ratio =	0.434 : 1	Maximum Shear Stress Ratio =	0.078 : 1
Section used for this span	HSS8x4x3/8	Section used for this span	HSS8x4x3/8
Ma : Applied	20.367 k-ft	Va : Applied	6.789 k
Mn / Omega : Allowable	46.906 k-ft	Vn/Omega : Allowable	87.183 k
Load Combination	+D+S	Load Combination	+D+S
Location of maximum on span	6.000ft	Location of maximum on span	6.000 ft
Span # where maximum occurs	Span # 1	Span # where maximum occurs	Span # 1

Maximum Deflection

Max Downward Transient Deflection	0.089 in	Ratio =	1,616>=360.
Max Upward Transient Deflection	-0.009 in	Ratio =	7,748 >=360.
Max Downward Total Deflection	0.397 in	Ratio =	363 >=240.
Max Upward Total Deflection	-0.043 in	Ratio =	1675 >=240.

Maximum Forces & Stresses for Load Combinations

Load Combination / Segment Length	Span #	Max Stress Ratios M	Max Stress Ratios V	Summary of Moment Values Mmax +	Mmax -	Ma Max	Mnx	Mnx/Omega	Cb	Rm	Summary of Shear Values Va Max	Vnx	Vnx/Omega
D Only													
Dsgn. L = 6.00 ft	1	0.029	0.005		-1.36	1.36	78.33	46.91	1.00	1.00	0.45	145.60	87.18
Dsgn. L = 6.00 ft	2	0.029	0.005		-1.36	1.36	78.33	46.91	1.00	1.00	0.45	145.60	87.18
+D+L													
Dsgn. L = 6.00 ft	1	0.121	0.022		-5.68	5.68	78.33	46.91	1.00	1.00	1.89	145.60	87.18
Dsgn. L = 6.00 ft	2	0.121	0.022		-5.68	5.68	78.33	46.91	1.00	1.00	1.89	145.60	87.18
+D+S													
Dsgn. L = 6.00 ft	1	0.434	0.078		-20.37	20.37	78.33	46.91	1.00	1.00	6.79	145.60	87.18
Dsgn. L = 6.00 ft	2	0.434	0.078		-20.37	20.37	78.33	46.91	1.00	1.00	6.79	145.60	87.18
+D+0.750L													
Dsgn. L = 6.00 ft	1	0.098	0.018		-4.60	4.60	78.33	46.91	1.00	1.00	1.53	145.60	87.18
Dsgn. L = 6.00 ft	2	0.098	0.018		-4.60	4.60	78.33	46.91	1.00	1.00	1.53	145.60	87.18
+D+0.750L+0.750S													
Dsgn. L = 6.00 ft	1	0.402	0.072		-18.85	18.85	78.33	46.91	1.00	1.00	6.28	145.60	87.18
Dsgn. L = 6.00 ft	2	0.402	0.072		-18.85	18.85	78.33	46.91	1.00	1.00	6.28	145.60	87.18
+0.60D													
Dsgn. L = 6.00 ft	1	0.017	0.003		-0.82	0.82	78.33	46.91	1.00	1.00	0.27	145.60	87.18
Dsgn. L = 6.00 ft	2	0.017	0.003		-0.82	0.82	78.33	46.91	1.00	1.00	0.27	145.60	87.18

Overall Maximum Deflections

Load Combination	Span	Max. "-" Defl	Location in Span	Load Combination	Max. "+" Defl	Location in Span
	1	0.0000	0.000	+D+0.750L+0.750S	-0.0430	3.504

Steel Beam

Description : B9 - DECK SUPPORT

Overall Maximum Deflections

Load Combination	Span	Max. "-" Defl	Location in Span	Load Combination	Max. "+" Defl	Location in Span
+D+0.750L+0.750S	2	0.3967	6.000		0.0000	3.504

Vertical Reactions

Support notation : Far left is #1 Values in KIPS

Load Combination	Support 1	Support 2	Support 3
Overall MAXimum	-3.254	10.324	
Overall MINimum	-0.052	0.492	
D Only	-0.086	0.820	
+D+L	-0.647	3.139	
+D+S	-3.254	10.324	
+D+0.750L	-0.506	2.559	
+D+0.750L+0.750S	-2.882	9.687	
+0.60D	-0.052	0.492	
L Only	-0.560	2.320	
S Only	-3.168	9.504	

RICHMOND HOFFMAYER INC.
STRUCTURAL ENGINEERING

Project Title: VILLAGE NEST
Engineer: JJH
Project Descr: MULTI UNIT PROJECT

Project ID: 2017-0610
35

Printed: 20 JUN 2017, 1:50PM

Wood Beam

File = d:\ENERCALC Projects\2017-0610.ec6
ENERCALC, INC. 1983-2017, Build:6.17.3.17, Ver:6.17.3.17

Lic. # : KW-06002886 — Licensee : RICHMOND HOFFMAYER

Description : B10 - FLOOR JOISTS w/ PARTITION

CODE REFERENCES

Calculations per NDS 2015, IBC 2015, CBC 2016, ASCE 7-10
Load Combination Set : ASCE 7-10

Material Properties

Analysis Method : Allowable Stress Design
Load Combination ASCE 7-10

Wood Species : Spruce - Pine - Fir
Wood Grade : No. 1/No. 2

Beam Bracing : Beam is Fully Braced against lateral-torsional buckling

Fb - Tension	875.0 psi
Fb - Compr	875.0 psi
Fc - Prll	1,150.0 psi
Fc - Perp	425.0 psi
Fv	135.0 psi
Ft	450.0 psi

E : Modulus of Elasticity

Ebend- xx	1,400.0 ksi
Eminbend - xx	510.0 ksi
Density	26.210 pcf

Repetitive Member Stress Increase

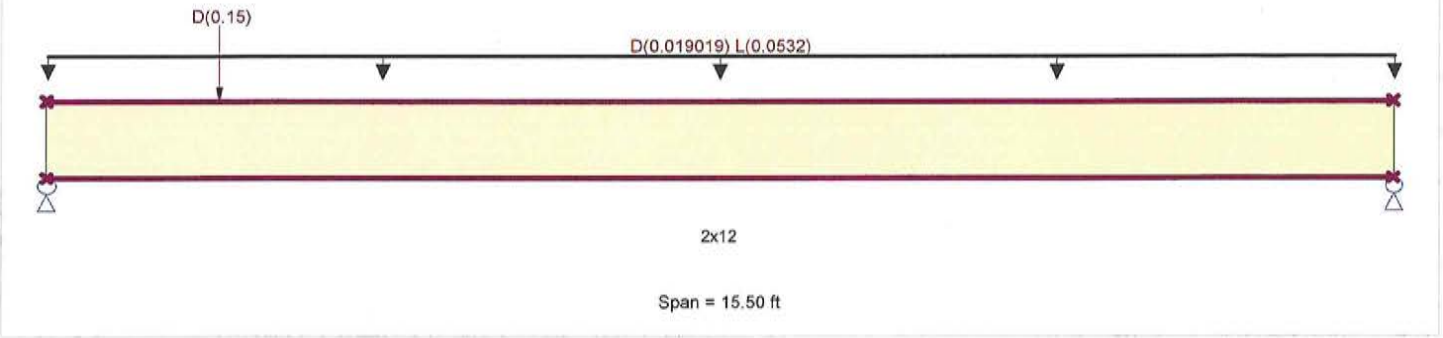

Applied Loads

Service loads entered. Load Factors will be applied for calculations.

Uniform Load : D = 0.01430, L = 0.040 ksf, Tributary Width = 1.330 ft, (FLOOR)
Point Load : D = 0.150 k @ 2.0 ft, (WALL)

DESIGN SUMMARY

Design OK

Maximum Bending Stress Ratio	=	0.875 : 1	Maximum Shear Stress Ratio	=	0.412 : 1
Section used for this span		2x12	Section used for this span		2x12
fb : Actual	=	880.42 psi	fv : Actual	=	55.55 psi
FB : Allowable	=	1,006.25 psi	Fv : Allowable	=	135.00 psi
Load Combination		+D+L	Load Combination		+D+L
Location of maximum on span	=	7.467 ft	Location of maximum on span	=	0.000 ft
Span # where maximum occurs	=	Span # 1	Span # where maximum occurs	=	Span # 1

Maximum Deflection

Max Downward Transient Deflection	0.279 in	Ratio =	666 >=360.
Max Upward Transient Deflection	0.000 in	Ratio =	0 <360.0
Max Downward Total Deflection	0.409 in	Ratio =	454 >=240.
Max Upward Total Deflection	0.000 in	Ratio =	0 <240.0

Vertical Reactions

Support notation : Far left is #1 — Values in KIPS

Load Combination	Support 1	Support 2
Overall MAXimum	0.690	0.579
Overall MINimum	0.167	0.100
D Only	0.278	0.167
+D+L	0.690	0.579
+D+0.750L	0.587	0.476
+0.60D	0.167	0.100
L Only	0.412	0.412

RICHMOND HOFFMAYER INC.
STRUCTURAL ENGINEERING

Project Title: VILLAGE NEST
Engineer: JJH
Project Descr: MULTI UNIT PROJECT

Project ID: 2017-0610
35A

Printed: 7 JUL 2017, 10:46AM

Wood Beam

File = d:\ENERCALC Projects\2017-0610.ec6
ENERCALC, INC. 1983-2017, Build:10.17.6.29, Ver:10.17.6.29
Lic. # : KW-06002886 — Licensee : RICHMOND HOFFMAYER

Description : B10A - FLOOR JOISTS ABV. LANDING

CODE REFERENCES

Calculations per NDS 2015, IBC 2015, CBC 2016, ASCE 7-10
Load Combination Set : ASCE 7-10

Material Properties

Analysis Method : Allowable Stress Design
Load Combination : ASCE 7-10

Wood Species : Spruce - Pine - Fir
Wood Grade : No. 1/No. 2

Beam Bracing : Beam is Fully Braced against lateral-torsional buckling

Fb +	875.0 psi
Fb -	875.0 psi
Fc - Prll	1,150.0 psi
Fc - Perp	425.0 psi
Fv	135.0 psi
Ft	450.0 psi

E : Modulus of Elasticity

Ebend- xx	1,400.0 ksi
Eminbend - xx	510.0 ksi
Density	26.210 pcf

Repetitive Member Stress Increase

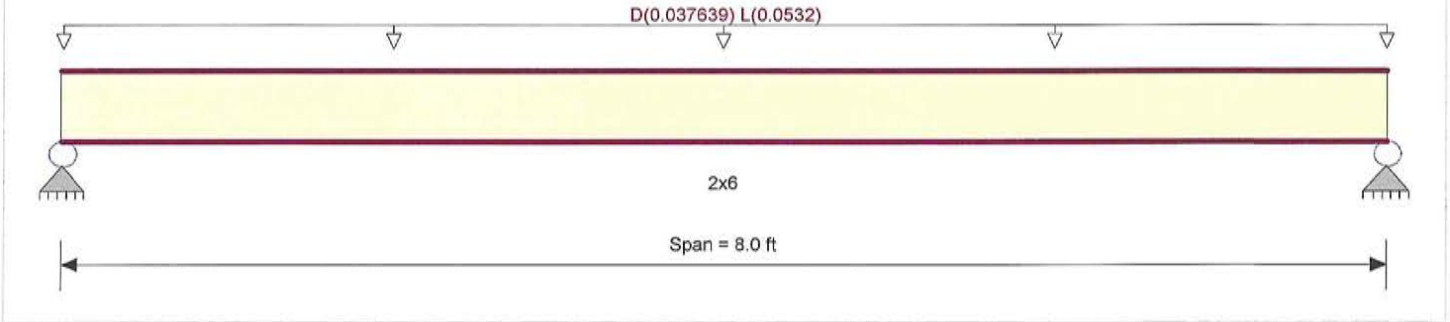

Applied Loads

Service loads entered. Load Factors will be applied for calculations.

Uniform Load : D = 0.02830, L = 0.040 ksf, Tributary Width = 1.330 ft, (FLOOR)

DESIGN SUMMARY

Design OK

Maximum Bending Stress Ratio	=	0.882 : 1	Maximum Shear Stress Ratio	=	0.436 : 1
Section used for this span		2x6	Section used for this span		2x6
fb : Actual	=	1,153.13 psi	fv : Actual	=	58.83 psi
FB : Allowable	=	1,308.13 psi	Fv : Allowable	=	135.00 psi
Load Combination		+D+L	Load Combination		+D+L
Location of maximum on span	=	4.000 ft	Location of maximum on span	=	7.562 ft
Span # where maximum occurs	=	Span # 1	Span # where maximum occurs	=	Span # 1

Maximum Deflection

Max Downward Transient Deflection	0.169 in	Ratio =	566 >=360.
Max Upward Transient Deflection	0.000 in	Ratio =	0 <360.0
Max Downward Total Deflection	0.289 in	Ratio =	331 >=240.
Max Upward Total Deflection	0.000 in	Ratio =	0 <240.0

Vertical Reactions

Support notation : Far left is #1 — Values in KIPS

Load Combination	Support 1	Support 2
Overall MAXimum	0.363	0.363
Overall MINimum	0.090	0.090
D Only	0.151	0.151
+D+L	0.363	0.363
+D+0.750L	0.310	0.310
+0.60D	0.090	0.090
L Only	0.213	0.213

RICHMOND HOFFMAYER INC.
STRUCTURAL ENGINEERING

Project Title: VILLAGE NEST
Engineer: JJH
Project Descr: MULTI UNIT PROJECT

Project ID: 2017-0610

36

Printed: 21 JUN 2017, 9:06AM

Wood Beam

File = d:\ENERCALC Projects\2017-0610.ec6
ENERCALC, INC. 1983-2017, Build:6.17.3.17, Ver:6.17.3.17

Lic. # : KW-06002886 — Licensee : RICHMOND HOFFMAYER

Description : B11 - FLOOR JOISTS w/ DECK SUPPORT

CODE REFERENCES

Calculations per NDS 2015, IBC 2015, CBC 2016, ASCE 7-10
Load Combination Set : ASCE 7-10

Material Properties

Analysis Method : Allowable Stress Design
Load Combination : ASCE 7-10

Wood Species : Trus Joist
Wood Grade : MicroLam LVL 1.9 E

Beam Bracing : Beam is Fully Braced against lateral-torsional buckling

Fb - Tension	2600 psi
Fb - Compr	2600 psi
Fc - Prll	2510 psi
Fc - Perp	750 psi
Fv	285 psi
Ft	1555 psi

E : Modulus of Elasticity

Ebend- xx	1900 ksi
Eminbend - xx	965.71 ksi
Density	42 pcf

Repetitive Member Stress Increase

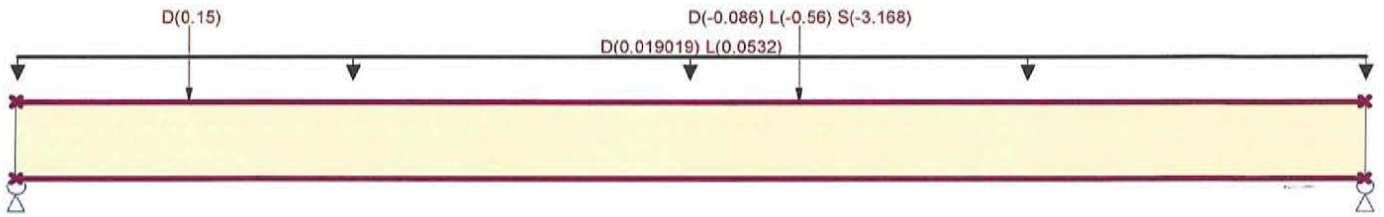

Applied Loads

Service loads entered. Load Factors will be applied for calculations.

Beam self weight calculated and added to loads
Uniform Load : D = 0.01430, L = 0.040 ksf, Tributary Width = 1.330 ft, (FLOOR)
Point Load : D = 0.150 k @ 2.0 ft, (WALL)
Point Load : D = -0.0860, L = -0.560, S = -3.168 k @ 9.0 ft, (B9)

DESIGN SUMMARY

Design OK

Maximum Bending Stress Ratio	=	0.532 1	Maximum Shear Stress Ratio	=	0.213 : 1
Section used for this span		2-1.75x11.25	Section used for this span		2-1.75x11.25
fb : Actual	=	1,829.45 psi	fv : Actual	=	69.73 psi
FB : Allowable	=	3,438.50 psi	Fv : Allowable	=	327.75 psi
Load Combination		+D+S	Load Combination		+D+S
Location of maximum on span	=	8.995 ft	Location of maximum on span	=	9.051 ft
Span # where maximum occurs	=	Span # 1	Span # where maximum occurs	=	Span # 1

Maximum Deflection

Max Downward Transient Deflection	0.002 in	Ratio =	92810 >=360.
Max Upward Transient Deflection	-0.005 in	Ratio =	33909 >=360.
Max Downward Total Deflection	0.046 in	Ratio =	4026 >=240.
Max Upward Total Deflection	-0.350 in	Ratio =	531 >=240.

Vertical Reactions

Support notation : Far left is #1 — Values in KIPS

Load Combination	Support 1	Support 2
Overall MAXimum	-1.329	-1.839
Overall MINimum	0.177	0.087
D Only	0.331	0.206
+D+L	0.508	0.293
+D+S	-0.998	-1.634
+D+0.750L	0.464	0.271
+D+0.750L+0.750S	-0.532	-1.108
+0.60D	0.199	0.123
L Only	0.177	0.087
S Only	-1.329	-1.839

RICHMOND HOFFMAYER INC.
STRUCTURAL ENGINEERING

PROJECT	VILLAGE NEST	JOB	2017-0610
CLIENT	-		
ADDRESS	EDEN, UT		
DESIGN	HUUM		
ENGINEER	J.H.	DATE	6/14/2017
	RICHMOND PE 44628 HOFFMAYER SE 3935	SHEET	37 OF

(2) $1\frac{3}{4}" \times 11\text{-}\frac{7}{8}"$ 1.9E LVL FJ

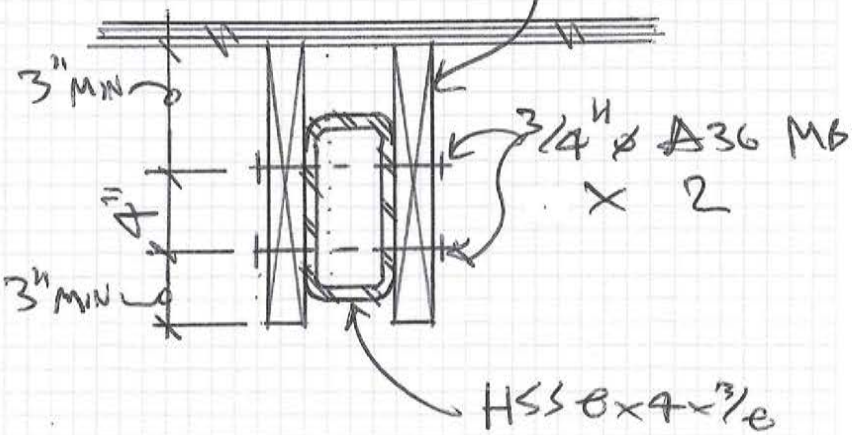

BOLT:

R = 3254 lb

↑ B9

TRY NDS TABLE 11B

SINGLE SHEAR x2

$t_m = 1\text{-}\frac{3}{4}"$

$t_s \geq \frac{1}{4}"$

G = 0.49

$Z_\perp$ = 430 lb FOR 3/4" ø

V_{CAP} = 2(430) = 860 lb

BOLTS = 3254/860 = 3.78 → (4) BOLTS MIN.

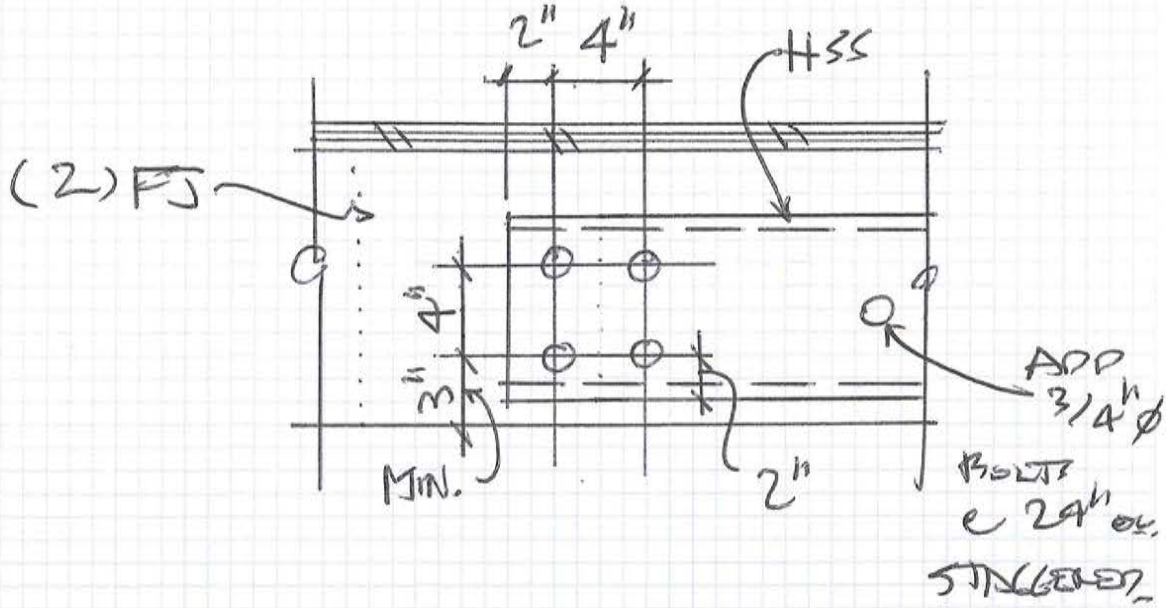

4425 CANOGA AVENUE WOODLAND HILLS CA 91364
PHONE (818) 347-7008 FAX (818) 883-8869
Info@RichmondHoffmayer.com

RICHMOND HOFFMAYER INC.
STRUCTURAL ENGINEERING

Project Title: VILLAGE NEST
Engineer: JJH
Project Descr: MULTI UNIT PROJECT

Project ID: 2017-0610

3e

Printed: 21 JUN 2017, 9:13AM

Wood Beam

File = d:\ENERCALC Projects\2017-0610.ec6
ENERCALC, INC. 1983-2017, Build:6.17.3.17, Ver:6.17.3.17

Lic. # : KW-06002886 — Licensee : RICHMOND HOFFMAYER

Description : B11 - FLOOR JOISTS w/ DECK SUPPORT

CODE REFERENCES

Calculations per NDS 2015, IBC 2015, CBC 2016, ASCE 7-10
Load Combination Set : ASCE 7-10

Material Properties

Analysis Method : Allowable Stress Design
Load Combination : ASCE 7-10

Wood Species : Trus Joist
Wood Grade : MicroLam LVL 1.9 E

Beam Bracing : Beam is Fully Braced against lateral-torsional buckling

Fb - Tension	2600 psi
Fb - Compr	2600 psi
Fc - Prll	2510 psi
Fc - Perp	750 psi
Fv	285 psi
Ft	1555 psi

E : Modulus of Elasticity

Ebend- xx	1900 ksi
Eminbend - xx	965.71 ksi
Density	42 pcf

Repetitive Member Stress Increase

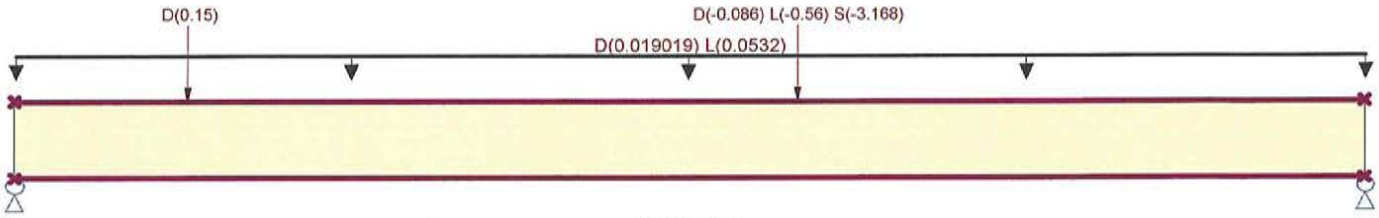

Applied Loads

Service loads entered. Load Factors will be applied for calculations.

Beam self weight calculated and added to loads
Uniform Load : D = 0.01430, L = 0.040 ksf, Tributary Width = 1.330 ft, (FLOOR)
Point Load : D = 0.150 k @ 2.0 ft, (WALL)
Point Load : D = -0.0860, L = -0.560, S = -3.168 k @ 9.0 ft, (B9)

DESIGN SUMMARY

Design OK

Maximum Bending Stress Ratio	=	0.532 1	Maximum Shear Stress Ratio	=	0.213 : 1
Section used for this span		2-1.75x11.25	Section used for this span		2-1.75x11.25
fb : Actual	=	1,829.45 psi	fv : Actual	=	69.73 psi
FB : Allowable	=	3,438.50 psi	Fv : Allowable	=	327.75 psi
Load Combination		+D+S	Load Combination		+D+S
Location of maximum on span	=	8.995 ft	Location of maximum on span	=	9.051 ft
Span # where maximum occurs	=	Span # 1	Span # where maximum occurs	=	Span # 1

Maximum Deflection

Max Downward Transient Deflection	0.002 in	Ratio =	92810 >=360.
Max Upward Transient Deflection	-0.005 in	Ratio =	33909 >=360.
Max Downward Total Deflection	0.046 in	Ratio =	4026 >=240.
Max Upward Total Deflection	-0.350 in	Ratio =	531 >=240.

Vertical Reactions

Support notation : Far left is #1 — Values in KIPS

Load Combination	Support 1	Support 2
Overall MAXimum	-1.329	-1.839
Overall MINimum	0.177	0.087
D Only	0.331	0.206
+D+L	0.508	0.293
+D+S	-0.998	-1.634
+D+0.750L	0.464	0.271
+D+0.750L+0.750S	-0.532	-1.108
+0.60D	0.199	0.123
L Only	0.177	0.087
S Only	-1.329	-1.839

RICHMOND HOFFMAYER INC.
STRUCTURAL ENGINEERING

Project Title: VILLAGE NEST
Engineer: JJH
Project Descr: MULTI UNIT PROJECT

Project ID: 2017-0610
39

Printed: 21 JUN 2017, 9:51AM

Wood Beam

File = d:\ENERCALC Projects\2017-0610.ec6
ENERCALC, INC. 1983-2017, Build:6.17.3.17, Ver:6.17.3.17

Lic. # : KW-06002886 — Licensee : RICHMOND HOFFMAYER

Description : B12 - FLOOR SUPPORT

CODE REFERENCES

Calculations per NDS 2015, IBC 2015, CBC 2016, ASCE 7-10
Load Combination Set : ASCE 7-10

Material Properties

Analysis Method : Allowable Stress Design
Load Combination : ASCE 7-10

Wood Species : Trus Joist
Wood Grade : MicroLam LVL 1.9 E

Beam Bracing : Beam is Fully Braced against lateral-torsional buckling

Fb - Tension	2600 psi
Fb - Compr	2600 psi
Fc - Prll	2510 psi
Fc - Perp	750 psi
Fv	285 psi
Ft	1555 psi

E : Modulus of Elasticity

Ebend- xx	1900 ksi
Eminbend - xx	965.71 ksi
Density	42 pcf

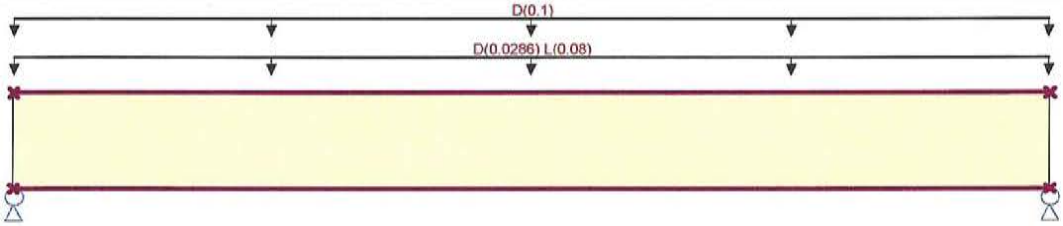

Applied Loads

Service loads entered. Load Factors will be applied for calculations.

Beam self weight calculated and added to loads
Uniform Load : D = 0.01430, L = 0.040 ksf, Tributary Width = 2.0 ft, (FLOOR)
Uniform Load : D = 0.10 , Tributary Width = 1.0 ft, (WALL)

DESIGN SUMMARY

Design OK

Maximum Bending Stress Ratio	=	0.155 : 1	Maximum Shear Stress Ratio	=	0.112 : 1
Section used for this span		2-1.75x11.87	Section used for this span		2-1.75x11.87
fb : Actual	=	402.49 psi	fv : Actual	=	31.98 psi
FB : Allowable	=	2,600.00 psi	Fv : Allowable	=	285.00 psi
Load Combination		+D+L	Load Combination		+D+L
Location of maximum on span	=	5.000 ft	Location of maximum on span	=	0.000 ft
Span # where maximum occurs	=	Span # 1	Span # where maximum occurs	=	Span # 1

Maximum Deflection

Max Downward Transient Deflection	0.020 in	Ratio =	6150>=360
Max Upward Transient Deflection	0.000 in	Ratio =	0<360
Max Downward Total Deflection	0.054 in	Ratio =	2229>=240.
Max Upward Total Deflection	0.000 in	Ratio =	0<240.0

Vertical Reactions

Support notation : Far left is #1 — Values in KIPS

Load Combination	Support 1	Support 2
Overall MAXimum	1.104	1.104
Overall MINimum	0.400	0.400
D Only	0.704	0.704
+D+L	1.104	1.104
+D+0.750L	1.004	1.004
+0.60D	0.422	0.422
L Only	0.400	0.400

RICHMOND HOFFMAYER INC.
STRUCTURAL ENGINEERING

Project Title: VILLAGE NEST
Engineer: JJH
Project Descr: MULTI UNIT PROJECT

Project ID: 2017-0610

40

Printed: 7 JUL 2017, 10:44AM

Wood Beam

File = d:\ENERCALC Projects\2017-0610.ec6
ENERCALC, INC. 1983-2017, Build:10.17.6.29, Ver:10.17.6.29
Lic. # : KW-06002886 Licensee : RICHMOND HOFFMAYER

Description : B13 - FLOOR SUPPORT ABV. STAIR

CODE REFERENCES

Calculations per NDS 2015, IBC 2015, CBC 2016, ASCE 7-10
Load Combination Set : ASCE 7-10

Material Properties

Analysis Method : Allowable Stress Design
Load Combination : ASCE 7-10

Wood Species : Trus Joist
Wood Grade : MicroLam LVL 1.9 E

Beam Bracing : Beam is Fully Braced against lateral-torsional buckling

Fb +	2,600.0 psi
Fb -	2,600.0 psi
Fc - Prll	2,510.0 psi
Fc - Perp	750.0 psi
Fv	285.0 psi
Ft	1,555.0 psi

E : Modulus of Elasticity

Ebend- xx	1,900.0 ksi
Eminbend - xx	965.71 ksi
Density	42.0 pcf

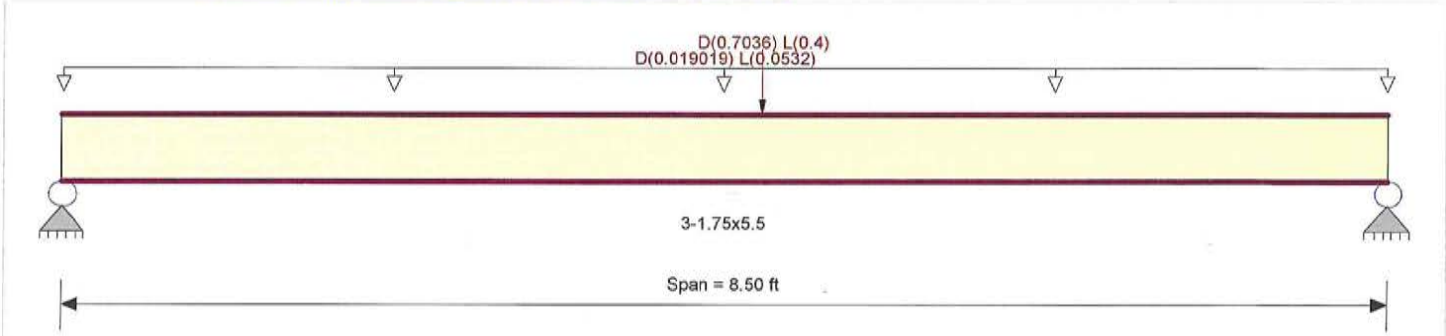

Applied Loads

Service loads entered. Load Factors will be applied for calculations.

Beam self weight calculated and added to loads
Uniform Load : D = 0.01430, L = 0.040 ksf, Tributary Width = 1.330 ft, (FLOOR)
Point Load : D = 0.7036, L = 0.40 k @ 4.50 ft, (B12)

DESIGN SUMMARY

Design OK

Maximum Bending Stress Ratio	=	0.534 : 1	Maximum Shear Stress Ratio	=	0.163 : 1
Section used for this span		3-1.75x5.5	Section used for this span		3-1.75x5.5
fb : Actual	=	1,388.15 psi	fv : Actual	=	46.34 psi
FB : Allowable	=	2,600.00 psi	Fv : Allowable	=	285.00 psi
Load Combination		+D+L	Load Combination		+D+L
Location of maximum on span	=	4.498 ft	Location of maximum on span	=	8.066 ft
Span # where maximum occurs	=	Span # 1	Span # where maximum occurs	=	Span # 1

Maximum Deflection

Max Downward Transient Deflection	0.109 in	Ratio =	932>=360
Max Upward Transient Deflection	0.000 in	Ratio =	0<360
Max Downward Total Deflection	0.245 in	Ratio =	415>=240.
Max Upward Total Deflection	0.000 in	Ratio =	0<240.0

Vertical Reactions

Support notation : Far left is #1 Values in KIPS

Load Combination	Support 1	Support 2
Overall MAXimum	0.862	0.927
Overall MINimum	0.269	0.293
D Only	0.448	0.489
+D+L	0.862	0.927
+D+0.750L	0.758	0.818
+0.60D	0.269	0.293
L Only	0.414	0.438

RICHMOND HOFFMAYER INC.
STRUCTURAL ENGINEERING

Project Title: VILLAGE NEST
Engineer: JJH
Project Descr: MULTI UNIT PROJECT

Project ID: 2017-0610

41

Printed: 21 JUN 2017, 10:01AM

Wood Beam

File = d:\ENERCALC Projects\2017-0610.ec6
ENERCALC, INC. 1983-2017, Build:6.17.3.17, Ver:6.17.3.17

Lic. # : KW-06002886 — Licensee : RICHMOND HOFFMAYER

Description : B14 - HEADERS

CODE REFERENCES

Calculations per NDS 2015, IBC 2015, CBC 2016, ASCE 7-10
Load Combination Set : ASCE 7-10

Material Properties

Analysis Method : Allowable Stress Design
Load Combination : ASCE 7-10

Wood Species : Spruce - Pine - Fir
Wood Grade : No. 1/No. 2

Beam Bracing : Completely Unbraced

Fb - Tension	875 psi
Fb - Compr	875 psi
Fc - Prll	1150 psi
Fc - Perp	425 psi
Fv	135 psi
Ft	450 psi

E : Modulus of Elasticity

Ebend- xx	1400 ksi
Eminbend - xx	510 ksi
Density	26.21 pcf

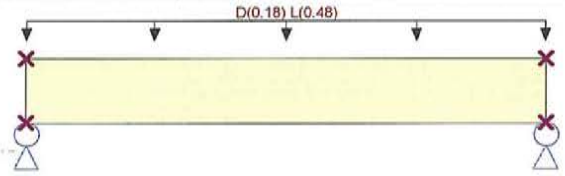

4x6

Span = 3.50 ft

Applied Loads

Service loads entered. Load Factors will be applied for calculations.

Beam self weight calculated and added to loads
Uniform Load : D = 0.0150, L = 0.040 ksf, Tributary Width = 12.0 ft, (FLOOR)

DESIGN SUMMARY

Design OK

Maximum Bending Stress Ratio	=	0.610 : 1	Maximum Shear Stress Ratio	=	0.499 : 1
Section used for this span		4x6	Section used for this span		4x6
fb : Actual	=	690.92 psi	fv : Actual	=	67.36 psi
FB : Allowable	=	1,133.19 psi	Fv : Allowable	=	135.00 psi
Load Combination		+D+L	Load Combination		+D+L
Location of maximum on span	=	1.750 ft	Location of maximum on span	=	3.053 ft
Span # where maximum occurs	=	Span # 1	Span # where maximum occurs	=	Span # 1

Maximum Deflection

Max Downward Transient Deflection	0.024 in	Ratio =	1750 >=360
Max Upward Transient Deflection	0.000 in	Ratio =	0 <360
Max Downward Total Deflection	0.033 in	Ratio =	1266 >=240.
Max Upward Total Deflection	0.000 in	Ratio =	0 <240.0

Vertical Reactions

Support notation : Far left is #1 — Values in KIPS

Load Combination	Support 1	Support 2
Overall MAXimum	1.161	1.161
Overall MINimum	0.193	0.193
D Only	0.321	0.321
+D+L	1.161	1.161
+D+0.750L	0.951	0.951
+0.60D	0.193	0.193
L Only	0.840	0.840

Wood Beam

File = d:\ENERCALC Projects\2017-0610.ec6
ENERCALC, INC. 1983-2017, Build:6.17.3.17, Ver:6.17.3.17
Lic. # : KW-06002886
Licensee : RICHMOND HOFFMAYER

Description : B15 - HEADERS

CODE REFERENCES

Calculations per NDS 2015, IBC 2015, CBC 2016, ASCE 7-10
Load Combination Set : ASCE 7-10

Material Properties

Analysis Method : Allowable Stress Design
Load Combination : ASCE 7-10

Wood Species : Trus Joist
Wood Grade : MicroLam LVL 1.9 E

Beam Bracing : Completely Unbraced

Fb - Tension	2600 psi
Fb - Compr	2600 psi
Fc - Prll	2510 psi
Fc - Perp	750 psi
Fv	285 psi
Ft	1555 psi

E : Modulus of Elasticity

Ebend- xx	1900 ksi
Eminbend - xx	965.71 ksi
Density	42 pcf

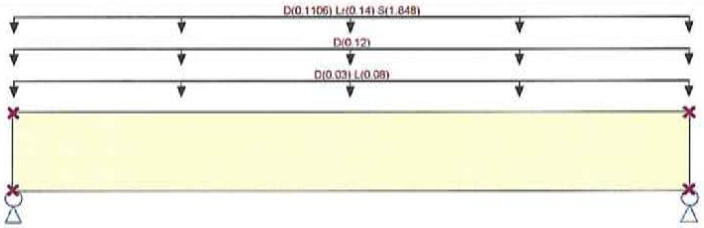

Applied Loads

Service loads entered. Load Factors will be applied for calculations.

Beam self weight calculated and added to loads
Uniform Load : D = 0.0150, L = 0.040 ksf, Tributary Width = 2.0 ft, (FLOOR)
Uniform Load : D = 0.120 , Tributary Width = 1.0 ft, (EXTERIOR WALL)
Uniform Load : D = 0.01580, Lr = 0.020, S = 0.2640 ksf, Tributary Width = 7.0 ft, (ROOF)

DESIGN SUMMARY

Design OK

Maximum Bending Stress Ratio	=	0.872 1	Maximum Shear Stress Ratio	=	0.719 : 1
Section used for this span		2-1.75x9.5	Section used for this span		2-1.75x9.5
fb : Actual	=	2,550.00 psi	fv : Actual	=	235.77 psi
FB : Allowable	=	2,925.88 psi	Fv : Allowable	=	327.75 psi
Load Combination		+D+S	Load Combination		+D+S
Location of maximum on span	=	3.250 ft	Location of maximum on span	=	5.717 ft
Span # where maximum occurs	=	Span # 1	Span # where maximum occurs	=	Span # 1

Maximum Deflection

Max Downward Transient Deflection	0.157 in	Ratio =	496>=360
Max Upward Transient Deflection	0.000 in	Ratio =	0<360
Max Downward Total Deflection	0.180 in	Ratio =	433>=240.
Max Upward Total Deflection	0.000 in	Ratio =	0<240.0

Vertical Reactions

Support notation : Far left is #1 Values in KIPS

Load Combination	Support 1	Support 2
Overall MAXimum	6.884	6.884
Overall MINimum	0.260	0.260
D Only	0.878	0.878
+D+L	1.138	1.138
+D+Lr	1.333	1.333
+D+S	6.884	6.884
+D+0.750Lr+0.750L	1.415	1.415
+D+0.750L+0.750S	5.578	5.578
+0.60D	0.527	0.527
Lr Only	0.455	0.455

RICHMOND HOFFMAYER INC.
STRUCTURAL ENGINEERING

Project Title: VILLAGE NEST
Engineer: JJH
Project Descr: MULTI UNIT PROJECT

Project ID: 2017-0610

93

Printed: 21 JUN 2017, 10:11AM

Wood Beam

File = d:\ENERCALC Projects\2017-0610.ec6
ENERCALC, INC. 1983-2017, Build:6.17.3.17, Ver:6.17.3.17

Lic. # : KW-06002886 Licensee : RICHMOND HOFFMAYER

Description : B15 - HEADERS

Vertical Reactions

Support notation : Far left is #1 Values in KIPS

Load Combination	Support 1	Support 2
L Only	0.260	0.260
S Only	6.006	6.006

Steel Beam

File = d:\ENERCALC Projects\2017-0610.ec6
ENERCALC, INC. 1983-2017, Build:6.17.3.17, Ver:6.17.3.17
Lic. # : KW-06002886
Licensee : RICHMOND HOFFMAYER

Description : B16 - BALCONY SUPPORT

CODE REFERENCES

Calculations per AISC 360-10, IBC 2015, ASCE 7-10
Load Combination Set : ASCE 7-10

Material Properties

Analysis Method : Allowable Strength Design
Beam Bracing : Beam is Fully Braced against lateral-torsional buckling
Bending Axis : Major Axis Bending

Fy : Steel Yield : 50.0 ksi
E: Modulus : 29,000.0 ksi

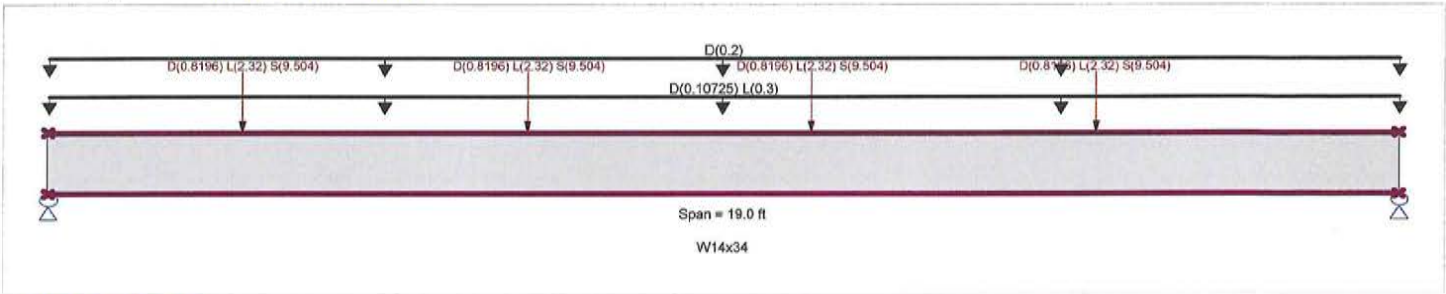

Applied Loads

Service loads entered. Load Factors will be applied for calculations.

Beam self weight calculated and added to loading
Uniform Load : D = 0.01430, L = 0.040 ksf, Tributary Width = 7.50 ft, (FLOOR)
Uniform Load : D = 0.20 k/ft, Tributary Width = 1.0 ft, (GLASS)
Point Load : D = 0.8196, L = 2.320, S = 9.504 k @ 2.750 ft, (BALCONY - B9)
Point Load : D = 0.8196, L = 2.320, S = 9.504 k @ 6.750 ft, (BALCONY - B9)
Point Load : D = 0.8196, L = 2.320, S = 9.504 k @ 10.750 ft, (BALCONY - B9)
Point Load : D = 0.8196, L = 2.320, S = 9.504 k @ 14.750 ft, (BALCONY - B9)

DESIGN SUMMARY

Design OK

Maximum Bending Stress Ratio =	0.981 : 1	Maximum Shear Stress Ratio =	0.329 : 1
Section used for this span	W14x34	Section used for this span	W14x34
Ma : Applied	133.584 k-ft	Va : Applied	26.284 k
Mn / Omega : Allowable	136.228 k-ft	Vn/Omega : Allowable	79.80 k
Load Combination	+D+0.750L+0.750S	Load Combination	+D+0.750L+0.750S
Location of maximum on span	10.749ft	Location of maximum on span	0.000 ft
Span # where maximum occurs	Span # 1	Span # where maximum occurs	Span # 1

Maximum Deflection

Max Downward Transient Deflection	0.259 in	Ratio =	878 >=360
Max Upward Transient Deflection	0.000 in	Ratio =	0 <360
Max Downward Total Deflection	0.421 in	Ratio =	541 >=240.
Max Upward Total Deflection	0.000 in	Ratio =	0 <240.0

Maximum Forces & Stresses for Load Combinations

Load Combination / Segment Length	Span #	Max Stress Ratios M	V	Summary of Moment Values Mmax +	Mmax -	Ma Max	Mnx	Mnx/Omega	Cb	Rm	Summary of Shear Values Va Max	Vnx	Vnx/Omega
D Only													
Dsgn. L = 19.00 ft	1	0.179	0.063	24.44		24.44	227.50	136.23	1.00	1.00	5.01	119.70	79.80
+D+L													
Dsgn. L = 19.00 ft	1	0.467	0.161	63.66		63.66	227.50	136.23	1.00	1.00	12.87	119.70	79.80
+D+S													
Dsgn. L = 19.00 ft	1	0.960	0.320	130.73		130.73	227.50	136.23	1.00	1.00	25.52	119.70	79.80
+D+0.750L													
Dsgn. L = 19.00 ft	1	0.395	0.137	53.85		53.85	227.50	136.23	1.00	1.00	10.90	119.70	79.80
+D+0.750L+0.750S													
Dsgn. L = 19.00 ft	1	0.981	0.329	133.58		133.58	227.50	136.23	1.00	1.00	26.28	119.70	79.80
+0.60D													
Dsgn. L = 19.00 ft	1	0.108	0.038	14.66		14.66	227.50	136.23	1.00	1.00	3.01	119.70	79.80

Overall Maximum Deflections

Load Combination	Span	Max. "-" Defl	Location in Span	Load Combination	Max. "+" Defl	Location in Span
+D+L	1	0.4214	9.500		0.0000	0.000

Vertical Reactions

Support notation : Far left is #1 Values in KIPS

Load Combination	Support 1	Support 2
Overall MAXimum	26.284	23.225

RICHMOND HOFFMAYER INC.
STRUCTURAL ENGINEERING

Project Title: VILLAGE NEST
Engineer: JJH
Project Descr: MULTI UNIT PROJECT

Project ID: 2017-0610

Printed: 21 JUN 2017, 10:48AM

Steel Beam

File = d:\ENERCALC Projects\2017-0610.ec6
ENERCALC, INC. 1983-2017, Build:6.17.3.17, Ver:6.17.3.17

Lic. # : KW-06002886 Licensee : RICHMOND HOFFMAYER

Description : B16 - BALCONY SUPPORT

Vertical Reactions

Support notation : Far left is #1 Values in KIPS

Load Combination	Support 1	Support 2
Overall MINimum	3.006	2.851
D Only	5.010	4.752
+D+L	12.867	11.875
+D+S	25.519	22.259
+D+0.750L	10.903	10.094
+D+0.750L+0.750S	26.284	23.225
+0.60D	3.006	2.851
L Only	7.856	7.124
S Only	20.509	17.507

RICHMOND HOFFMAYER INC.
STRUCTURAL ENGINEERING

Project Title: VILLAGE NEST
Engineer: JJH
Project Descr: MULTI UNIT PROJECT

Project ID: 2017-0610

46

Printed: 21 JUN 2017, 10:59AM

Steel Beam

File = d:\ENERCALC Projects\2017-0610.ec6
ENERCALC, INC. 1983-2017, Build:6.17.3.17, Ver:6.17.3.17

Lic. # : KW-06002886 — Licensee : RICHMOND HOFFMAYER

Description : B17 - RIDGE SUPPORT

CODE REFERENCES

Calculations per AISC 360-10, IBC 2015, ASCE 7-10
Load Combination Set : ASCE 7-10

Material Properties

Analysis Method : Allowable Strength Design
Beam Bracing : Beam is Fully Braced against lateral-torsional buckling
Bending Axis : Major Axis Bending

Fy : Steel Yield : 50.0 ksi
E: Modulus : 29,000.0 ksi

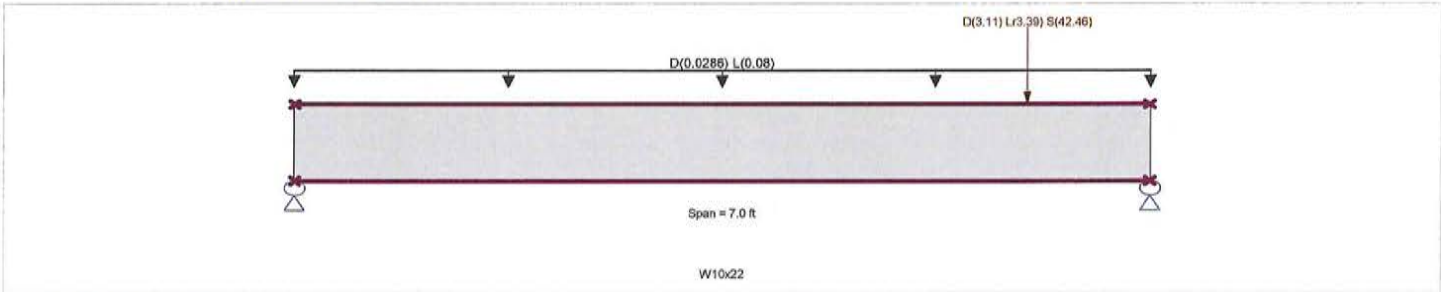

Applied Loads

Service loads entered. Load Factors will be applied for calculations.

Beam self weight calculated and added to loading
Uniform Load : D = 0.01430, L = 0.040 ksf, Tributary Width = 2.0 ft, (FLOOR)
Point Load : D = 3.110, Lr = 3.390, S = 42.460 k @ 6.0 ft, (RIDGE B4 ABV.)

DESIGN SUMMARY

Design OK

Maximum Bending Stress Ratio =	0.604 : 1	Maximum Shear Stress Ratio =	0.801 : 1
Section used for this span	W10x22	Section used for this span	W10x22
Ma : Applied	39.212 k-ft	Va : Applied	39.237 k
Mn / Omega : Allowable	64.870 k-ft	Vn/Omega : Allowable	48.960 k
Load Combination	+D+S	Load Combination	+D+S
Location of maximum on span	6.000ft	Location of maximum on span	7.000 ft
Span # where maximum occurs	Span # 1	Span # where maximum occurs	Span # 1

Maximum Deflection

Max Downward Transient Deflection	0.005 in	Ratio =	16,041 >=360
Max Upward Transient Deflection	0.000 in	Ratio =	0 <360
Max Downward Total Deflection	0.011 in	Ratio =	7760 >=240.
Max Upward Total Deflection	0.000 in	Ratio =	0 <240.0

Maximum Forces & Stresses for Load Combinations

Load Combination / Segment Length	Span #	Max Stress Ratios M	V	Summary of Moment Values Mmax +	Mmax -	Ma Max	Mnx	Mnx/Omega	Cb	Rm	Summary of Shear Values Va Max	Vnx	Vnx/Omega
D Only													
Dsgn. L = 7.00 ft	1	0.043	0.058	2.82		2.82	108.33	64.87	1.00	1.00	2.84	73.44	48.96
+D+L													
Dsgn. L = 7.00 ft	1	0.047	0.064	3.06		3.06	108.33	64.87	1.00	1.00	3.12	73.44	48.96
+D+Lr													
Dsgn. L = 7.00 ft	1	0.088	0.117	5.72		5.72	108.33	64.87	1.00	1.00	5.75	73.44	48.96
+D+S													
Dsgn. L = 7.00 ft	1	0.604	0.801	39.21		39.21	108.33	64.87	1.00	1.00	39.24	73.44	48.96
+D+0.750Lr+0.750L													
Dsgn. L = 7.00 ft	1	0.080	0.107	5.18		5.18	108.33	64.87	1.00	1.00	5.23	73.44	48.96
+D+0.750L+0.750S													
Dsgn. L = 7.00 ft	1	0.467	0.620	30.29		30.29	108.33	64.87	1.00	1.00	30.35	73.44	48.96
+0.60D													
Dsgn. L = 7.00 ft	1	0.026	0.035	1.69		1.69	108.33	64.87	1.00	1.00	1.71	73.44	48.96

Overall Maximum Deflections

Load Combination	Span	Max. "-" Defl	Location in Span	Load Combination	Max. "+" Defl	Location in Span
+D+Lr	1	0.0108	3.980		0.0000	0.000

Vertical Reactions

Support notation : Far left is #1 — Values in KIPS

Load Combination	Support 1	Support 2
Overall MAXimum	6.687	39.237
Overall MINimum	0.280	0.280
D Only	0.621	2.843

Steel Beam

Description : B17 - RIDGE SUPPORT

Vertical Reactions

Support notation : Far left is #1 Values in KIPS

Load Combination	Support 1	Support 2
+D+L	0.901	3.123
+D+Lr	1.106	5.749
+D+S	6.687	39.237
+D+0.750Lr+0.750L	1.195	5.232
+D+0.750L+0.750S	5.381	30.349
+0.60D	0.373	1.706
Lr Only	0.484	2.906
L Only	0.280	0.280
S Only	6.066	36.394

RICHMOND HOFFMAYER INC.
STRUCTURAL ENGINEERING

Project Title: VILLAGE NEST
Engineer: JJH
Project Descr: MULTI UNIT PROJECT

Project ID: 2017-0610
9c

Printed: 21 JUN 2017, 11:03AM

Steel Column

File = d:\ENERCALC Projects\2017-0610.ec6
ENERCALC, INC. 1983-2017, Build:6.17.3.17, Ver:6.17.3.17
Lic. # : KW-06002886 Licensee : RICHMOND HOFFMAYER

Description : B17 SUPPORT

Code References

Calculations per AISC 360-10, IBC 2015, CBC 2016, ASCE 7-10
Load Combinations Used : ASCE 7-10

General Information

Steel Section Name : Pipe4STD
Analysis Method : Allowable Strength
Steel Stress Grade
Fy : Steel Yield 36.0 ksi
E : Elastic Bending Modulus 29,000.0 ksi

Overall Column Height 10.0 ft
Top & Bottom Fixity Top & Bottom Pinned
Brace condition for deflection (buckling) along columns :
X-X (width) axis :
Unbraced Length for X-X Axis buckling = 10.0 ft, K = 1.0
Y-Y (depth) axis :
Unbraced Length for Y-Y Axis buckling = 10.0 ft, K = 1.0

Applied Loads

Service loads entered. Load Factors will be applied for calculations.

Column self weight included : 108.0 lbs * Dead Load Factor
AXIAL LOADS . . .
B17: Axial Load at 10.0 ft, D = 2.843, LR = 2.906, L = 0.280, S = 36.394 k

DESIGN SUMMARY

Bending & Shear Check Results

PASS Max. Axial+Bending Stress Ratio = 0.8598 : 1
Load Combination +D+S
Location of max.above base 0.0 ft
At maximum location values are . . .
Pa : Axial 39.345 k
Pn / Omega : Allowable 45.760 k
Ma-x : Applied 0.0 k-ft
Mn-x / Omega : Allowable 7.275 k-ft
Ma-y : Applied 0.0 k-ft
Mn-y / Omega : Allowable 7.275 k-ft

PASS Maximum Shear Stress Ratio = 0.0 : 1
Load Combination
Location of max.above base 0.0 ft
At maximum location values are . . .
Va : Applied 0.0 k
Vn / Omega : Allowable 0.0 k

Maximum SERVICE Load Reactions . .
Top along X-X 0.0 k
Bottom along X-X 0.0 k
Top along Y-Y 0.0 k
Bottom along Y-Y 0.0 k

Maximum SERVICE Load Deflections . . .
Along Y-Y 0.0 in at 0.0ft above base
for load combination :
Along X-X 0.0 in at 0.0ft above base
for load combination :

Load Combination Results

Load Combination	Maximum Axial + Bending Stress Ratios			Maximum Shear Ratios		
	Stress Ratio	Status	Location	Stress Ratio	Status	Location
D Only	0.064	PASS	0.00 ft	0.000	PASS	0.00 ft
+D+L	0.071	PASS	0.00 ft	0.000	PASS	0.00 ft
+D+Lr	0.128	PASS	0.00 ft	0.000	PASS	0.00 ft
+D+S	0.860	PASS	0.00 ft	0.000	PASS	0.00 ft
+D+0.750Lr+0.750L	0.117	PASS	0.00 ft	0.000	PASS	0.00 ft
+D+0.750L+0.750S	0.666	PASS	0.00 ft	0.000	PASS	0.00 ft
+0.60D	0.039	PASS	0.00 ft	0.000	PASS	0.00 ft

Maximum Reactions

Note: Only non-zero reactions are listed.

Load Combination	Axial Reaction	X-X Axis Reaction k		Y-Y Axis Reaction		Mx - End Moments k-ft		My - End Moments	
	@ Base	@ Base	@ Top	@ Base	@ Top	@ Base	@ Top	@ Base	@ Top
D Only	2.951								
+D+L	3.231								
+D+Lr	5.857								
+D+S	39.345								
+D+0.750Lr+0.750L	5.341								
+D+0.750L+0.750S	30.457								
+0.60D	1.771								

Steel Column

File = d:\ENERCALC Projects\2017-0610.ec6
ENERCALC, INC. 1983-2017, Build:6.17.3.17, Ver:6.17.3.17
Lic. # : KW-06002886
Licensee : RICHMOND HOFFMAYER

Description : B17 SUPPORT

Maximum Reactions

Note: Only non-zero reactions are listed.

Load Combination	Axial Reaction @ Base	X-X Axis Reaction @ Base	X-X Axis Reaction @ Top	k	Y-Y Axis Reaction @ Base	Y-Y Axis Reaction @ Top	Mx - End Moments @ Base	Mx - End Moments @ Top	k-ft	My - End Moments @ Base	My - End Moments @ Top
Lr Only	2.906										
L Only	0.280										
S Only	36.394										

Extreme Reactions

Item	Extreme Value	Axial Reaction @ Base	X-X Axis Reaction @ Base	X-X Axis Reaction @ Top	k	Y-Y Axis Reaction @ Base	Y-Y Axis Reaction @ Top	Mx - End Moments @ Base	Mx - End Moments @ Top	k-ft	My - End Moments @ Base	My - End Moments @ Top
Axial @ Base	Maximum	39.345										
"	Minimum	0.280										
Reaction, X-X Axis	Maximum	2.951										
"	Minimum	2.951										
Reaction, Y-Y Axis	Maximum	2.951										
"	Minimum	2.951										
Reaction, X-X Axis	Maximum	2.951										
"	Minimum	2.951										
Reaction, Y-Y Axis	Maximum	2.951										
"	Minimum	2.951										
Moment, X-X Axis Ba	Maximum	2.951										
"	Minimum	2.951										
Moment, Y-Y Axis Ba	Maximum	2.951										
"	Minimum	2.951										
Moment, X-X Axis To	Maximum	2.951										
"	Minimum	2.951										
Moment, Y-Y Axis To	Maximum	2.951										
"	Minimum	2.951										

Maximum Deflections for Load Combinations

Load Combination	Max. X-X Deflection		Distance		Max. Y-Y Deflection		Distance	
D Only	0.0000	in	0.000	ft	0.000	in	0.000	ft
+D+L	0.0000	in	0.000	ft	0.000	in	0.000	ft
+D+Lr	0.0000	in	0.000	ft	0.000	in	0.000	ft
+D+S	0.0000	in	0.000	ft	0.000	in	0.000	ft
+D+0.750Lr+0.750L	0.0000	in	0.000	ft	0.000	in	0.000	ft
+D+0.750L+0.750S	0.0000	in	0.000	ft	0.000	in	0.000	ft
+0.60D	0.0000	in	0.000	ft	0.000	in	0.000	ft
Lr Only	0.0000	in	0.000	ft	0.000	in	0.000	ft
L Only	0.0000	in	0.000	ft	0.000	in	0.000	ft
S Only	0.0000	in	0.000	ft	0.000	in	0.000	ft

Steel Section Properties : Pipe4STD

Depth	=	4.500	in	I xx	=	6.82	in^4	J	=	13.600	in^4
				S xx	=	3.03	in^3				
Diameter	=	4.500	in	R xx	=	1.510	in				
Wall Thick	=	0.237	in	Zx	=	4.050	in^3				
Area	=	2.960	in^2	I yy	=	6.820	in^4				
Weight	=	10.800	plf	S yy	=	3.030	in^3				
				R yy	=	1.510	in				
Ycg	=	0.000	in								

Steel Column

Description : B17 SUPPORT

NOTE: PAGES 51 - 98 OMITTED FROM THIS SET OF CALCS...

RICHMOND HOFFMAYER INC.
STRUCTURAL ENGINEERING

PROJECT	VILLAGE NEST	JOB	2017-0610
CLIENT	-		
ADDRESS	EDEN, UT		
DESIGN	HUUM		
ENGINEER	J.H.	DATE	6/14/2017
	RICHMOND PE 44628 HOFFMAYER SE 3435	SHEET	99 OF

SIP WALL INFORMATION:

ICC-ES ESR-1882

TRY TYPE "S" PANELS

SEISMIC DESIGN CATEGORY D - PERIODIC SPECIAL INSPECTION REQUIRED FOR FASTENING AND ANCHORING OF SHEAR WALLS.

TRY 7-1/4" PANEL CORE THICKNESS.

→ MAX HEIGHT = 10'-6"

$W_{UNIF\ ROOF} = (15.8D + 20L_r + 26S)\,14'/2 = \underline{2099\ PLF}$

$W_{UNIF\ 2ND} = (14.3D + 40L)\,8'/2 = \underline{217\ PLF}$

$W_{MAX} = 2099 + 217 = \underline{2316\ PLF}$

SEE TABLE 5 NEXT PAGE, CAP = 4326 PLF ✓

→ MAX HEADER SPAN W/O POINT LOAD = 45'

$W_{MAX} \leq 2099\ PLF$

SEE TABLE 14, PG #101, CAP = 2620 PLF ✓

DBL TRIMMER, PREMIER INSUL-BEAM II

4425 CANOGA AVENUE WOODLAND HILLS CA 91364
PHONE (818) 347-7008 FAX (818) 883-8869
Info@RichmondHoffmayer.com

TABLE 4—UNIFORM TRANSVERSE LOADS FOR FACE SUPPORTED PREMIER TYPE L PANELS[1,2,3] (psf)

PANEL CORE THICKNESS (inches)	DEFLECTION	PANEL SPAN									
		4 ft[4]	8 ft	10 ft	12 ft	14 ft	16 ft	18 ft	20 ft	22 ft	24 ft
$3^1/_2$[5]	$L/360$	98	45	32	24	16	11	----	----	----	----
	$L/240$	215	67	47	34	24	16	----	----	----	----
	$L/180$	298*	90	61	44	34	22	----	----	----	----
$5^1/_2$[6]	$L/360$	241	128	57	41	33	25	20	15	----	----
	$L/240$	288*	182*	86	60	49	37	29	22	----	----
	$L/180$	288*	182*	112*	79	65	49	39	29	----	----
$7^1/_4$[7]	$L/360$	241	168	80	65	54	42	33	24	----	----
	$L/240$	288*	188*	126	99	81	61	49	34	----	----
	$L/180$	288*	188*	133*	117*	105	80	62	44	----	----
$9^1/_4$[8]	$L/360$	274	188*	116	100	80	62	47	35	32	28
	$L/240$	326*	188*	147*	134*	120	92	70	52	46	41
	$L/180$	326*	188*	147*	134*	121*	108*	93	68	61	53
$11^1/_4$[8]	$L/360$	327*	188*	167*	140	116	90	75	57	47	36
	$L/240$	327*	188*	167*	153*	132*	110*	97*	83*	69	53
	$L/180$	327*	188*	167*	153*	132*	110*	97*	83*	83*	70

For **SI:** 1 inch = 25.4 mm, 1 psf = 47.9 Pa, 1 foot = 304.8 mm.

[1]Floor panels must have a minimum $^3/_4$-inch-thick top skin or a minimum $^7/_{16}$-inch-thick top skin overlaid with minimum $^7/_{16}$-inch-thick finish flooring perpendicular to the panels.
[2]The tabulated values are for roof and floor panels installed with simply supported single span conditions with panels supported at each end on a minimum $1^1/_2$-inch-wide continuous support in contact with the panel face. Tabulated values are applicable to panels installed with the strong axis of the OSB panel facers parallel to the panel span.
[3]Allowable loads with an asterisk, *, indicates a capacity based on the average peak test load divided by 3.
[4]Panels spanning 4 feet shall be a minimum of 8 feet long spanning a minimum of two 4 foot spans. No single span conditions must be permitted.
[5]$3^1/_2$-inch thick core panels must be limited to a maximum span of 10 feet when used in roof applications.
[6]$5^1/_2$-inch thick core panels must be limited to a maximum span of 14 feet when used in roof applications.
[7]$7^1/_4$-inch thick core panels must be limited to a maximum span of 18 feet when used in roof applications.
[8]$9^1/_4$ and $11^1/_4$-inch thick core panels shall be limited to a maximum span of 20 feet when used in roof applications.

TABLE 5—ALLOWABLE UNIFORM AXIAL LOADS FOR PREMIER TYPE S PANELS (plf)[1,2,3,4]

PANEL CORE THICKNESS (inches)	PANEL SPAN					
	8 ft	10 ft	12 ft	16 ft	20 ft	24 ft
$3^1/_2$	3,500	2,555	2,450	2,120	----	----
$5^1/_2$	4,250	4,040	3,375	3,920	2,815	----
$7^1/_4$	4,915	4,325	4,475	4,195	3,495	3,065
$9^1/_4$	4,200	4,200	4,200	4,200	3,389	3,247
$11^1/_4$	3,890	3,890	3,890	3,890	3,890	3,333

For **SI:** 1 inch = 25.4 mm, 1 plf = 14.6 N/m, 1 foot = 304.8 mm.

[1]For the allowable axial load on the fire-resistance-rated assembly, see Section 4.2.6.
[2]For combined loads; requirements in Section 4.1 must be applied.
[3]The tabulated loads are uniform axial loads applied concentrically to the full thickness of the panels, including panel facings.
[4]The tabulated values are for panels installed with strong axis of the OSB panel facers parallel to the wall height (panel span) and on concrete foundations. The member, element, or structure supporting the bearing wall panels, as shown in Figures 7, 8 and 9, must be designed for the bearing stress of the wall panels to the satisfaction to the code official.

TABLE 6—ALLOWABLE UNIFORM AXIAL LOADS FOR PREMIER TYPE L PANELS (plf)[1,2,3,4]

PANEL CORE THICKNESS (inches)	PANEL SPAN					
	8 ft	10 ft	12 ft	16 ft	20 ft	24 ft
$3^1/_2$	4,725	3,905	3,095	2,350	----	----
$5^1/_2$	5,850	5,890	4,280	4,310	2,933	----
$7^1/_4$	6,850	6,110	5,555	5,180	4,835	4,080
$9^1/_4$	5,470	5,470	5,470	5,470	5,470	4,250
$11^1/_4$	4,500	4,333	4,167	3,750	3,750	3,333

For **SI:** 1 inch = 25.4 mm, 1 plf = 14.6 N/m, 1 foot = 304.8 mm.

[1]For the allowable axial load on fire-resistance-rated assembly, see Section 4.2.7.
[2]For combined loads; requirements in Section 4.1 must be applied.
[3]The tabulated loads are uniform axial loads applied concentrically to the full thickness of the panels, including panel facings.
[4]The tabulated values are for panels installed with strong axis of the OSB panel facers parallel to the wall height (panel span) on concrete foundations. The member, element, or structure supporting the bearing wall panels, as shown in Figures 7, 8 and 9, must be designed for the bearing stress of the wall panels to the satisfaction to the code official.

Table 13: Wind Speed vs. Pressure

Wall Loads (psf) - End Zone (Zone 5) for 100sf to 500 sf effective wind area												
Mean Roof Height (ft)	90 MPH			100 MPH			110 MPH			120 MPH		
	Exp B	Exp C	Exp D	Exp B	Exp C	Exp D	Exp B	Exp C	Exp D	Exp B	Exp C	Exp D
15	-15.1	-18.3	-22.2	-18.7	-22.6	-27.5	-22.6	-27.3	-33.2	-26.9	-32.5	-39.5
20	-15.1	-19.5	-23.4	-18.7	-24.1	-29.0	-22.6	-29.2	-35.0	-26.9	-34.7	-41.7
25	-15.1	-20.4	-24.3	-18.7	-25.2	-30.1	-22.6	-30.5	-36.4	-26.9	-36.3	-43.3
30	-15.1	-21.1	-25.1	-18.7	-26.2	-31.0	-22.6	-31.6	-37.5	-26.9	-37.7	-44.7
35	-15.9	-21.9	-25.7	-19.6	-27.1	-31.8	-23.7	-32.8	-38.4	-28.2	-39.0	-45.7
40	-16.5	-22.5	-26.3	-20.4	-27.9	-32.5	-24.6	-33.7	-39.3	-29.3	-40.1	-46.8
45	-16.9	-23.1	-26.9	-20.9	-28.6	-33.3	-25.3	-34.6	-40.2	-30.1	-41.2	-47.9
50	-17.5	-23.6	-27.3	-21.7	-29.2	-33.8	-26.2	-35.3	-40.9	-31.2	-42.0	-48.7
55	-18.0	-24.0	-27.8	-22.3	-29.7	-34.4	-26.9	-35.9	-41.6	-32.0	-42.8	-49.5
60	-18.4	-24.5	-28.2	-22.8	-30.3	-35.0	-27.6	-36.6	-42.3	-32.8	-43.6	-50.3
Net Design wind pressure	-15.1			-18.7			-22.6			-26.9		

Wall Loads (psf) - End Zone (Zone 5) for 100sf to 500sf effective wind area												
Mean Roof Height (ft)	130 MPH			140 MPH			150 MPH			170 MPH		
	Exp B	Exp C	Exp D	Exp B	Exp C	Exp D	Exp B	Exp C	Exp D	Exp B	Exp C	Exp D
15	-31.6	-38.2	-46.5	-36.7	-44.4	-53.9	-42.1	-50.9	-61.9	-54.1	-65.5	-79.5
20	-31.6	-40.8	-49.0	-36.7	-47.3	-56.9	-42.1	-54.3	-65.3	-54.1	-69.8	-83.9
25	-31.6	-42.7	-50.9	-36.7	-49.5	-59.1	-42.1	-56.8	-67.8	-54.1	-73.0	-87.1
30	-31.6	-44.2	-52.5	-36.7	-51.4	-60.9	-42.1	-58.9	-69.9	-54.1	-75.7	-89.8
35	-33.2	-45.8	-53.7	-38.5	-53.2	-62.4	-44.2	-61.1	-71.6	-56.8	-78.4	-92.0
40	-34.4	-47.1	-55.0	-40.0	-54.7	-63.9	-45.9	-62.7	-73.3	-59.0	-80.6	-94.1
45	-35.4	-48.3	-56.2	-41.1	-56.2	-65.3	-47.2	-64.4	-74.9	-60.6	-82.8	-96.3
50	-36.7	-49.3	-57.2	-42.6	-57.3	-66.4	-48.8	-65.7	-76.2	-62.8	-84.4	-97.9
55	-37.6	-50.2	-58.1	-43.7	-58.4	-67.5	-50.1	-66.9	-77.5	-64.4	-86.0	-99.5
60	-38.6	-51.2	-59.1	-44.8	-59.5	-68.6	-51.4	-68.2	-78.7	-66.0	-87.6	-101.2
Net Design wind pressure	-31.6			-36.7			-42.1			-54.1		

More information on this chart can be found in Technical Bulletin #15 (www.premiersips.com).

Table 14: Premier Insul-Beam II Header Loads (plf)

No. of Trimmer Studs	Deflection	Header Span (ft.)						
		2'	3'	4'	5'	6'	7'	8'
1	L/480	3150	2100	1575	1260	1050	900	788
	L/360	3150	2100	1575	1260	1050	900	788
	L/240	3150	2100	1575	1260	1050	900	788
2	L/480	6300	4200	3150	2520	2100	1800	1545
	L/360	6300	4200	3150	2520	2100	1800	1575
	L/240	6300	4200	3150	2520	2100	1800	1575

No. of Trimmer Studs	Deflection	Header Span (ft.)							
		9'	10'	11'	12'	13'	14'	15'	16'
1	L/480	700	630	573	458	360	288	234	193
	L/360	700	630	573	525	480	384	313	257
	L/240	700	630	573	525	485	450	420	386
2	L/480	1085	791	594	458	360	288	234	193
	L/360	1400	1055	792	610	480	384	313	257
	L/240	1400	1245	792	864	720	577	469	386

Values listed for each deflection represent the least value of the bearing capacity of the trimmer, shear or bending capacity of the header or the actual deflection at the design load.
Refer to Technical Bulletin #30 for supporting headers in Premier SIPs wall panels (www.premiersips.com).
Note: Trimmer stud design capacities must be reviewed.

1-2

SINGLE TOP PLATE W/ CAP

Table 6: Maximum Allowable Axial Compression Point Loads (lbs) – Type S Panels[1,2,3,4]

Top Plate Configuration	1.5" Minimum Bearing Width	3" Minimum Bearing Width
Single 2x4 #2 or Better Hem-Fir Plate	2040	2450
Single 2x4 #2 or Better Hem-Fir Plate with 1-1/8 in. wide, 1.3E Rim Board Cap Plate	4030	4678

[1] Top plate secured to facings as required in Section 6.3
[2] Permanent loads, such as dead load, shall not exceed 0.50 times the tabulated load.
[3] Concentrated loads shall be applied concentrically to the top of the panel.
[4] Tabulated values are based on the strong-axis of the facing material oriented parallel to the span direction.

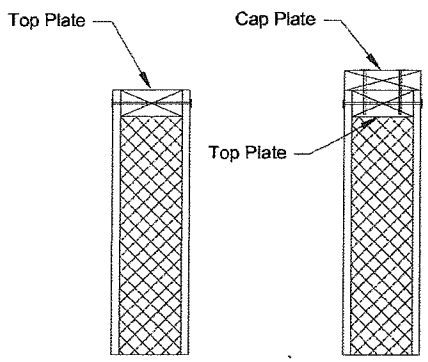

Figure 3: Top Plate Configurations

2099 PLF x 16/12 = 2799 lb LOAD FROM RA

Table 7: Maximum Allowable Uniform SIP Header Vertical Loads (plf)
3-1/2 in. through 11-1/4 in. Core Thickness[1,2]

Header Depth[3] (in)	Deflection Limit[4]	Header Span (ft)			
		4	6	8	10
12	L/480	740	384	228	142
	L/360	740	384	229	142
	L/240	740	384	229	142
18	L/480	798	574	385	311
	L/360	798	574	385	311
	L/240	798	574	385	311
24	L/480	886	629	429	361
	L/360	886	629	429	361
	L/240	886	629	429	361

Continuous over opening

[1] Vertical loads only. Lateral loads shall be transferred to the edges of the openings through continuous plate(s) designed in accordance with accepted engineering practice. Permanent loads, such as dead load, shall not exceed 0.50 times the tabulated load.
[2] Tabulated values are based on the strong-axis of the facing material oriented perpendicular to the direction of header span.
[3] Minimum depth of facing above opening.
[4] Deflection limit shall be selected by building designer based on the serviceability requirements of the structure and the requirements of adopted building code.

Table 8: Maximum Allowable Uniform Header Loads (plf)
(Panel Splice a minimum of 6 in. from edge of opening) 3-1/2 in. through 11-1/4 in. Core Thickness[1,2]

Header Depth[3] (in)	Deflection Limit[4]	Header Span (ft)			
		4	6	8	10
12	L/480	345	243	156	99
	L/360	450	295	190	125
	L/240	630	382	236	153
18	L/480	705	388	254	235
	L/360	750	482	302	281
	L/240	750	482	302	281
24	L/480	698	556	368	350
	L/360	896	556	368	350
	L/240	896	556	368	350

SIPs wall panel spline minimum 6" from edge of opening

[1] Vertical loads only. Lateral loads shall be transferred to the edges of the openings through continuous plate(s) designed in accordance with accepted engineering practice. Permanent loads, such as dead load, shall not exceed 0.50 times the tabulated load.
[2] Tabulated values are based on the strong-axis of the facing material oriented perpendicular to the direction of header span.
[3] Minimum depth of facing above opening.
[4] Deflection limit shall be selected by building designer based on the serviceability requirements of the structure and the requirements of adopted building code.

RICHMOND HOFFMAYER INC.
STRUCTURAL ENGINEERING

PROJECT	FELDSPAR LOWER	JOB	2017-0610
CLIENT	VILLAGE NEST		
ADDRESS	EDEN, UTAH		
DESIGN	HUUM		
ENGINEER	J.H.	DATE	6/16/2017
	RICHMOND PE 49628 HOFFMAYER SE 3935	SHEET	1 of 2 OF

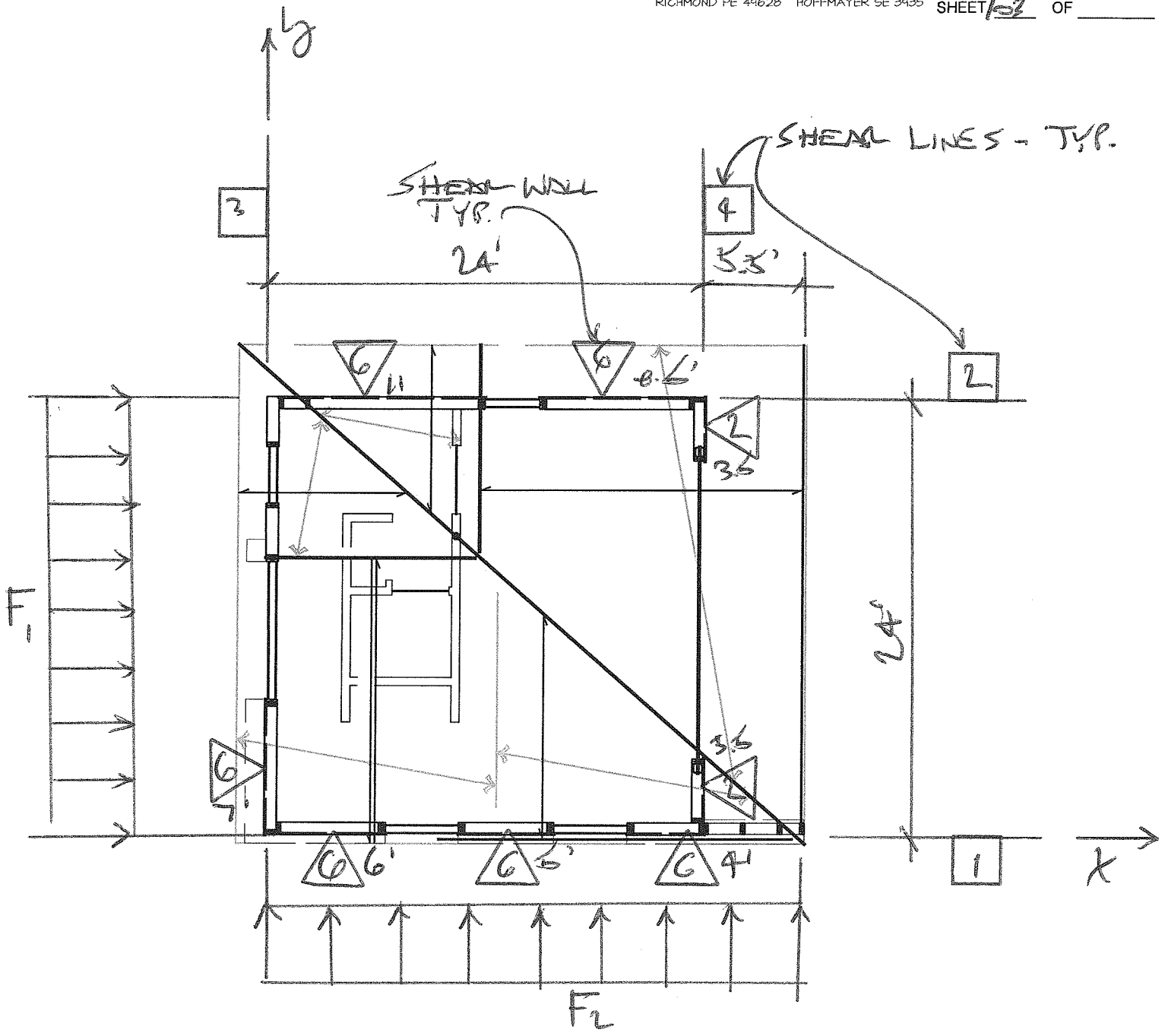

2ND FLOOR SHEAR WALL

FELDSPAR LVN

N.T.S.

* SHEAR WALL NOTE - COMPARE LENGTHS PER LINE W/ FELDSPAR LVN - USE MIN LENGTH / LINE

4425 CANOGA AVENUE WOODLAND HILLS CA 91364
PHONE (818) 347-7008 FAX (818) 883-8869
Info@RichmondHoffmayer.com

RICHMOND HOFFMAYER INC.
STRUCTURAL ENGINEERING

PROJECT	FELDSPAR LOWER	JOB	2017-0610
CLIENT	VILLAGE NEST		
ADDRESS	EDEN, UTAH		
DESIGN	HUUM		
ENGINEER	J.H.	DATE	6/16/2017
	RICHMOND PE 49628 HOFFMAYER SE 3935	SHEET	4 OF

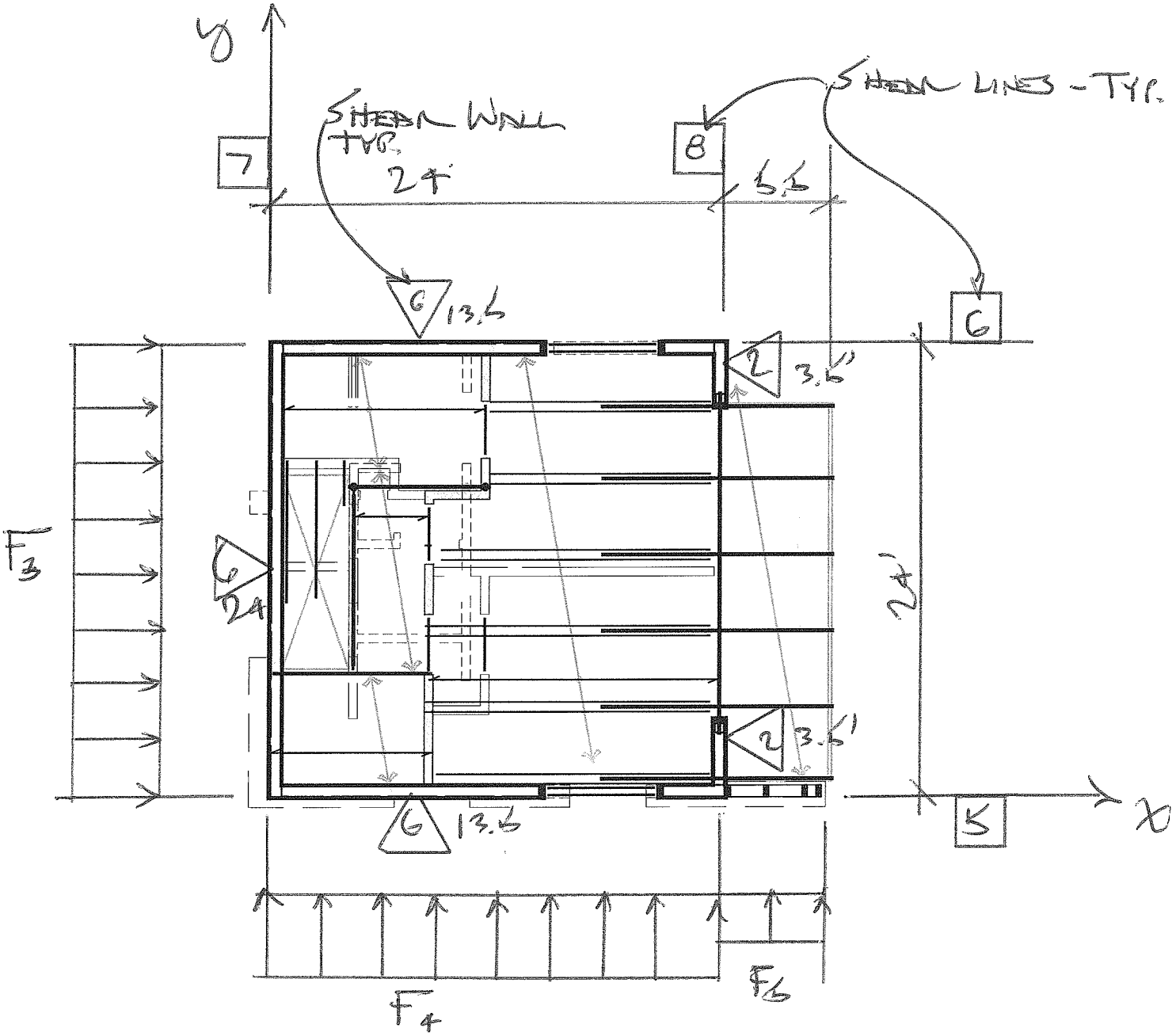

1ST FLOOR SHEAR WALLS

FELDSPAR LVN

N.T.S.

4425 CANOGA AVENUE WOODLAND HILLS CA 91364
PHONE (818) 347-7008 FAX (818) 883-8869
Info@RichmondHoffmayer.com

RICHMOND HOFFMAYER INC.
STRUCTURAL ENGINEERING

PROJECT	FELDSPAR LOWER	JOB	2017-0610
CLIENT	VILLAGE NEST		
ADDRESS	EDEN, UTAH		
DESIGN	HUUM		
ENGINEER	J.H.	DATE	6/16/2017
	RICHMOND PE 49628 HOFFMAYER SE 3935	SHEET	15 OF

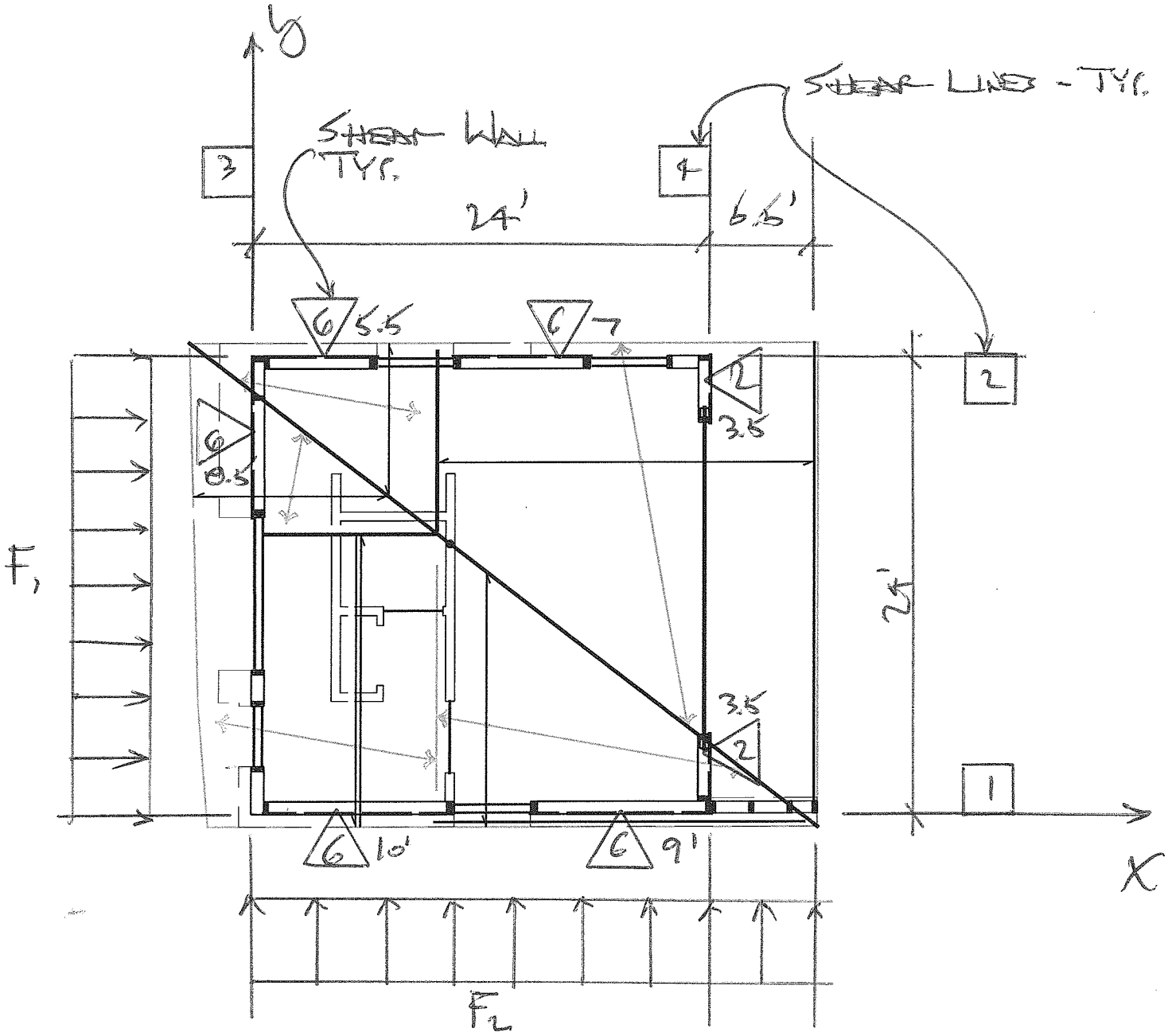

2ND FLOOR SHEAR WALLS

QUARTZ LVN
NTS

* SHEAR WALL NOTE – COMPARE LENGTHS PER LINE W/ FELDSPAR LVN – USE MIN LENGTH / LINE

4425 CANOGA AVENUE WOODLAND HILLS CA 91364
PHONE (818) 347-7008 FAX (818) 883-8869
Info@RichmondHoffmayer.com

RICHMOND HOFFMAYER INC.
STRUCTURAL ENGINEERING

PROJECT	FELDSPAR LOWER	JOB	2017-0610
CLIENT	VILLAGE NEST		
ADDRESS	EDEN, UTAH		
DESIGN	HUUM		
ENGINEER	J.H.	DATE	6/16/2017
	RICHMOND PE 49628 HOFFMAYER SE 3935	SHEET	106 OF

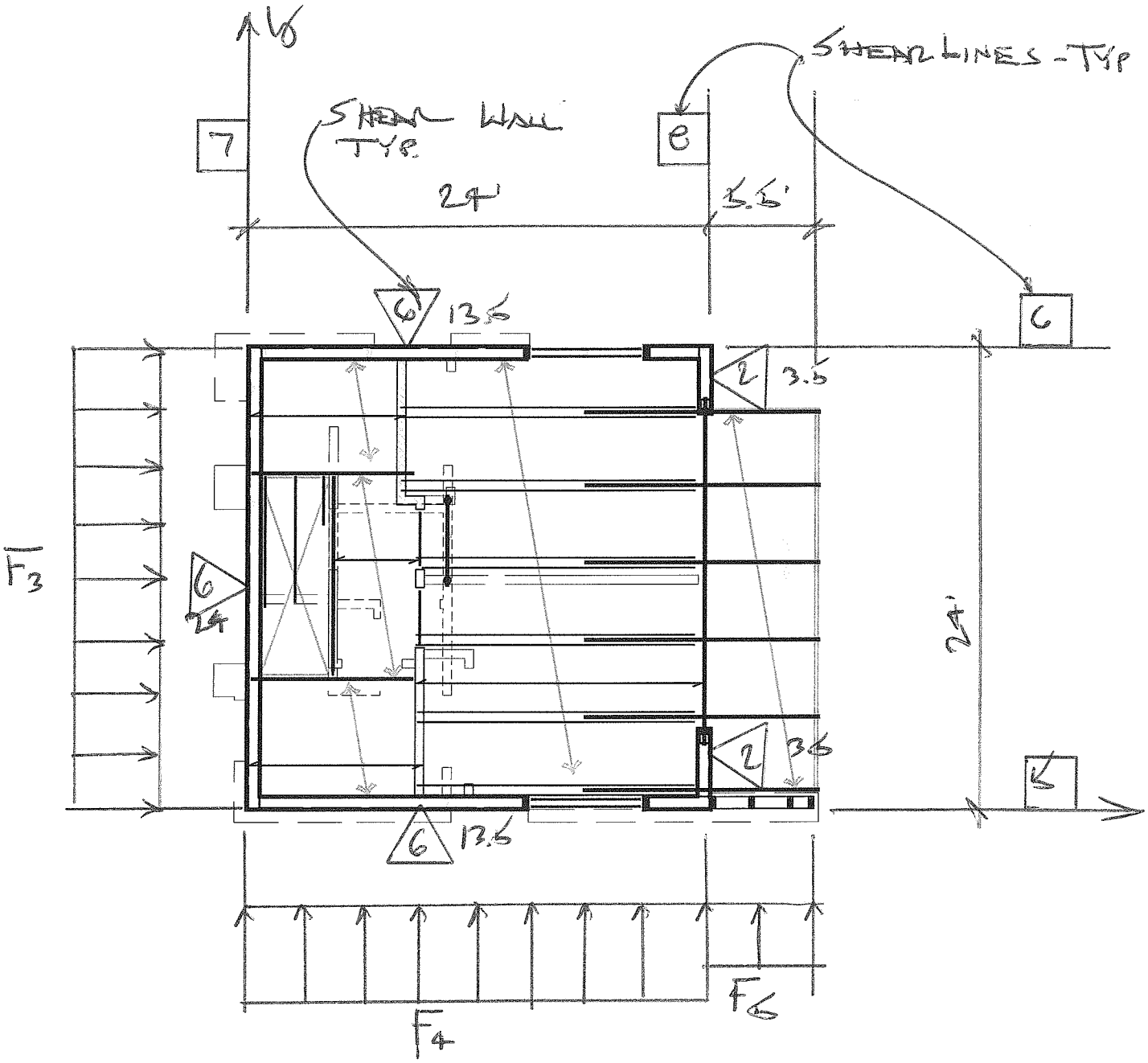

1ST FLOOR SHEAR WALLS

QUARTZ LVN

N.T.S.

4425 CANOGA AVENUE WOODLAND HILLS CA 91364
PHONE (818) 347-7008 FAX (818) 883-8869
Info@RichmondHoffmayer.com

USGS Design Maps Detailed Report

2012/2015 International Building Code (41.36°N, 111.74°W)

Site Class D – "Stiff Soil", Risk Category I/II/III

Section 1613.3.1 — Mapped acceleration parameters

Note: Ground motion values provided below are for the direction of maximum horizontal spectral response acceleration. They have been converted from corresponding geometric mean ground motions computed by the USGS by applying factors of 1.1 (to obtain S_s) and 1.3 (to obtain S_1). Maps in the 2012/2015 International Building Code are provided for Site Class B. Adjustments for other Site Classes are made, as needed, in Section 1613.3.3.

From Figure 1613.3.1(1)[1]	S_s = 0.806 g
From Figure 1613.3.1(2)[2]	S_1 = 0.267 g

Section 1613.3.2 — Site class definitions

The authority having jurisdiction (not the USGS), site-specific geotechnical data, and/or the default has classified the site as Site Class D, based on the site soil properties in accordance with Section 1613.

2010 ASCE-7 Standard – Table 20.3-1
SITE CLASS DEFINITIONS

Site Class	$\overline{v}_s$	$\overline{N}$ or $\overline{N}_{ch}$	$\overline{s}_u$
A. Hard Rock	>5,000 ft/s	N/A	N/A
B. Rock	2,500 to 5,000 ft/s	N/A	N/A
C. Very dense soil and soft rock	1,200 to 2,500 ft/s	>50	>2,000 psf
D. Stiff Soil	600 to 1,200 ft/s	15 to 50	1,000 to 2,000 psf
E. Soft clay soil	<600 ft/s	<15	<1,000 psf
	Any profile with more than 10 ft of soil having the characteristics: • Plasticity index PI > 20, • Moisture content w ≥ 40%, and • Undrained shear strength $\overline{s}_u$ < 500 psf		
F. Soils requiring site response analysis in accordance with Section 21.1	See Section 20.3.1		

For SI: 1ft/s = 0.3048 m/s 1lb/ft² = 0.0479 kN/m²

Section 1613.3.3 — Site coefficients and adjusted maximum considered earthquake spectral response acceleration parameters

TABLE 1613.3.3(1)
VALUES OF SITE COEFFICIENT F_a

Site Class	Mapped Spectral Response Acceleration at Short Period				
	$S_S \leq 0.25$	$S_S = 0.50$	$S_S = 0.75$	$S_S = 1.00$	$S_S \geq 1.25$
A	0.8	0.8	0.8	0.8	0.8
B	1.0	1.0	1.0	1.0	1.0
C	1.2	1.2	1.1	1.0	1.0
D	1.6	1.4	1.2	1.1	1.0
E	2.5	1.7	1.2	0.9	0.9
F	See Section 11.4.7 of ASCE 7				

Note: Use straight–line interpolation for intermediate values of S_S

For Site Class = D and S_s = 0.806 g, F_a = 1.178

TABLE 1613.3.3(2)
VALUES OF SITE COEFFICIENT F_v

Site Class	Mapped Spectral Response Acceleration at 1–s Period				
	$S_1 \leq 0.10$	$S_1 = 0.20$	$S_1 = 0.30$	$S_1 = 0.40$	$S_1 \geq 0.50$
A	0.8	0.8	0.8	0.8	0.8
B	1.0	1.0	1.0	1.0	1.0
C	1.7	1.6	1.5	1.4	1.3
D	2.4	2.0	1.8	1.6	1.5
E	3.5	3.2	2.8	2.4	2.4
F	See Section 11.4.7 of ASCE 7				

Note: Use straight–line interpolation for intermediate values of S_1

For Site Class = D and S_1 = 0.267 g, F_v = 1.866

Equation (16-37): $S_{MS} = F_a S_S = 1.178 \times 0.806 = 0.949$ g

Equation (16-38): $S_{M1} = F_v S_1 = 1.866 \times 0.267 = 0.498$ g

Section 1613.3.4 — Design spectral response acceleration parameters

Equation (16-39): $S_{DS} = \frac{2}{3} S_{MS} = \frac{2}{3} \times 0.949 = 0.633$ g

Equation (16-40): $S_{D1} = \frac{2}{3} S_{M1} = \frac{2}{3} \times 0.498 = 0.332$ g

Section 1613.3.5 — Determination of seismic design category

TABLE 1613.3.5(1)
SEISMIC DESIGN CATEGORY BASED ON SHORT-PERIOD (0.2 second) RESPONSE ACCELERATION

VALUE OF S_{DS}	RISK CATEGORY		
	I or II	III	IV
$S_{DS} < 0.167g$	A	A	A
$0.167g \le S_{DS} < 0.33g$	B	B	C
$0.33g \le S_{DS} < 0.50g$	C	C	D
$0.50g \le S_{DS}$	D	D	D

For Risk Category = I and S_{DS} = 0.633 g, Seismic Design Category = D

TABLE 1613.3.5(2)
SEISMIC DESIGN CATEGORY BASED ON 1-SECOND PERIOD RESPONSE ACCELERATION

VALUE OF S_{D1}	RISK CATEGORY		
	I or II	III	IV
$S_{D1} < 0.067g$	A	A	A
$0.067g \le S_{D1} < 0.133g$	B	B	C
$0.133g \le S_{D1} < 0.20g$	C	C	D
$0.20g \le S_{D1}$	D	D	D

For Risk Category = I and S_{D1} = 0.332 g, Seismic Design Category = D

Note: When S_1 is greater than or equal to 0.75g, the Seismic Design Category is **E** for buildings in Risk Categories I, II, and III, and **F** for those in Risk Category IV, irrespective of the above.

Seismic Design Category ≡ "the more severe design category in accordance with Table 1613.3.5(1) or 1613.3.5(2)" = D

Note: See Section 1613.3.5.1 for alternative approaches to calculating Seismic Design Category.

References

1. *Figure 1613.3.1(1)*: https://earthquake.usgs.gov/hazards/designmaps/downloads/pdfs/IBC-2012-Fig1613p3p1(1).pdf
2. *Figure 1613.3.1(2)*: https://earthquake.usgs.gov/hazards/designmaps/downloads/pdfs/IBC-2012-Fig1613p3p1(2).pdf

SEISMIC DESIGN:

ADDRESS	5754 DAYBREAK RIDGE, EDEN, UTAH					
	GOOGLE EARTH					
	LATITUDE	N	=	41.3600		
	LONGTITUDE	W	=	-111.7400		
	USGS NSHMP - 2012 IBC					
	BASED ON SITE CLASS B, Fa = 1.0 AND Fv = 1.0	Ss	=	0.806		
		S1	=	0.267		
2016CBC / ASCE 7-10						
1603.1.5	**EARTHQUAKE DESIGN DATA**					
1	SEISMIC IMPORTANCE FACTOR AND OCCUPANCY	I	=	1.00		
	OCCUPANCY		=	II		*ASCE 7-10 TABLE 11.5-1*
2	MAPPED SPECTRAL RESPONSE ACCELERATIONS	Ss	=	0.81		*USGS MAPS OF SPECTRAL RESPONSE*
		S1	=	0.27		
3	SITE CLASS			D		IBC DEFAULT
	SITE COEFFICIENTS	1.00	=	1.18		*TABLE 11.4-1*
		Fv	=	1.87		*TABLE 11.4-2*
4	SPECTRAL RESPONSE COEFFICIENTS	SMS	=	0.949		
		SM1	=	0.498		
		SDS	=	0.633	= 2/3 SMS	*ASCE 7-10 (11.4-3)*
		SD1	=	0.332	= 2/3 SM1	*ASCE 7-10 (11.4-4)*
5	SEISMIC DESIGN CATEGORY			D		*IBC2012 TABLES 1613.5.6(1) & 1613.5.6(2)*
MAIN BUILDING DIRECTION - X						
6	BASIC SEISMIC-FORCE-RESISTING SYSTEM					
	A. BEARING WALL SYSTEMS					
	A-LIGHT-FRAMED WALLS SHEATHED WITH WOOD PANELS					
		R	=	6.50		*ASCE 7-10 TABLE 12.2-1*
		Ωo	=	3.00		*ASCE 7-10 TABLE 12.2-1*
		Cd	=	4.00		*ASCE 7-10 TABLE 12.2-1*
7	DESIGN BASE SHEAR	V	=	Cs W		
8	SEISMIC RESPONSE COEFFICIENT	Cs	=	0.097	= SDS / (R / I)	*ASCE 7-10 (12.8-2)*
		T	=	Cu Ta		
		Cu	=	1.40		*ASCE 7-10 TABLE 12.8-1*
		hn	=	10.00	ft	
		Ct	=	0.02		*ASCE 7-10 TABLE 12.8-2*
		x	=	0.75		*ASCE 7-10 TABLE 12.8-2*
		Ta	=	0.112	= Ct hn^x	*ASCE 7-10 (12.8-7)*
		T	=	0.157	s	*ASCE 7-10 12.8.2*
		TL	=	8.00	s	*ASCE 7-10 FIG.22-16*
		Cs'	=	0.325	MAX	*ASCE 7-10 (12.8-3)*
		Cs''	=	0.010	MIN	*ASCE 7-10 (12.8-5)*
		Cs'''	=	0.010	MIN'	*ASCE 7-10 (12.8-6)*
		Cs USE	=	0.097		Cs OVERIDE 0.000
9	RESPONSE MODIFICATION FACTOR	R	=	6.50		
10	ANALYSIS PROCEDURE USED			EQUIVALENT LATERAL FORCE PROCEDURE		
		V	=	0.0973	W	*X-DIRECTION BASE SHEAR FORCE*
MAIN BUILDING DIRECTION - Y						
6	BASIC SEISMIC-FORCE-RESISTING SYSTEM					
	A. BEARING WALL SYSTEMS					
	A-LIGHT-FRAMED WALLS SHEATHED WITH WOOD PANELS					
		R	=	6.50		*ASCE 7-10 TABLE 12.2-1*
		Ωo	=	3.00		*ASCE 7-10 TABLE 12.2-1*
		Cd	=	4.00		*ASCE 7-10 TABLE 12.2-1*
7	DESIGN BASE SHEAR	V	=	Cs W		
8	SEISMIC RESPONSE COEFFICIENT	Cs	=	0.097	= SDS / (R / I)	*ASCE 7-10 (12.8-2)*
		T	=	Cu Ta		
		Cu	=	1.40		*ASCE 7-10 TABLE 12.8-1*
		hn	=	10.00	ft	
		Ct	=	0.02		*ASCE 7-10 TABLE 12.8-2*
		x	=	0.75		*ASCE 7-10 TABLE 12.8-2*
		Ta	=	0.112	= Ct hn^x	*ASCE 7-10 (12.8-7)*
		T	=	0.157	s	*ASCE 7-10 12.8.2*
		TL	=	8.00	s	*ASCE 7-10 FIG.22-16*
		Cs'	=	0.325	MAX	*ASCE 7-10 (12.8-3)*
		Cs''	=	0.010	MIN	*ASCE 7-10 (12.8-5)*
		Cs'''	=	0.010	MIN'	*ASCE 7-10 (12.8-6)*
		Cs USE	=	0.097		Cs OVERIDE 0.000
9	RESPONSE MODIFICATION FACTOR	R	=	6.50		
10	ANALYSIS PROCEDURE USED			EQUIVALENT LATERAL FORCE PROCEDURE		
		V	=	0.0973	W	*Y-DIRECTION BASE SHEAR FORCE*

RICHMOND HOFFMAYER INC.
STRUCTURAL ENGINEERING

DATE 6/27/2017
SHEET _____

AREA WEIGHTS - 2ND LEVEL:

ROOF

9.00 ft WALL HT.

WEIGHT TABULATIONS:

2X = 62496.90 lb

2Y = 58787.95 lb

WEIGHT TYPES:

A	METAL ROOF	15.76 psf	U	EXTERIOR	15.23 psf
B	OPENED BALCONY	7.00 psf	V	INTERIOR	8.85 psf
C	2nd FLOOR	14.25 psf	W	-	0.00 psf
D	DRIVEWAY LOADS	85.38 psf	X	-	0.00 psf
E	20% SNOW LOAD FOR SEISM	52.80 psf	Y	-	0.00 psf
F	GARAGE LOADS	63.50 psf	Z	-	0.00 psf

W#	F#		UNIT WEIGHT	TYPE		LENGTH		UNIT WEIGHT	TYPE		HEIGHT		NUMBER		UNIT WEIGHT	TYPE		HEIGHT		NUMBER		TRIB. WEIGHT		WIDTH		TOTAL WEIGHT
2-1	1	2X	15.76 psf	A	x	33.00 ft	+	15.23 psf	U	x	5.00 ft	x	2.00	+	8.85 psf	V	x	5.00 ft	x	1.00	=	716.44 plf	x	24.00 ft	=	17194.50 lb
		+	52.80 psf	E	x	33.00 ft	+	0.00 psf	-	x	0.00 ft	x	0.00	+	0.00 psf	-	x	0.00 ft	x	0.00	=	1742.40 plf	x	26.00 ft	=	45302.40 lb
		+	0.00 psf	-	x	0.00 ft	+	0.00 psf	-	x	0.00 ft	x	0.00	+	0.00 psf	-	x	0.00 ft	x	0.00	=	0.00 plf	x	0.00 ft	=	0.00 lb
		+	0.00 psf	-	x	0.00 ft	+	0.00 psf	-	x	0.00 ft	x	0.00	+	0.00 psf	-	x	0.00 ft	x	0.00	=	0.00 plf	x	0.00 ft	=	0.00 lb
																										62496.90 lb
2-2	2	2Y	15.76 psf	A	x	26.00 ft	+	15.23 psf	U	x	5.00 ft	x	2.00	+	0.00 psf	-	x	0.00 ft	x	0.00	=	561.90 plf	x	24.00 ft	=	13485.55 lb
		+	52.80 psf	E	x	26.00 ft	+	0.00 psf	-	x	0.00 ft	x	0.00	+	0.00 psf	-	x	0.00 ft	x	0.00	=	1372.80 plf	x	33.00 ft	=	45302.40 lb
		+	0.00 psf	-	x	0.00 ft	+	0.00 psf	-	x	0.00 ft	x	0.00	+	0.00 psf	-	x	0.00 ft	x	0.00	=	0.00 plf	x	0.00 ft	=	0.00 lb
		+	0.00 psf	-	x	0.00 ft	+	0.00 psf	-	x	0.00 ft	x	0.00	+	0.00 psf	-	x	0.00 ft	x	0.00	=	0.00 plf	x	0.00 ft	=	0.00 lb
																										58787.95 lb
2--	-	-	0.00 psf	-	x	0.00 ft	+	0.00 psf	-	x	0.00 ft	x	0.00	+	0.00 psf	-	x	0.00 ft	x	0.00	=	0.00 plf	x	0.00 ft	=	0.00 lb
		+	0.00 psf	-	x	0.00 ft	+	0.00 psf	-	x	0.00 ft	x	0.00	+	0.00 psf	-	x	0.00 ft	x	0.00	=	0.00 plf	x	0.00 ft	=	0.00 lb
		+	0.00 psf	-	x	0.00 ft	+	0.00 psf	-	x	0.00 ft	x	0.00	+	0.00 psf	-	x	0.00 ft	x	0.00	=	0.00 plf	x	0.00 ft	=	0.00 lb
		+	0.00 psf	-	x	0.00 ft	+	0.00 psf	-	x	0.00 ft	x	0.00	+	0.00 psf	-	x	0.00 ft	x	0.00	=	0.00 plf	x	0.00 ft	=	0.00 lb
																										0.00 lb
2--	-	-	0.00 psf	-	x	0.00 ft	+	0.00 psf	-	x	0.00 ft	x	0.00	+	0.00 psf	-	x	0.00 ft	x	0.00	=	0.00 plf	x	0.00 ft	=	0.00 lb
		+	0.00 psf	-	x	0.00 ft	+	0.00 psf	-	x	0.00 ft	x	0.00	+	0.00 psf	-	x	0.00 ft	x	0.00	=	0.00 plf	x	0.00 ft	=	0.00 lb
		+	0.00 psf	-	x	0.00 ft	+	0.00 psf	-	x	0.00 ft	x	0.00	+	0.00 psf	-	x	0.00 ft	x	0.00	=	0.00 plf	x	0.00 ft	=	0.00 lb
		+	0.00 psf	-	x	0.00 ft	+	0.00 psf	-	x	0.00 ft	x	0.00	+	0.00 psf	-	x	0.00 ft	x	0.00	=	0.00 plf	x	0.00 ft	=	0.00 lb
																										0.00 lb
2--	-	-	0.00 psf	-	x	0.00 ft	+	0.00 psf	-	x	0.00 ft	x	0.00	+	0.00 psf	-	x	0.00 ft	x	0.00	=	0.00 plf	x	0.00 ft	=	0.00 lb
		+	0.00 psf	-	x	0.00 ft	+	0.00 psf	-	x	0.00 ft	x	0.00	+	0.00 psf	-	x	0.00 ft	x	0.00	=	0.00 plf	x	0.00 ft	=	0.00 lb
		+	0.00 psf	-	x	0.00 ft	+	0.00 psf	-	x	0.00 ft	x	0.00	+	0.00 psf	-	x	0.00 ft	x	0.00	=	0.00 plf	x	0.00 ft	=	0.00 lb
		+	0.00 psf	-	x	0.00 ft	+	0.00 psf	-	x	0.00 ft	x	0.00	+	0.00 psf	-	x	0.00 ft	x	0.00	=	0.00 plf	x	0.00 ft	=	0.00 lb
																										0.00 lb

4425 CANOGA AVENUE WOODLAND HILLS CA 91364
PHONE (818) 347-7008 FAX (818) 883-8869

RICHMOND HOFFMAYER INC.
STRUCTURAL ENGINEERING

DATE 6/27/2017
SHEET _____

AREA WEIGHTS - 1ST LEVEL:

2ND FLOOR

9.00 ft WALL HT.

WEIGHT TABULATIONS:

1X = 18564.00 lb

1Y = 18564.00 lb

WEIGHT TYPES:

A	METAL ROOF	15.76 psf	U	EXTERIOR	15.23 psf
B	OPENED BALCONY	7.00 psf	V	INTERIOR	8.85 psf
C	2nd FLOOR	14.25 psf	W	-	0.00 psf
D	DRIVEWAY LOADS	85.38 psf	X	-	0.00 psf
E	20% SNOW LOAD FOR SEISM	52.80 psf	Y	-	0.00 psf
F	GARAGE LOADS	63.50 psf	Z	-	0.00 psf

W#	F#		UNIT WEIGHT	TYPE		LENGTH		UNIT WEIGHT	TYPE		HEIGHT		NUMBER		UNIT WEIGHT	TYPE		HEIGHT		NUMBER		TRIB. WEIGHT		WIDTH		TOTAL WEIGHT
1-3	3	1X	14.25 psf	C	x	24.00 ft	+	15.23 psf	U	x	10.00 ft	x	2.00	+	8.85 psf	V	x	10.00 ft	x	1.00	=	735.00 plf	x	24.00 ft	=	17640.00 lb
		+	7.00 psf	B	x	5.50 ft	+	0.00 psf	-	x	0.00 ft	x	0.00	+	0.00 psf	-	x	0.00 ft	x	0.00	=	38.50 plf	x	24.00 ft	=	924.00 lb
		+	0.00 psf	-	x	0.00 ft	+	0.00 psf	-	x	0.00 ft	x	0.00	+	0.00 psf	-	x	0.00 ft	x	0.00	=	0.00 plf	x	0.00 ft	=	0.00 lb
		+	0.00 psf	-	x	0.00 ft	+	0.00 psf	-	x	0.00 ft	x	0.00	+	0.00 psf	-	x	0.00 ft	x	0.00	=	0.00 plf	x	0.00 ft	=	0.00 lb
																										18564.00 lb
1-4	4	1Y	14.25 psf	C	x	24.00 ft	+	15.23 psf	U	x	10.00 ft	x	2.00	+	8.85 psf	V	x	10.00 ft	x	1.00	=	735.00 plf	x	24.00 ft	=	17640.00 lb
		+	0.00 psf	-	x	0.00 ft	+	0.00 psf	-	x	0.00 ft	x	0.00	+	0.00 psf	-	x	0.00 ft	x	0.00	=	0.00 plf	x	0.00 ft	=	0.00 lb
		+	0.00 psf	-	x	0.00 ft	+	0.00 psf	-	x	0.00 ft	x	0.00	+	0.00 psf	-	x	0.00 ft	x	0.00	=	0.00 plf	x	0.00 ft	=	0.00 lb
		+	0.00 psf	-	x	0.00 ft	+	0.00 psf	-	x	0.00 ft	x	0.00	+	0.00 psf	-	x	0.00 ft	x	0.00	=	0.00 plf	x	0.00 ft	=	0.00 lb
																										17640.00 lb
1-5	5	1Y	7.00 psf	B	x	24.00 ft	+	0.00 psf	-	x	0.00 ft	x	0.00	+	0.00 psf	-	x	0.00 ft	x	0.00	=	168.00 plf	x	5.50 ft	=	924.00 lb
		+	0.00 psf	-	x	0.00 ft	+	0.00 psf	-	x	0.00 ft	x	0.00	+	0.00 psf	-	x	0.00 ft	x	0.00	=	0.00 plf	x	0.00 ft	=	0.00 lb
		+	0.00 psf	-	x	0.00 ft	+	0.00 psf	-	x	0.00 ft	x	0.00	+	0.00 psf	-	x	0.00 ft	x	0.00	=	0.00 plf	x	0.00 ft	=	0.00 lb
		+	0.00 psf	-	x	0.00 ft	+	0.00 psf	-	x	0.00 ft	x	0.00	+	0.00 psf	-	x	0.00 ft	x	0.00	=	0.00 plf	x	0.00 ft	=	0.00 lb
																										924.00 lb
1--	-	-	0.00 psf	-	x	0.00 ft	+	0.00 psf	-	x	0.00 ft	x	0.00	+	0.00 psf	-	x	0.00 ft	x	0.00	=	0.00 plf	x	0.00 ft	=	0.00 lb
		+	0.00 psf	-	x	0.00 ft	+	0.00 psf	-	x	0.00 ft	x	0.00	+	0.00 psf	-	x	0.00 ft	x	0.00	=	0.00 plf	x	0.00 ft	=	0.00 lb
		+	0.00 psf	-	x	0.00 ft	+	0.00 psf	-	x	0.00 ft	x	0.00	+	0.00 psf	-	x	0.00 ft	x	0.00	=	0.00 plf	x	0.00 ft	=	0.00 lb
		+	0.00 psf	-	x	0.00 ft	+	0.00 psf	-	x	0.00 ft	x	0.00	+	0.00 psf	-	x	0.00 ft	x	0.00	=	0.00 plf	x	0.00 ft	=	0.00 lb
																										0.00 lb
1--	-	-	0.00 psf	-	x	0.00 ft	+	0.00 psf	-	x	0.00 ft	x	0.00	+	0.00 psf	-	x	0.00 ft	x	0.00	=	0.00 plf	x	0.00 ft	=	0.00 lb
		+	0.00 psf	-	x	0.00 ft	+	0.00 psf	-	x	0.00 ft	x	0.00	+	0.00 psf	-	x	0.00 ft	x	0.00	=	0.00 plf	x	0.00 ft	=	0.00 lb
		+	0.00 psf	-	x	0.00 ft	+	0.00 psf	-	x	0.00 ft	x	0.00	+	0.00 psf	-	x	0.00 ft	x	0.00	=	0.00 plf	x	0.00 ft	=	0.00 lb
		+	0.00 psf	-	x	0.00 ft	+	0.00 psf	-	x	0.00 ft	x	0.00	+	0.00 psf	-	x	0.00 ft	x	0.00	=	0.00 plf	x	0.00 ft	=	0.00 lb
																										0.00 lb

4425 CANOGA AVENUE WOODLAND HILLS CA 91364
PHONE (818) 347-7008 FAX (818) 883-8869

RICHMOND HOFFMAYER INC.
STRUCTURAL ENGINEERING

DATE 6/27/2017
SHEET _____

EQUIVALENT LATERAL FORCE PROCEDURE:

BASE SHEAR						
		V	=	Cs W	*ASCE 7-10 (12.8-1)*	
	TOTAL BUILDING DEAD WEIGHT - X DIRECTION	Wx	=	81060.90 lb		
	X-DIRECTION SEISMIC RESPONSE COEFICIENT	Csx	=	0.0973	SEE PREVIOUS PAGES ... Rx =	6.50
	STRENGTH LEVEL BASE SHEAR FORCE - X	Vx	=	7891.14 lb		
	TOTAL BUILDING DEAD WEIGHT - Y DIRECTION	Wy	=	77351.95 lb		
	Y-DIRECTION SEISMIC RESPONSE COEFICIENT	Csy	=	0.0973	SEE PREVIOUS PAGES ... Ry =	6.50
	STRENGTH LEVEL BASE SHEAR FORCE - Y	Vy	=	7530.08 lb		

ASCE 7-10
12.8.3 VERTICAL DISTRIBUTION OF SEISMIC FORCES
PER EACH ORTHOGONAL DIRECTION x & y

F = Cv V *ASCE 7-10 (12.8-11)*
Cv = $\frac{w h^k}{\Sigma wi hi^k}$ *ASCE 7-10 (12.8-12)*

X-DIRECTION BUILDING PERIOD T = 0.2648 s SEE PREVIOIUS PAGES
k = 1.00 *ASCE 7-10 12.8.3*

LEVEL	wx	hx	hx ^ k	wx hx ^ k	Cvx	STRENGTH SHEAR FORCE PER LEVEL Fx	Wx Csx	DISTRIBUTION FACTOR Fx / (Wx Csx)
-	0.00	0.00	0.000	0.00	0.000	0.00	0.00	0.000
-	0.00	0.00	0.000	0.00	0.000	0.00	0.00	0.000
-	0.00	0.00	0.000	0.00	0.000	0.00	0.00	0.000
-	0.00	0.00	0.000	0.00	0.000	0.00	0.00	0.000
2	62496.90	20.00	20.000	1249938.02	0.871	6870.71	6083.96	1.129
1	18564.00	10.00	10.000	185640.00	0.129	1020.43	1807.17	0.565
SUM	81060.90			1435578.02	1.000	7891.14		

Y-DIRECTION BUILDING PERIOD T = 0.2648 s SEE PREVIOIUS PAGES
k = 1.00 *ASCE 7-10 12.8.3*

LEVEL	wy	hy	hxy ^ k	wy hy ^ k	Cvy	STRENGTH SHEAR FORCE PER LEVEL Fy	Wy Csy	DISTRIBUTION FACTOR Fy / (Wy Csy)
-	0.00	0.00	0.000	0.00	0.000	0.00	0.00	0.000
-	0.00	0.00	0.000	0.00	0.000	0.00	0.00	0.000
-	0.00	0.00	0.000	0.00	0.000	0.00	0.00	0.000
-	0.00	0.00	0.000	0.00	0.000	0.00	0.00	0.000
2	58787.95	20.00	20.000	1175758.92	0.864	6503.28	5722.90	1.136
1	18564.00	10.00	10.000	185640.00	0.136	1026.80	1807.17	0.568
SUM	77351.95			1361398.92	1.000	7530.08		

SEISMIC FORCES:

4TH LEVEL FORCES -

F#		TOTAL TRIB. WEIGHT		DIST. FACTOR		Cs		DESIGN SHEAR FORCE (STRENGTH LEVEL)			DISTRIBUTION OVERIDE	R OVERIDE
-	-	0.00 plf	x	0.00	x	0.0000	=	0.00 plf	R =	0.00		
-	-	0.00 plf	x	0.00	x	0.0000	=	0.00 plf	R =	0.00		
-	-	0.00 plf	x	0.00	x	0.0000	=	0.00 plf	R =	0.00		
-	-	0.00 plf	x	0.00	x	0.0000	=	0.00 plf	R =	0.00		
-	-	0.00 plf	x	0.00	x	0.0000	=	0.00 plf	R =	0.00		
-	-	0.00 plf	x	0.00	x	0.0000	=	0.00 plf	R =	0.00		
-	-	0.00 plf	x	0.00	x	0.0000	=	0.00 plf	R =	0.00		
-	-	0.00 plf	x	0.00	x	0.0000	=	0.00 plf	R =	0.00		
-	-	0.00 plf	x	0.00	x	0.0000	=	0.00 plf	R =	0.00		
-	-	0.00 plf	x	0.00	x	0.0000	=	0.00 plf	R =	0.00		
-	-	0.00 plf	x	0.00	x	0.0000	=	0.00 plf	R =	0.00		
-	-	0.00 plf	x	0.00	x	0.0000	=	0.00 plf	R =	0.00		
-	-	0.00 plf	x	0.00	x	0.0000	=	0.00 plf	R =	0.00		
-	-	0.00 plf	x	0.00	x	0.0000	=	0.00 plf	R =	0.00		

3RD LEVEL FORCES -

F#		TOTAL TRIB. WEIGHT		DIST. FACTOR		Cs		DESIGN SHEAR FORCE (STRENGTH LEVEL)			DISTRIBUTION OVERIDE	R OVERIDE
-	-	0.00 plf	x	0.00	x	0.0000	=	0.00 plf	R =	0.00		
-	-	0.00 plf	x	0.00	x	0.0000	=	0.00 plf	R =	0.00		
-	-	0.00 plf	x	0.00	x	0.0000	=	0.00 plf	R =	0.00		
-	-	0.00 plf	x	0.00	x	0.0000	=	0.00 plf	R =	0.00		
-	-	0.00 plf	x	0.00	x	0.0000	=	0.00 plf	R =	0.00		
-	-	0.00 plf	x	0.00	x	0.0000	=	0.00 plf	R =	0.00		
-	-	0.00 plf	x	0.00	x	0.0000	=	0.00 plf	R =	0.00		
-	-	0.00 plf	x	0.00	x	0.0000	=	0.00 plf	R =	0.00		
-	-	0.00 plf	x	0.00	x	0.0000	=	0.00 plf	R =	0.00		
-	-	0.00 plf	x	0.00	x	0.0000	=	0.00 plf	R =	0.00		
-	-	0.00 plf	x	0.00	x	0.0000	=	0.00 plf	R =	0.00		
-	-	0.00 plf	x	0.00	x	0.0000	=	0.00 plf	R =	0.00		
-	-	0.00 plf	x	0.00	x	0.0000	=	0.00 plf	R =	0.00		
-	-	0.00 plf	x	0.00	x	0.0000	=	0.00 plf	R =	0.00		

2ND LEVEL FORCES ROOF

F#		TOTAL TRIB. WEIGHT		DIST. FACTOR		Cs		DESIGN SHEAR FORCE (STRENGTH LEVEL)			DISTRIBUTION OVERIDE	R OVERIDE
1	2X	2403.73 plf	x	1.13	x	0.0973	=	264.26 plf	R =	6.50		
2	2Y	1781.45 plf	x	1.14	x	0.0973	=	197.07 plf	R =	6.50		
-	-	0.00 plf	x	0.00	x	0.0000	=	0.00 plf	R =	0.00		
-	-	0.00 plf	x	0.00	x	0.0000	=	0.00 plf	R =	0.00		
-	-	0.00 plf	x	0.00	x	0.0000	=	0.00 plf	R =	0.00		
-	-	0.00 plf	x	0.00	x	0.0000	=	0.00 plf	R =	0.00		
-	-	0.00 plf	x	0.00	x	0.0000	=	0.00 plf	R =	0.00		
-	-	0.00 plf	x	0.00	x	0.0000	=	0.00 plf	R =	0.00		
-	-	0.00 plf	x	0.00	x	0.0000	=	0.00 plf	R =	0.00		
-	-	0.00 plf	x	0.00	x	0.0000	=	0.00 plf	R =	0.00		
-	-	0.00 plf	x	0.00	x	0.0000	=	0.00 plf	R =	0.00		
-	-	0.00 plf	x	0.00	x	0.0000	=	0.00 plf	R =	0.00		
-	-	0.00 plf	x	0.00	x	0.0000	=	0.00 plf	R =	0.00		
-	-	0.00 plf	x	0.00	x	0.0000	=	0.00 plf	R =	0.00		

1ST LEVEL FORCES 2ND FLOOR

F#		TOTAL TRIB. WEIGHT		DIST. FACTOR		Cs		DESIGN SHEAR FORCE (STRENGTH LEVEL)			DISTRIBUTION OVERIDE	R OVERIDE
3	1X	773.50 plf	x	0.56	x	0.0973	=	42.52 plf	R =	6.50		
4	1Y	735.00 plf	x	0.57	x	0.0973	=	40.65 plf	R =	6.50		
5	1Y	168.00 plf	x	0.57	x	0.0973	=	9.29 plf	R =	6.50		
-	-	0.00 plf	x	0.00	x	0.0000	=	0.00 plf	R =	0.00		
-	-	0.00 plf	x	0.00	x	0.0000	=	0.00 plf	R =	0.00		
-	-	0.00 plf	x	0.00	x	0.0000	=	0.00 plf	R =	0.00		
-	-	0.00 plf	x	0.00	x	0.0000	=	0.00 plf	R =	0.00		
-	-	0.00 plf	x	0.00	x	0.0000	=	0.00 plf	R =	0.00		
-	-	0.00 plf	x	0.00	x	0.0000	=	0.00 plf	R =	0.00		
-	-	0.00 plf	x	0.00	x	0.0000	=	0.00 plf	R =	0.00		
-	-	0.00 plf	x	0.00	x	0.0000	=	0.00 plf	R =	0.00		
-	-	0.00 plf	x	0.00	x	0.0000	=	0.00 plf	R =	0.00		
-	-	0.00 plf	x	0.00	x	0.0000	=	0.00 plf	R =	0.00		
-	-	0.00 plf	x	0.00	x	0.0000	=	0.00 plf	R =	0.00		

SEISMIC FORCES TO SHEAR LINES:

2ND LEVEL ROOF

SHEAR LINE FORCES

LINE		F#			FORCE		WIDTH		X BAR		L		R DESIGN		R REQ'D		% LOAD EFFECT			
1		F1	-	(	264.26 plf	) x	24.00	x	1.00	/	2.00	x	6.50	/	6.50	x	1.00	/	1.00	= 3171.09 lb
	+	-	-	(		) x	0.00	x	0.00	/	0.00	x	0.00	/	0.00	x	1.00	/	1.00	= 0.00 lb
	+	-	-	(		) x	0.00	x	0.00	/	0.00	x	0.00	/	0.00	x	1.00	/	1.00	= 0.00 lb
	+	-	-	(		) x	0.00	x	0.00	/	0.00	x	0.00	/	0.00	x	1.00	/	1.00	= 0.00 lb
	+	-	-	(		) x	0.00	x	0.00	/	0.00	x	0.00	/	0.00	x	1.00	/	1.00	= 0.00 lb
	+	-	-	(		) x	0.00	x	0.00	/	0.00	x	0.00	/	0.00	x	1.00	/	1.00	= 0.00 lb
	+	-			(-	) x			0.00	/	0.00	x	0.00	/	0.00	x	1.00	/	1.00	= 0.00 lb
													6.50							3171.09 lb

SHEAR LINE FORCES

LINE		F#			FORCE		WIDTH		X BAR		L		R DESIGN		R REQ'D		% LOAD EFFECT			
2		F1	-	(	264.26 plf	) x	24.00	x	1.00	/	2.00	x	6.50	/	6.50	x	1.00	/	1.00	= 3171.09 lb
	+	-	-	(		) x	0.00	x	0.00	/	0.00	x	0.00	/	0.00	x	1.00	/	1.00	= 0.00 lb
	+	-	-	(		) x	0.00	x	0.00	/	0.00	x	0.00	/	0.00	x	1.00	/	1.00	= 0.00 lb
	+	-	-	(		) x	0.00	x	0.00	/	0.00	x	0.00	/	0.00	x	1.00	/	1.00	= 0.00 lb
	+	-	-	(		) x	0.00	x	0.00	/	0.00	x	0.00	/	0.00	x	1.00	/	1.00	= 0.00 lb
	+	-	-	(		) x	0.00	x	0.00	/	0.00	x	0.00	/	0.00	x	1.00	/	1.00	= 0.00 lb
	+	-			(-	) x			0.00	/	0.00	x	0.00	/	0.00	x	1.00	/	1.00	= 0.00 lb
													6.50							3171.09 lb

SHEAR LINE FORCES

LINE		F#			FORCE		WIDTH		X BAR		L		R DESIGN		R REQ'D		% LOAD EFFECT			
3		F2	-	(	197.07 plf	) x	24.00	x	1.00	/	2.00	x	6.50	/	6.50	x	1.00	/	1.00	= 2364.83 lb
	+	-	-	(		) x	0.00	x	0.00	/	0.00	x	0.00	/	0.00	x	1.00	/	1.00	= 0.00 lb
	+	-	-	(		) x	0.00	x	0.00	/	0.00	x	0.00	/	0.00	x	1.00	/	1.00	= 0.00 lb
	+	-	-	(		) x	0.00	x	0.00	/	0.00	x	0.00	/	0.00	x	1.00	/	1.00	= 0.00 lb
	+	-	-	(		) x	0.00	x	0.00	/	0.00	x	0.00	/	0.00	x	1.00	/	1.00	= 0.00 lb
	+	-	-	(		) x	0.00	x	0.00	/	0.00	x	0.00	/	0.00	x	1.00	/	1.00	= 0.00 lb
	+	-			(-	) x			0.00	/	0.00	x	0.00	/	0.00	x	1.00	/	1.00	= 0.00 lb
													6.50							2364.83 lb

SHEAR LINE FORCES

LINE		F#			FORCE		WIDTH		X BAR		L		R DESIGN		R REQ'D		% LOAD EFFECT			
4		F2	-	(	197.07 plf	) x	24.00	x	1.00	/	2.00	x	6.50	/	6.50	x	1.00	/	1.00	= 2364.83 lb
	+	F2	-	(	197.07 plf	) x	5.50	x	26.75	/	24.00	x	6.50	/	6.50	x	1.00	/	1.00	= 1208.07 lb
	+	-	-	(		) x	0.00	x	0.00	/	0.00	x	0.00	/	0.00	x	1.00	/	1.00	= 0.00 lb
	+	-	-	(		) x	0.00	x	0.00	/	0.00	x	0.00	/	0.00	x	1.00	/	1.00	= 0.00 lb
	+	-	-	(		) x	0.00	x	0.00	/	0.00	x	0.00	/	0.00	x	1.00	/	1.00	= 0.00 lb
	+	-	-	(		) x	0.00	x	0.00	/	0.00	x	0.00	/	0.00	x	1.00	/	1.00	= 0.00 lb
	+	-			(-	) x			0.00	/	0.00	x	0.00	/	0.00	x	1.00	/	1.00	= 0.00 lb
													6.50							3572.90 lb

SHEAR LINE FORCES

LINE		F#			FORCE		WIDTH		X BAR		L		R DESIGN		R REQ'D		% LOAD EFFECT			
-		-	-	(		) x	0.00	x	0.00	/	0.00	x	0.00	/	0.00	x	1.00	/	1.00	= 0.00 lb
	+	-	-	(		) x	0.00	x	0.00	/	0.00	x	0.00	/	0.00	x	1.00	/	1.00	= 0.00 lb
	+	-	-	(		) x	0.00	x	0.00	/	0.00	x	0.00	/	0.00	x	1.00	/	1.00	= 0.00 lb
	+	-	-	(		) x	0.00	x	0.00	/	0.00	x	0.00	/	0.00	x	1.00	/	1.00	= 0.00 lb
	+	-	-	(		) x	0.00	x	0.00	/	0.00	x	0.00	/	0.00	x	1.00	/	1.00	= 0.00 lb
	+	-	-	(		) x	0.00	x	0.00	/	0.00	x	0.00	/	0.00	x	1.00	/	1.00	= 0.00 lb
	+	-			(-	) x			0.00	/	0.00	x	0.00	/	0.00	x	1.00	/	1.00	= 0.00 lb
													100.00							0.00 lb

SEISMIC FORCES TO SHEAR LINES:

1ST LEVEL 2ND FLOOR

SHEAR LINE FORCES

LINE		F#			FORCE			WIDTH		X BAR		L		R DESIGN		R REQ'D		% LOAD EFFECT			
5		F3	-	(	42.52 plf		) x	24.00	x	1.00	/	2.00	x	6.50	/	6.50	x	1.00	/	1.00	= 510.22 lb
	+	-	LINE1	(		3171.09 lb	) x	1.00	x	1.00	/	1.00	x	6.50	/	6.50	x	1.00	/	1.00	= 3171.09 lb
	+	-	-	(			) x	0.00	x	0.00	/	0.00	x	0.00	/	0.00	x	1.00	/	1.00	= 0.00 lb
	+	-	-	(			) x	0.00	x	0.00	/	0.00	x	0.00	/	0.00	x	1.00	/	1.00	= 0.00 lb
	+	-	-	(			) x	0.00	x	0.00	/	0.00	x	0.00	/	0.00	x	1.00	/	1.00	= 0.00 lb
	+	-	-	(			) x	0.00	x	0.00	/	0.00	x	0.00	/	0.00	x	1.00	/	1.00	= 0.00 lb
	+	-			(	-	) x			0.00	/	0.00	x	0.00	/	0.00	x	1.00	/	1.00	= 0.00 lb
														6.50							3681.31 lb

SHEAR LINE FORCES

LINE		F#			FORCE			WIDTH		X BAR		L		R DESIGN		R REQ'D		% LOAD EFFECT			
6		F3	-	(	42.52 plf		) x	24.00	x	1.00	/	2.00	x	6.50	/	6.50	x	1.00	/	1.00	= 510.22 lb
	+	-	LINE2	(		3171.09 lb	) x	1.00	x	1.00	/	1.00	x	6.50	/	6.50	x	1.00	/	1.00	= 3171.09 lb
	+	-	-	(			) x	0.00	x	0.00	/	0.00	x	0.00	/	0.00	x	1.00	/	1.00	= 0.00 lb
	+	-	-	(			) x	0.00	x	0.00	/	0.00	x	0.00	/	0.00	x	1.00	/	1.00	= 0.00 lb
	+	-	-	(			) x	0.00	x	0.00	/	0.00	x	0.00	/	0.00	x	1.00	/	1.00	= 0.00 lb
	+	-	-	(			) x	0.00	x	0.00	/	0.00	x	0.00	/	0.00	x	1.00	/	1.00	= 0.00 lb
	+	-			(	-	) x			0.00	/	0.00	x	0.00	/	0.00	x	1.00	/	1.00	= 0.00 lb
														6.50							3681.31 lb

SHEAR LINE FORCES

LINE		F#			FORCE			WIDTH		X BAR		L		R DESIGN		R REQ'D		% LOAD EFFECT			
7		F4	-	(	40.65 plf		) x	24.00	x	1.00	/	2.00	x	6.50	/	6.50	x	1.00	/	1.00	= 487.85 lb
	+	-	LINE3	(		2364.83 lb	) x	1.00	x	1.00	/	1.00	x	6.50	/	6.50	x	1.00	/	1.00	= 2364.83 lb
	+	-	-	(			) x	0.00	x	0.00	/	0.00	x	0.00	/	0.00	x	1.00	/	1.00	= 0.00 lb
	+	-	-	(			) x	0.00	x	0.00	/	0.00	x	0.00	/	0.00	x	1.00	/	1.00	= 0.00 lb
	+	-	-	(			) x	0.00	x	0.00	/	0.00	x	0.00	/	0.00	x	1.00	/	1.00	= 0.00 lb
	+	-	-	(			) x	0.00	x	0.00	/	0.00	x	0.00	/	0.00	x	1.00	/	1.00	= 0.00 lb
	+	-			(	-	) x			0.00	/	0.00	x	0.00	/	0.00	x	1.00	/	1.00	= 0.00 lb
														6.50							2852.67 lb

SHEAR LINE FORCES

LINE		F#			FORCE			WIDTH		X BAR		L		R DESIGN		R REQ'D		% LOAD EFFECT			
8		F4	-	(	40.65 plf		) x	24.00	x	1.00	/	2.00	x	6.50	/	6.50	x	1.00	/	1.00	= 487.85 lb
	+	F5	-	(	9.29 plf		) x	5.50	x	26.75	/	24.00	x	6.50	/	6.50	x	1.00	/	1.00	= 56.96 lb
	+	-	LINE4	(		3572.90 lb	) x	1.00	x	1.00	/	1.00	x	6.50	/	6.50	x	1.00	/	1.00	= 3572.90 lb
	+	-	-	(			) x	0.00	x	0.00	/	0.00	x	0.00	/	0.00	x	1.00	/	1.00	= 0.00 lb
	+	-	-	(			) x	0.00	x	0.00	/	0.00	x	0.00	/	0.00	x	1.00	/	1.00	= 0.00 lb
	+	-	-	(			) x	0.00	x	0.00	/	0.00	x	0.00	/	0.00	x	1.00	/	1.00	= 0.00 lb
	+	-			(	-	) x			0.00	/	0.00	x	0.00	/	0.00	x	1.00	/	1.00	= 0.00 lb
														6.50							4117.71 lb

SHEAR LINE FORCES

LINE		F#			FORCE			WIDTH		X BAR		L		R DESIGN		R REQ'D		% LOAD EFFECT			
-		-	-	(			) x	0.00	x	0.00	/	0.00	x	0.00	/	0.00	x	1.00	/	1.00	= 0.00 lb
	+	-	-	(			) x	0.00	x	0.00	/	0.00	x	0.00	/	0.00	x	1.00	/	1.00	= 0.00 lb
	+	-	-	(			) x	0.00	x	0.00	/	0.00	x	0.00	/	0.00	x	1.00	/	1.00	= 0.00 lb
	+	-	-	(			) x	0.00	x	0.00	/	0.00	x	0.00	/	0.00	x	1.00	/	1.00	= 0.00 lb
	+	-	-	(			) x	0.00	x	0.00	/	0.00	x	0.00	/	0.00	x	1.00	/	1.00	= 0.00 lb
	+	-	-	(			) x	0.00	x	0.00	/	0.00	x	0.00	/	0.00	x	1.00	/	1.00	= 0.00 lb
	+	-			(	-	) x			0.00	/	0.00	x	0.00	/	0.00	x	1.00	/	1.00	= 0.00 lb
														100.00							0.00 lb

REDUNDANCY CHECK:

IN LIEU OF CHECKING REDUNDANCY ON EACH SHEAR LINE, USE DEFAULT VALUE OF rho = 1.3

STRENGTH DESIGN SHEAR FORCE SUMMARY:

	LINE	FORCE		rho		V SEISMIC (STRENGTH)		ϕ		V SEISMIC (ASD)
	-	0.00 lb	x	1.30	=	0.00 lb	x	0.70	=	0.00 lb
	-	0.00 lb	x	1.30	=	0.00 lb	x	0.70	=	0.00 lb
	-	0.00 lb	x	1.30	=	0.00 lb	x	0.70	=	0.00 lb
	-	0.00 lb	x	1.30	=	0.00 lb	x	0.70	=	0.00 lb
	-	0.00 lb	x	1.30	=	0.00 lb	x	0.70	=	0.00 lb
	-	0.00 lb	x	1.30	=	0.00 lb	x	0.70	=	0.00 lb
	-	0.00 lb	x	1.30	=	0.00 lb	x	0.70	=	0.00 lb
	-	0.00 lb	x	1.30	=	0.00 lb	x	0.70	=	0.00 lb
	-	0.00 lb	x	1.30	=	0.00 lb	x	0.70	=	0.00 lb
	-	0.00 lb	x	1.30	=	0.00 lb	x	0.70	=	0.00 lb
	-	0.00 lb	x	1.30	=	0.00 lb	x	0.70	=	0.00 lb
	-	0.00 lb	x	1.30	=	0.00 lb	x	0.70	=	0.00 lb
	-	0.00 lb	x	1.30	=	0.00 lb	x	0.70	=	0.00 lb
	-	0.00 lb	x	1.30	=	0.00 lb	x	0.70	=	0.00 lb
	-	0.00 lb	x	1.30	=	0.00 lb	x	0.70	=	0.00 lb
	-	0.00 lb	x	1.30	=	0.00 lb	x	0.70	=	0.00 lb
	-	0.00 lb	x	1.30	=	0.00 lb	x	0.70	=	0.00 lb
	-	0.00 lb	x	1.30	=	0.00 lb	x	0.70	=	0.00 lb
	-	0.00 lb	x	1.30	=	0.00 lb	x	0.70	=	0.00 lb
	-	0.00 lb	x	1.30	=	0.00 lb	x	0.70	=	0.00 lb
	-	0.00 lb	x	1.30	=	0.00 lb	x	0.70	=	0.00 lb
	-	0.00 lb	x	1.30	=	0.00 lb	x	0.70	=	0.00 lb
	-	0.00 lb	x	1.30	=	0.00 lb	x	0.70	=	0.00 lb
	-	0.00 lb	x	1.30	=	0.00 lb	x	0.70	=	0.00 lb
	-	0.00 lb	x	1.30	=	0.00 lb	x	0.70	=	0.00 lb
	-	0.00 lb	x	1.30	=	0.00 lb	x	0.70	=	0.00 lb
	-	0.00 lb	x	1.30	=	0.00 lb	x	0.70	=	0.00 lb
	-	0.00 lb	x	1.30	=	0.00 lb	x	0.70	=	0.00 lb
	-	0.00 lb	x	1.30	=	0.00 lb	x	0.70	=	0.00 lb
	-	0.00 lb	x	1.30	=	0.00 lb	x	0.70	=	0.00 lb
	-	0.00 lb	x	1.30	=	0.00 lb	x	0.70	=	0.00 lb
	-	0.00 lb	x	1.30	=	0.00 lb	x	0.70	=	0.00 lb
	-	0.00 lb	x	1.30	=	0.00 lb	x	0.70	=	0.00 lb
	-	0.00 lb	x	1.30	=	0.00 lb	x	0.70	=	0.00 lb
	-	0.00 lb	x	1.30	=	0.00 lb	x	0.70	=	0.00 lb
	-	0.00 lb	x	1.30	=	0.00 lb	x	0.70	=	0.00 lb
	-	0.00 lb	x	1.30	=	0.00 lb	x	0.70	=	0.00 lb
	-	0.00 lb	x	1.30	=	0.00 lb	x	0.70	=	0.00 lb
	-	0.00 lb	x	1.30	=	0.00 lb	x	0.70	=	0.00 lb
	-	0.00 lb	x	1.30	=	0.00 lb	x	0.70	=	0.00 lb
	-	0.00 lb	x	1.30	=	0.00 lb	x	0.70	=	0.00 lb
	-	0.00 lb	x	1.30	=	0.00 lb	x	0.70	=	0.00 lb
	-	0.00 lb	x	1.30	=	0.00 lb	x	0.70	=	0.00 lb
	-	0.00 lb	x	1.30	=	0.00 lb	x	0.70	=	0.00 lb
	-	0.00 lb	x	1.30	=	0.00 lb	x	0.70	=	0.00 lb
	-	0.00 lb	x	1.30	=	0.00 lb	x	0.70	=	0.00 lb
	-	0.00 lb	x	1.30	=	0.00 lb	x	0.70	=	0.00 lb
ROOF	1	3171.09 lb	x	1.30	=	4122.42 lb	x	0.70	=	2885.70 lb
	2	3171.09 lb	x	1.30	=	4122.42 lb	x	0.70	=	2885.70 lb
	3	2364.83 lb	x	1.30	=	3074.28 lb	x	0.70	=	2151.99 lb
	4	3572.90 lb	x	1.30	=	4644.77 lb	x	0.70	=	3251.34 lb
	-	0.00 lb	x	1.30	=	0.00 lb	x	0.70	=	0.00 lb
	-	0.00 lb	x	1.30	=	0.00 lb	x	0.70	=	0.00 lb
	-	0.00 lb	x	1.30	=	0.00 lb	x	0.70	=	0.00 lb
	-	0.00 lb	x	1.30	=	0.00 lb	x	0.70	=	0.00 lb
	-	0.00 lb	x	1.30	=	0.00 lb	x	0.70	=	0.00 lb
	-	0.00 lb	x	1.30	=	0.00 lb	x	0.70	=	0.00 lb
	-	0.00 lb	x	1.30	=	0.00 lb	x	0.70	=	0.00 lb
	-	0.00 lb	x	1.30	=	0.00 lb	x	0.70	=	0.00 lb
	-	0.00 lb	x	1.30	=	0.00 lb	x	0.70	=	0.00 lb
	-	0.00 lb	x	1.30	=	0.00 lb	x	0.70	=	0.00 lb
	-	0.00 lb	x	1.30	=	0.00 lb	x	0.70	=	0.00 lb
	-	0.00 lb	x	1.30	=	0.00 lb	x	0.70	=	0.00 lb
	-	0.00 lb	x	1.30	=	0.00 lb	x	0.70	=	0.00 lb
2ND FLOOR	5	3681.31 lb	x	1.30	=	4785.70 lb	x	0.70	=	3349.99 lb
	6	3681.31 lb	x	1.30	=	4785.70 lb	x	0.70	=	3349.99 lb
	7	2852.67 lb	x	1.30	=	3708.48 lb	x	0.70	=	2595.93 lb
	8	4117.71 lb	x	1.30	=	5353.03 lb	x	0.70	=	3747.12 lb
	-	0.00 lb	x	1.30	=	0.00 lb	x	0.70	=	0.00 lb
	-	0.00 lb	x	1.30	=	0.00 lb	x	0.70	=	0.00 lb
	-	0.00 lb	x	1.30	=	0.00 lb	x	0.70	=	0.00 lb
	-	0.00 lb	x	1.30	=	0.00 lb	x	0.70	=	0.00 lb
	-	0.00 lb	x	1.30	=	0.00 lb	x	0.70	=	0.00 lb
	-	0.00 lb	x	1.30	=	0.00 lb	x	0.70	=	0.00 lb
	-	0.00 lb	x	1.30	=	0.00 lb	x	0.70	=	0.00 lb
	-	0.00 lb	x	1.30	=	0.00 lb	x	0.70	=	0.00 lb
	-	0.00 lb	x	1.30	=	0.00 lb	x	0.70	=	0.00 lb
	-	0.00 lb	x	1.30	=	0.00 lb	x	0.70	=	0.00 lb
	-	0.00 lb	x	1.30	=	0.00 lb	x	0.70	=	0.00 lb
	-	0.00 lb	x	1.30	=	0.00 lb	x	0.70	=	0.00 lb
	-	0.00 lb	x	1.30	=	0.00 lb	x	0.70	=	0.00 lb
	-	0.00 lb	x	1.30	=	0.00 lb	x	0.70	=	0.00 lb
	-	0.00 lb	x	1.30	=	0.00 lb	x	0.70	=	0.00 lb
	-	0.00 lb	x	1.30	=	0.00 lb	x	0.70	=	0.00 lb
	-	0.00 lb	x	1.30	=	0.00 lb	x	0.70	=	0.00 lb
	-	0.00 lb	x	1.30	=	0.00 lb	x	0.70	=	0.00 lb
	-	0.00 lb	x	1.30	=	0.00 lb	x	0.70	=	0.00 lb

WIND LOAD DESIGN:

2016CBC / ASCE 7-10
1609.6.4 DIRECTIONAL PROCEDURE - MWFRS
ENCLOSED BUILDING — *ASCE 7-10 27.4.1*

26.5-1A BASIC WIND SPEEDS FOR RISK CATEGORY II BUILDINGS

1	BASIC WIND SPEED	V	=	115.00 MPH		*ASCE 7-10 FIG 26.5-1*
	WIND DIRECTIONALLY FACTOR	Kd	=	0.85		*ASCE 7-10 TABLE 26.6-1*
2	IMPORTANCE FACTOR, CATEGORY II	I	=	1.00		*ASCE 7-10 TABLE 6-1*

BUILDING DIRECTION - X

3	EXPOSURE CATEGORY		C			*ASCE 7-10 26.7.3*
			CASE 1			*ASCE 7-10 TABLE 6-3*
	HEIGHT ABOVE GROUND LEVEL	z	= 20.00 ft			MEAN ROOF HEIGHT
	TERRAIN EXPOSURE CONSTRANT	α	= 9.50			*ASCE 7-10 TABLE 26.9-1*
	TERRAIN EXPOSURE CONSTRANT	zg	= 900.00 ft			*ASCE 7-10 TABLE 26.9-1*
	VELOCITY PRESSURE	Kz	= 0.90			*ASCE 7-10 TABLE 27.3-1*
4	TOPOGRAPHY FACTOR	Kzt	= 1.000	-		*ASCE 7-10 26.8.2*
5	VELOCITY PRESSURE	qz	= .00256 Kz Kzt Kd V^2 I			*ASCE 7-10 (27.3-1)*
		qz	= 25.954 psf			PRESSURE AT MEAN ROOF HEIGHT
6	GUST FACTOR	G	= 0.85			*ASCE 7-10 26.9.1*
7	ENCLOSURE CLASSIFICATION		ENCLOSED			*ASCE 7-10 26.10*
8	INTERNAL PRESSURE	GCpi	= 0.18 + / -			*ASCE 7-10 TABLE 26.11-1*
9	EXTERNAL PRESSURE COEFFICIENTS	L	= 24.00			*ASCE 7-10 FIG 27.4.1*
		B	= 24.00			*ASCE 7-10 FIG 27.4.1*
		L/B	= 1.000			*ASCE 7-10 FIG 27.4.1*
		h/L	= 0.833			*ASCE 7-10 FIG 27.4.1*
		Cp 1	= 0.800	WINDWARD WALL		*ASCE 7-10 FIG 27.4.1*
		Cp 2	= -0.500	LEEWARD WALL		*ASCE 7-10 FIG 27.4.1*
		Cp 3	= -0.700	SIDE WALLS		*ASCE 7-10 FIG 27.4.1*
	PARALLEL TO RIDGE	Cp 4	= -0.900	ROOF 1	0.00 deg	*ASCE 7-10 FIG 27.4.1* PITCH 0.00 :12
		Cp 5	= -0.900	ROOF 2	0.00 deg	PITCH 0.00 :12
10	DESIGN WIND LOAD	p	= qGCp - qi (Gcpi)			*ASCE 7-10 TABLE 26.11-1*
	WINDWARD q = qz & qi = qh	p	= 17.649 -	-4.672 =	22.321 psf	> LATERAL FORCE
	LEEWARD q = qh	p	= -11.030 -	4.672 =	-15.702 psf	> P WIND 38.02 psf
	SIDE WALLS qi = qh	p	= -15.443 -	4.672 =	-20.114 psf	
	ROOF 1 qi = qh	p	= -19.855 +	-4.672 =	-24.527 psf	> WIND -24.53 psf
	ROOF 2 qi = qh	p	= -19.855 +	-4.672 =	-24.527 psf	> LEE -24.53 psf
	DESIGN WIND LOAD x DIRECTION	p WALL	= 22.32 -	-15.70 =	38.02 psf	UPLIFT FORCE
		p ROOF	0.00 -	0.00 =	0.00 psf	

BUILDING DIRECTION - Y

3	EXPOSURE CATEGORY		C			*ASCE 7-10 26.7.3*
			CASE 1			*ASCE 7-10 TABLE 6-3*
	HEIGHT ABOVE GROUND LEVEL	z	= 20.00 ft			MEAN ROOF HEIGHT
	TERRAIN EXPOSURE CONSTRANT	α	= 9.50			*ASCE 7-10 TABLE 26.9-1*
	TERRAIN EXPOSURE CONSTRANT	zg	= 900.00 ft			*ASCE 7-10 TABLE 26.9-1*
	VELOCITY PRESSURE	Kz	= 0.90			*ASCE 7-10 TABLE 27.3-1*
4	TOPOGRAPHY FACTOR	Kzt	= 1.000	-		*ASCE 7-10 26.8.2*
5	VELOCITY PRESSURE	qz	= .00256 Kz Kzt Kd V^2 I			*ASCE 7-10 (27.3-1)*
		qz	= 25.954 psf			PRESSURE AT MEAN ROOF HEIGHT
6	GUST FACTOR	G	= 0.85			*ASCE 7-10 26.9.1*
7	ENCLOSURE CLASSIFICATION		ENCLOSED			*ASCE 7-10 26.10*
8	INTERNAL PRESSURE	GCpi	= 0.18 + / -			*ASCE 7-10 TABLE 26.11-1*
9	EXTERNAL PRESSURE COEFFICIENTS	L	= 24.00			*ASCE 7-10 FIG 27.4.1*
		B	= 24.00			*ASCE 7-10 FIG 27.4.1*
		L/B	= 1.000			*ASCE 7-10 FIG 27.4.1*
		h/L	= 0.833			*ASCE 7-10 FIG 27.4.1*
		Cp 1	= 0.800	WINDWARD WALL		*ASCE 7-10 FIG 27.4.1*
		Cp 2	= -0.500	LEEWARD WALL		*ASCE 7-10 FIG 27.4.1*
		Cp 3	= -0.700	SIDE WALLS		*ASCE 7-10 FIG 27.4.1*
	NORMAL TO RIDGE (> 10 deg)	Cp 4	= -0.900	ROOF 1	0.00 deg	*ASCE 7-10 FIG 27.4.1* PITCH 0.00 :12
		Cp 4	= -0.900	ROOF 2	0.00 deg	PITCH 0.00 :12
10	DESIGN WIND LOAD	p	= qGCp - qi (Gcpi)			*ASCE 7-10 TABLE 26.11-1*
	WINDWARD q = qz & qi = qh	p	= 17.649 -	-4.672 =	22.321 psf	> LATERAL FORCE
	LEEWARD q = qh	p	= -11.030 -	4.672 =	-15.702 psf	> P WIND 38.02 psf
	SIDE WALLS qi = qh	p	= -15.443 -	4.672 =	-20.114 psf	
	ROOF 1 qi = qh	p	= -19.855 +	-4.672 =	-24.527 psf	> WIND -24.53 psf
	ROOF 2 qi = qh	p	= -19.855 +	-4.672 =	-24.527 psf	> LEE -24.53 psf
	DESIGN WIND LOAD y DIRECTION	P WALL	= 22.32 -	-15.70 =	38.02 psf	UPLIFT FORCE
		P ROOF	0.00 -	0.00 =	0.00 psf	

RICHMOND HOFFMAYER INC.
STRUCTURAL ENGINEERING

DATE 6/27/2017
SHEET _____

WIND FORCES:

	P#		WIND FORCE WALL		TRIB. HEIGHT		WIND FORCE ROOF					TRIB. HT.		LEE FORCE ROOF					TRIB. HT.		V WIND (STRENGTH)
- = 0.00ft	-	-	0.00 psf	x	0.00	+ (	0.00 psf	x	SIN	0.00	x	0.00	ft -	0.00 psf	x	SIN	0.00	x	0.00	ft) =	0.00 plf
	-	-	0.00 psf	x	0.00	+ (	0.00 psf	x	SIN	0.00	x	0.00	ft -	0.00 psf	x	SIN	0.00	x	0.00	ft) =	0.00 plf
	-	-	0.00 psf	x	0.00	+ (	0.00 psf	x	SIN	0.00	x	0.00	ft -	0.00 psf	x	SIN	0.00	x	0.00	ft) =	0.00 plf
	-	-	0.00 psf	x	0.00	+ (	0.00 psf	x	SIN	0.00	x	0.00	ft -	0.00 psf	x	SIN	0.00	x	0.00	ft) =	0.00 plf
	-	-	0.00 psf	x	0.00	+ (	0.00 psf	x	SIN	0.00	x	0.00	ft -	0.00 psf	x	SIN	0.00	x	0.00	ft) =	0.00 plf
	-	-	0.00 psf	x	0.00	+ (	0.00 psf	x	SIN	0.00	x	0.00	ft -	0.00 psf	x	SIN	0.00	x	0.00	ft) =	0.00 plf
	-	-	0.00 psf	x	0.00	+ (	0.00 psf	x	SIN	0.00	x	0.00	ft -	0.00 psf	x	SIN	0.00	x	0.00	ft) =	0.00 plf
	-	-	0.00 psf	x	0.00	+ (	0.00 psf	x	SIN	0.00	x	0.00	ft -	0.00 psf	x	SIN	0.00	x	0.00	ft) =	0.00 plf
	-	-	0.00 psf	x	0.00	+ (	0.00 psf	x	SIN	0.00	x	0.00	ft -	0.00 psf	x	SIN	0.00	x	0.00	ft) =	0.00 plf
	-	-	0.00 psf	x	0.00	+ (	0.00 psf	x	SIN	0.00	x	0.00	ft -	0.00 psf	x	SIN	0.00	x	0.00	ft) =	0.00 plf
	-	-	0.00 psf	x	0.00	+ (	0.00 psf	x	SIN	0.00	x	0.00	ft -	0.00 psf	x	SIN	0.00	x	0.00	ft) =	0.00 plf
	-	-	0.00 psf	x	0.00	+ (	0.00 psf	x	SIN	0.00	x	0.00	ft -	0.00 psf	x	SIN	0.00	x	0.00	ft) =	0.00 plf
	-	-	0.00 psf	x	0.00	+ (	0.00 psf	x	SIN	0.00	x	0.00	ft -	0.00 psf	x	SIN	0.00	x	0.00	ft) =	0.00 plf
	-	-	0.00 psf	x	0.00	+ (	0.00 psf	x	SIN	0.00	x	0.00	ft -	0.00 psf	x	SIN	0.00	x	0.00	ft) =	0.00 plf
- = 0.00ft	-	-	0.00 psf	x	0.00	+ (	0.00 psf	x	SIN	0.00	x	0.00	ft -	0.00 psf	x	SIN	0.00	x	0.00	ft) =	0.00 plf
	-	-	0.00 psf	x	0.00	+ (	0.00 psf	x	SIN	0.00	x	0.00	ft -	0.00 psf	x	SIN	0.00	x	0.00	ft) =	0.00 plf
	-	-	0.00 psf	x	0.00	+ (	0.00 psf	x	SIN	0.00	x	0.00	ft -	0.00 psf	x	SIN	0.00	x	0.00	ft) =	0.00 plf
	-	-	0.00 psf	x	0.00	+ (	0.00 psf	x	SIN	0.00	x	0.00	ft -	0.00 psf	x	SIN	0.00	x	0.00	ft) =	0.00 plf
	-	-	0.00 psf	x	0.00	+ (	0.00 psf	x	SIN	0.00	x	0.00	ft -	0.00 psf	x	SIN	0.00	x	0.00	ft) =	0.00 plf
	-	-	0.00 psf	x	0.00	+ (	0.00 psf	x	SIN	0.00	x	0.00	ft -	0.00 psf	x	SIN	0.00	x	0.00	ft) =	0.00 plf
	-	-	0.00 psf	x	0.00	+ (	0.00 psf	x	SIN	0.00	x	0.00	ft -	0.00 psf	x	SIN	0.00	x	0.00	ft) =	0.00 plf
	-	-	0.00 psf	x	0.00	+ (	0.00 psf	x	SIN	0.00	x	0.00	ft -	0.00 psf	x	SIN	0.00	x	0.00	ft) =	0.00 plf
	-	-	0.00 psf	x	0.00	+ (	0.00 psf	x	SIN	0.00	x	0.00	ft -	0.00 psf	x	SIN	0.00	x	0.00	ft) =	0.00 plf
	-	-	0.00 psf	x	0.00	+ (	0.00 psf	x	SIN	0.00	x	0.00	ft -	0.00 psf	x	SIN	0.00	x	0.00	ft) =	0.00 plf
	-	-	0.00 psf	x	0.00	+ (	0.00 psf	x	SIN	0.00	x	0.00	ft -	0.00 psf	x	SIN	0.00	x	0.00	ft) =	0.00 plf
	-	-	0.00 psf	x	0.00	+ (	0.00 psf	x	SIN	0.00	x	0.00	ft -	0.00 psf	x	SIN	0.00	x	0.00	ft) =	0.00 plf
	-	-	0.00 psf	x	0.00	+ (	0.00 psf	x	SIN	0.00	x	0.00	ft -	0.00 psf	x	SIN	0.00	x	0.00	ft) =	0.00 plf
	-	-	0.00 psf	x	0.00	+ (	0.00 psf	x	SIN	0.00	x	0.00	ft -	0.00 psf	x	SIN	0.00	x	0.00	ft) =	0.00 plf
	-	-	0.00 psf	x	0.00	+ (	0.00 psf	x	SIN	0.00	x	0.00	ft -	0.00 psf	x	SIN	0.00	x	0.00	ft) =	0.00 plf
ROOF = 10.00ft	1	2X	38.02 psf	x	5.00	+ (	-24.53 psf	x	SIN	0.00	x	0.00	ft -	-24.53 psf	x	SIN	0.00	x	0.00	ft) =	190.11 plf
	2	2Y	38.02 psf	x	5.00	+ (	-24.53 psf	x	SIN	0.00	x	0.00	ft -	-24.53 psf	x	SIN	0.00	x	0.00	ft) =	190.11 plf
	-	-	0.00 psf	x	0.00	+ (	0.00 psf	x	SIN	0.00	x	0.00	ft -	0.00 psf	x	SIN	0.00	x	0.00	ft) =	0.00 plf
	-	-	0.00 psf	x	0.00	+ (	0.00 psf	x	SIN	0.00	x	0.00	ft -	0.00 psf	x	SIN	0.00	x	0.00	ft) =	0.00 plf
	-	-	0.00 psf	x	0.00	+ (	0.00 psf	x	SIN	0.00	x	0.00	ft -	0.00 psf	x	SIN	0.00	x	0.00	ft) =	0.00 plf
	-	-	0.00 psf	x	0.00	+ (	0.00 psf	x	SIN	0.00	x	0.00	ft -	0.00 psf	x	SIN	0.00	x	0.00	ft) =	0.00 plf
	-	-	0.00 psf	x	0.00	+ (	0.00 psf	x	SIN	0.00	x	0.00	ft -	0.00 psf	x	SIN	0.00	x	0.00	ft) =	0.00 plf
	-	-	0.00 psf	x	0.00	+ (	0.00 psf	x	SIN	0.00	x	0.00	ft -	0.00 psf	x	SIN	0.00	x	0.00	ft) =	0.00 plf
	-	-	0.00 psf	x	0.00	+ (	0.00 psf	x	SIN	0.00	x	0.00	ft -	0.00 psf	x	SIN	0.00	x	0.00	ft) =	0.00 plf
	-	-	0.00 psf	x	0.00	+ (	0.00 psf	x	SIN	0.00	x	0.00	ft -	0.00 psf	x	SIN	0.00	x	0.00	ft) =	0.00 plf
	-	-	0.00 psf	x	0.00	+ (	0.00 psf	x	SIN	0.00	x	0.00	ft -	0.00 psf	x	SIN	0.00	x	0.00	ft) =	0.00 plf
	-	-	0.00 psf	x	0.00	+ (	0.00 psf	x	SIN	0.00	x	0.00	ft -	0.00 psf	x	SIN	0.00	x	0.00	ft) =	0.00 plf
	-	-	0.00 psf	x	0.00	+ (	0.00 psf	x	SIN	0.00	x	0.00	ft -	0.00 psf	x	SIN	0.00	x	0.00	ft) =	0.00 plf
	-	-	0.00 psf	x	0.00	+ (	0.00 psf	x	SIN	0.00	x	0.00	ft -	0.00 psf	x	SIN	0.00	x	0.00	ft) =	0.00 plf
2ND FLOOR = 10.00ft	3	1X	38.02 psf	x	10.00	+ (	-24.53 psf	x	SIN	0.00	x	0.00	ft -	-24.53 psf	x	SIN	0.00	x	0.00	ft) =	380.23 plf
	4	1Y	38.02 psf	x	10.00	+ (	-24.53 psf	x	SIN	0.00	x	0.00	ft -	-24.53 psf	x	SIN	0.00	x	0.00	ft) =	380.23 plf
	5	1Y	38.02 psf	x	10.00	+ (	-24.53 psf	x	SIN	0.00	x	0.00	ft -	-24.53 psf	x	SIN	0.00	x	0.00	ft) =	380.23 plf
	-	-	0.00 psf	x	0.00	+ (	0.00 psf	x	SIN	0.00	x	0.00	ft -	0.00 psf	x	SIN	0.00	x	7.00	ft) =	0.00 plf
	-	-	0.00 psf	x	0.00	+ (	0.00 psf	x	SIN	0.00	x	0.00	ft -	0.00 psf	x	SIN	0.00	x	7.00	ft) =	0.00 plf
	-	-	0.00 psf	x	0.00	+ (	0.00 psf	x	SIN	0.00	x	0.00	ft -	0.00 psf	x	SIN	0.00	x	0.00	ft) =	0.00 plf
	-	-	0.00 psf	x	0.00	+ (	0.00 psf	x	SIN	0.00	x	0.00	ft -	0.00 psf	x	SIN	0.00	x	0.00	ft) =	0.00 plf
	-	-	0.00 psf	x	0.00	+ (	0.00 psf	x	SIN	0.00	x	0.00	ft -	0.00 psf	x	SIN	0.00	x	0.00	ft) =	0.00 plf
	-	-	0.00 psf	x	0.00	+ (	0.00 psf	x	SIN	0.00	x	0.00	ft -	0.00 psf	x	SIN	0.00	x	0.00	ft) =	0.00 plf
	-	-	0.00 psf	x	0.00	+ (	0.00 psf	x	SIN	0.00	x	0.00	ft -	0.00 psf	x	SIN	0.00	x	0.00	ft) =	0.00 plf
	-	-	0.00 psf	x	0.00	+ (	0.00 psf	x	SIN	0.00	x	0.00	ft -	0.00 psf	x	SIN	0.00	x	0.00	ft) =	0.00 plf
	-	-	0.00 psf	x	0.00	+ (	0.00 psf	x	SIN	0.00	x	0.00	ft -	0.00 psf	x	SIN	0.00	x	0.00	ft) =	0.00 plf
	-	-	0.00 psf	x	0.00	+ (	0.00 psf	x	SIN	0.00	x	0.00	ft -	0.00 psf	x	SIN	0.00	x	0.00	ft) =	0.00 plf
	-	-	0.00 psf	x	0.00	+ (	0.00 psf	x	SIN	0.00	x	0.00	ft -	0.00 psf	x	SIN	0.00	x	0.00	ft) =	0.00 plf

4425 CANOGA AVENUE WOODLAND HILLS CA 91364
PHONE (818) 347-7008 FAX (818) 883-8869

WIND FORCES TO SHEAR LINES:

2ND LEVEL ROOF

SHEAR LINE FORCES

LINE	F#			FORCE		WIDTH		X BAR		L		FACTORS			% LOAD EFFECT			
1	F1	-	(	190.11 plf	) x	24.00	x	1.00	/	2.00	x	1.00	/ 1.00	x	1.00	/	1.00	= 2281.36 lb
+	-	-	(		) x	0.00	x	0.00	/	0.00	x	1.00	/ 1.00	x	1.00	/	1.00	= 0.00 lb
+	-	-	(		) x	0.00	x	0.00	/	0.00	x	1.00	/ 1.00	x	1.00	/	1.00	= 0.00 lb
+	-	-	(		) x	0.00	x	0.00	/	0.00	x	1.00	/ 1.00	x	1.00	/	1.00	= 0.00 lb
+	-	-	(		) x	0.00	x	0.00	/	0.00	x	1.00	/ 1.00	x	1.00	/	1.00	= 0.00 lb
+	-	-	(		) x	0.00	x	0.00	/	0.00	x	1.00	/ 1.00	x	1.00	/	1.00	= 0.00 lb
+	-			(	) x			0.00	/	0.00	x	1.00	/ 1.00	x	1.00	/	1.00	= 0.00 lb
																		2281.36 lb

SHEAR LINE FORCES

LINE	F#			FORCE		WIDTH		X BAR		L		FACTORS			% LOAD EFFECT			
2	F1	-	(	190.11 plf	) x	24.00	x	1.00	/	2.00	x	1.00	/ 1.00	x	1.00	/	1.00	= 2281.36 lb
+	-	-	(		) x	0.00	x	0.00	/	0.00	x	1.00	/ 1.00	x	1.00	/	1.00	= 0.00 lb
+	-	-	(		) x	0.00	x	0.00	/	0.00	x	1.00	/ 1.00	x	1.00	/	1.00	= 0.00 lb
+	-	-	(		) x	0.00	x	0.00	/	0.00	x	1.00	/ 1.00	x	1.00	/	1.00	= 0.00 lb
+	-	-	(		) x	0.00	x	0.00	/	0.00	x	1.00	/ 1.00	x	1.00	/	1.00	= 0.00 lb
+	-	-	(		) x	0.00	x	0.00	/	0.00	x	1.00	/ 1.00	x	1.00	/	1.00	= 0.00 lb
+	-			(	) x			0.00	/	0.00	x	1.00	/ 1.00	x	1.00	/	1.00	= 0.00 lb
																		2281.36 lb

SHEAR LINE FORCES

LINE	F#			FORCE		WIDTH		X BAR		L		FACTORS			% LOAD EFFECT			
3	F2	-	(	190.11 plf	) x	24.00	x	1.00	/	2.00	x	1.00	/ 1.00	x	1.00	/	1.00	= 2281.36 lb
+	-	-	(		) x	0.00	x	0.00	/	0.00	x	1.00	/ 1.00	x	1.00	/	1.00	= 0.00 lb
+	-	-	(		) x	0.00	x	0.00	/	0.00	x	1.00	/ 1.00	x	1.00	/	1.00	= 0.00 lb
+	-	-	(		) x	0.00	x	0.00	/	0.00	x	1.00	/ 1.00	x	1.00	/	1.00	= 0.00 lb
+	-	-	(		) x	0.00	x	0.00	/	0.00	x	1.00	/ 1.00	x	1.00	/	1.00	= 0.00 lb
+	-	-	(		) x	0.00	x	0.00	/	0.00	x	1.00	/ 1.00	x	1.00	/	1.00	= 0.00 lb
+	-			(	) x			0.00	/	0.00	x	1.00	/ 1.00	x	1.00	/	1.00	= 0.00 lb
																		2281.36 lb

SHEAR LINE FORCES

LINE	F#			FORCE		WIDTH		X BAR		L		FACTORS			% LOAD EFFECT			
4	F2	-	(	190.11 plf	) x	24.00	x	1.00	/	2.00	x	1.00	/ 1.00	x	1.00	/	1.00	= 2281.36 lb
+	F2	-	(	190.11 plf	) x	5.50	x	26.75	/	24.00	x	1.00	/ 1.00	x	1.00	/	1.00	= 1165.44 lb
+	-	-	(		) x	0.00	x	0.00	/	0.00	x	1.00	/ 1.00	x	1.00	/	1.00	= 0.00 lb
+	-	-	(		) x	0.00	x	0.00	/	0.00	x	1.00	/ 1.00	x	1.00	/	1.00	= 0.00 lb
+	-	-	(		) x	0.00	x	0.00	/	0.00	x	1.00	/ 1.00	x	1.00	/	1.00	= 0.00 lb
+	-	-	(		) x	0.00	x	0.00	/	0.00	x	1.00	/ 1.00	x	1.00	/	1.00	= 0.00 lb
+	-			(	) x			0.00	/	0.00	x	1.00	/ 1.00	x	1.00	/	1.00	= 0.00 lb
																		3446.80 lb

SHEAR LINE FORCES

LINE	F#			FORCE		WIDTH		X BAR		L		FACTORS			% LOAD EFFECT			
-	-	-	(		) x	0.00	x	0.00	/	0.00	x	1.00	/ 1.00	x	1.00	/	1.00	= 0.00 lb
+	-	-	(		) x	0.00	x	0.00	/	0.00	x	1.00	/ 1.00	x	1.00	/	1.00	= 0.00 lb
+	-	-	(		) x	0.00	x	0.00	/	0.00	x	1.00	/ 1.00	x	1.00	/	1.00	= 0.00 lb
+	-	-	(		) x	0.00	x	0.00	/	0.00	x	1.00	/ 1.00	x	1.00	/	1.00	= 0.00 lb
+	-	-	(		) x	0.00	x	0.00	/	0.00	x	1.00	/ 1.00	x	1.00	/	1.00	= 0.00 lb
+	-	-	(		) x	0.00	x	0.00	/	0.00	x	1.00	/ 1.00	x	1.00	/	1.00	= 0.00 lb
+	-			(	) x			0.00	/	0.00	x	1.00	/ 1.00	x	1.00	/	1.00	= 0.00 lb
																		0.00 lb

WIND FORCES TO SHEAR LINES:

1ST LEVEL 2ND FLOOR

SHEAR LINE FORCES

LINE		F#			FORCE		WIDTH		X BAR		L		FACTORS			% LOAD EFFECT			
5		F3	-	(	380.23 plf	) x	24.00	x	1.00	/	2.00	x	1.00	/ 1.00	x	1.00	/ 1.00	=	4562.73 lb
	+	-	F1	(	2281.36 lb	) x	1.00	x	1.00	/	1.00	x	1.00	/ 1.00	x	1.00	/ 1.00	=	2281.36 lb
	+	-	-	(		) x	0.00	x	0.00	/	0.00	x	1.00	/ 1.00	x	1.00	/ 1.00	=	0.00 lb
	+	-	-	(		) x	0.00	x	0.00	/	0.00	x	1.00	/ 1.00	x	1.00	/ 1.00	=	0.00 lb
	+	-	-	(		) x	0.00	x	0.00	/	0.00	x	1.00	/ 1.00	x	1.00	/ 1.00	=	0.00 lb
	+	-	-	(		) x	0.00	x	0.00	/	0.00	x	1.00	/ 1.00	x	1.00	/ 1.00	=	0.00 lb
	+	-			(	) x			0.00	/	0.00	x	1.00	/ 1.00	x	1.00	/ 1.00	=	0.00 lb
																			6844.09 lb

SHEAR LINE FORCES

LINE		F#			FORCE		WIDTH		X BAR		L		FACTORS			% LOAD EFFECT			
6		F3	-	(	380.23 plf	) x	24.00	x	1.00	/	2.00	x	1.00	/ 1.00	x	1.00	/ 1.00	=	4562.73 lb
	+	-	F2	(	2281.36 lb	) x	1.00	x	1.00	/	1.00	x	1.00	/ 1.00	x	1.00	/ 1.00	=	2281.36 lb
	+	-	-	(		) x	0.00	x	0.00	/	0.00	x	1.00	/ 1.00	x	1.00	/ 1.00	=	0.00 lb
	+	-	-	(		) x	0.00	x	0.00	/	0.00	x	1.00	/ 1.00	x	1.00	/ 1.00	=	0.00 lb
	+	-	-	(		) x	0.00	x	0.00	/	0.00	x	1.00	/ 1.00	x	1.00	/ 1.00	=	0.00 lb
	+	-	-	(		) x	0.00	x	0.00	/	0.00	x	1.00	/ 1.00	x	1.00	/ 1.00	=	0.00 lb
	+	-			(	) x			0.00	/	0.00	x	1.00	/ 1.00	x	1.00	/ 1.00	=	0.00 lb
																			6844.09 lb

SHEAR LINE FORCES

LINE		F#			FORCE		WIDTH		X BAR		L		FACTORS			% LOAD EFFECT			
7		F4	-	(	380.23 plf	) x	24.00	x	1.00	/	2.00	x	1.00	/ 1.00	x	1.00	/ 1.00	=	4562.73 lb
	+	-	F3	(	2281.36 lb	) x	1.00	x	1.00	/	1.00	x	1.00	/ 1.00	x	1.00	/ 1.00	=	2281.36 lb
	+	-	-	(		) x	0.00	x	0.00	/	0.00	x	1.00	/ 1.00	x	1.00	/ 1.00	=	0.00 lb
	+	-	-	(		) x	0.00	x	0.00	/	0.00	x	1.00	/ 1.00	x	1.00	/ 1.00	=	0.00 lb
	+	-	-	(		) x	0.00	x	0.00	/	0.00	x	1.00	/ 1.00	x	1.00	/ 1.00	=	0.00 lb
	+	-	-	(		) x	0.00	x	0.00	/	0.00	x	1.00	/ 1.00	x	1.00	/ 1.00	=	0.00 lb
	+	-			(	) x			0.00	/	0.00	x	1.00	/ 1.00	x	1.00	/ 1.00	=	0.00 lb
																			6844.09 lb

SHEAR LINE FORCES

LINE		F#			FORCE		WIDTH		X BAR		L		FACTORS			% LOAD EFFECT			
8		F4	-	(	380.23 plf	) x	24.00	x	1.00	/	2.00	x	1.00	/ 1.00	x	1.00	/ 1.00	=	4562.73 lb
	+	F5	-	(	380.23 plf	) x	5.50	x	26.75	/	24.00	x	1.00	/ 1.00	x	1.00	/ 1.00	=	2330.87 lb
	+	-	F4	(	3446.80 lb	) x	1.00	x	1.00	/	1.00	x	1.00	/ 1.00	x	1.00	/ 1.00	=	3446.80 lb
	+	-	-	(		) x	0.00	x	0.00	/	0.00	x	1.00	/ 1.00	x	1.00	/ 1.00	=	0.00 lb
	+	-	-	(		) x	0.00	x	0.00	/	0.00	x	1.00	/ 1.00	x	1.00	/ 1.00	=	0.00 lb
	+	-	-	(		) x	0.00	x	0.00	/	0.00	x	1.00	/ 1.00	x	1.00	/ 1.00	=	0.00 lb
	+	-			(	) x			0.00	/	0.00	x	1.00	/ 1.00	x	1.00	/ 1.00	=	0.00 lb
																			10340.41 lb

SHEAR LINE FORCES

LINE		F#			FORCE		WIDTH		X BAR		L		FACTORS			% LOAD EFFECT			
-		-	-	(		) x	0.00	x	0.00	/	0.00	x	1.00	/ 1.00	x	1.00	/ 1.00	=	0.00 lb
	+	-	-	(		) x	0.00	x	0.00	/	0.00	x	1.00	/ 1.00	x	1.00	/ 1.00	=	0.00 lb
	+	-	-	(		) x	0.00	x	0.00	/	0.00	x	1.00	/ 1.00	x	1.00	/ 1.00	=	0.00 lb
	+	-	-	(		) x	0.00	x	0.00	/	0.00	x	1.00	/ 1.00	x	1.00	/ 1.00	=	0.00 lb
	+	-	-	(		) x	0.00	x	0.00	/	0.00	x	1.00	/ 1.00	x	1.00	/ 1.00	=	0.00 lb
	+	-	-	(		) x	0.00	x	0.00	/	0.00	x	1.00	/ 1.00	x	1.00	/ 1.00	=	0.00 lb
	+	-			(	) x			0.00	/	0.00	x	1.00	/ 1.00	x	1.00	/ 1.00	=	0.00 lb
																			0.00 lb

WIND FORCE SUMMARY:

ALLOWABLE STRESS DESIGN SHEAR FORCE SUMMARY:

	LINE		V WIND (STRENGTH)		ϕ		V WIND (ASD)
	-	=	0.00 lb	x	0.60	=	0.00 lb

12A

Table 10: Allowable In-Plane Shear Strength (Pounds per Foot) for SIP Shear Walls (Seismic Loads in Seismic Design Categories A, B, C, D, E and F)[1,2]

Spline Type[3]	Framing Minimum SG[4]	Minimum Facing Connections[2]			Shear Strengt h[5] (plf)
		Chord[2]	Plate[2]	Spline[3]	
Block, Surface, or Lumber Spline (Type S, Type L)	0.50	0.113"x 2-1/4" nails, 6" on center	0.113"x 2-1/4" nails, 3" on center	(7/16" thick, 3" wide spline) 0.113"x 2-1/4" nails, 6" on center	360
	0.50	0.113"x 2-1/4" nails, 6" on center	0.113"x 2-1/4" nails, 6" on center	(3/4" thick, 3" wide spline) 0.113"x 2-1/4" nails, 6" on center	360
	0.50	0.113" x 2-3/8" nails, 3" on center Staggered (3/8" edge distance and 3/4" edge distance)	0.113" x 2-3/8" round head nails, 3" on center Staggered (3/8", 3/4" edge distance)	(23/32" thick, 3" wide spline) 0.113" x 2-3/8" nails, 3" on center Staggered (3/8" edge distance and 3/4" edge distance)	720
	0.50	0.113" x 2-3/8" nails, 2" on center Staggered (3/8" edge distance and 3/4" edge distance)	0.113" x 2-3/8" round head nails, 2" on center Staggered (3/8", 3/4" edge distance)	(23/32" thick, 3" wide spline) 0.113" x 2-3/8" nails, 2" on center Staggered (3/8" edge distance and 3/4" edge distance)	920

[1] Shear strength values, as published in this table, are limited to assemblies resisting wind or seismic forces where the aspect ratio (height:width) does not exceed 1:1 for Type S panel connections or 2:1 for Type L panel connections. (IM 014 ACU17)
[2] Chords, hold-downs and connections to other structural elements must be designed by a registered design professional in accordance with accepted engineering practice.
[3] Spline type at interior panel-to-panel joints only, solid chord members are required at each end of each shear wall segment.
[4] Required connections must be made on each side of the panel. Dimensional or engineered lumber shall have an equivalent specific gravity not less than specified.
[5] For design to resist seismic forces, shear wall height-width ratios greater than 2:1, but not exceeding 3.5:1, are permitted for assemblies using lumber splines provided the allowable shear strength values in this table are multiplied by 2w/h.

USE FOR DESIGN NEXT PAGE

SIP 6 = 6

SIP 3 = 3

SIP 2 = 2

This listing report is intended to indicate that NTA, Inc. has evaluated the product described and found it to be eligible for labeling. Product not labeled as specified herein is not covered by this report. NTA, Inc. makes no warranty, either expressed or implied, regarding the product covered by this report.

RICHMOND HOFFMAYER INC.
STRUCTURAL ENGINEERING

DATE 6/27/2017
SHEET _____

SEISMIC STRENGTH SHEAR FORCES TO SHEAR LINES AND ALLOWABLE STRESS SHEAR WALL FORCES:

ADJUST H/W < 3.5/1 USING 2w/h FOR CAPACITIES

LINE	V STRENGTH	A	B	C	D	E	F	G	H	LENGTH	v ASD = 0.7 V / L	TYPE	CAPACITY	H	W	H / W		2 W / H	ADJUSTED CAPACITY
1	4122.42 lb	6.00 ft +	5.00 ft +	4.00 ft +	ft +	ft +	ft +	ft +	ft =	15.00 ft	192.38 plf	SIP6	360.00	10.00	4.00	2.50	x	0.80	288.00
2	4122.42 lb	5.50 ft +	7.00 ft +	ft +	ft +	ft +	ft +	ft +	ft =	12.50 ft	230.86 plf	SIP6	360.00	10.00	5.50	1.82			360.00
3	3074.28 lb	7.00 ft +	ft +	ft +	ft +	ft +	ft +	ft +	ft =	7.00 ft	307.43 plf	SIP6	360.00	10.00	7.00	1.43			360.00
4	4644.77 lb	3.50 ft +	3.50 ft +	ft +	ft +	ft +	ft +	ft +	ft =	7.00 ft	464.48 plf	SIP2	920.00	10.00	3.50	2.86	x	0.70	644.00
5	4785.70 lb	13.50 ft +	ft +	ft +	ft +	ft +	ft +	ft +	ft =	13.50 ft	248.15 plf	SIP6	360.00	9.00	13.50	0.67			360.00
6	4785.70 lb	13.50 ft +	ft +	ft +	ft +	ft +	ft +	ft +	ft =	13.50 ft	248.15 plf	SIP6	360.00	9.00	13.50	0.67			360.00
7	3708.48 lb	24.00 ft +	ft +	ft +	ft +	ft +	ft +	ft +	ft =	24.00 ft	108.16 plf	SIP6	360.00	9.00	24.00	0.38			360.00
8	5353.03 lb	3.50 ft +	3.50 ft +	ft +	ft +	ft +	ft +	ft +	ft =	7.00 ft	535.30 plf	SIP2	920.00	9.00	3.50	2.57	x	0.78	715.56
	lb	ft +	ft +	ft +	ft +	ft +	ft +	ft +	ft =	ft	plf	-							
	lb	ft +	ft +	ft +	ft +	ft +	ft +	ft +	ft =	ft	plf	-							
	lb	ft +	ft +	ft +	ft +	ft +	ft +	ft +	ft =	ft	plf	-							
	lb	ft +	ft +	ft +	ft +	ft +	ft +	ft +	ft =	ft	plf	-							
	lb	ft +	ft +	ft +	ft +	ft +	ft +	ft +	ft =	ft	plf	-							
	lb	ft +	ft +	ft +	ft +	ft +	ft +	ft +	ft =	ft	plf	-							
	lb	ft +	ft +	ft +	ft +	ft +	ft +	ft +	ft =	ft	plf	-							
	lb	ft +	ft +	ft +	ft +	ft +	ft +	ft +	ft =	ft	plf	-							
	lb	ft +	ft +	ft +	ft +	ft +	ft +	ft +	ft =	ft	plf	-							
	lb	ft +	ft +	ft +	ft +	ft +	ft +	ft +	ft =	ft	plf	-							

125

4425 CANOGA AVENUE WOODLAND HILLS CA 91364
PHONE (818) 347-7008 FAX (818) 883-8869

WIND SHEAR FORCES TO SHEAR LINES AND ALLOWABLE STRESS SHEAR WALL FORCES:

ALLOW FOR H/W < 3.5/1 PER CBC TA 2305.3.4

LINE	V ASD	A	B	C	D	E	F	G	H	LENGTH	v ASD = V / L	TYPE	CAPACITY	H	W	H / W < 3.5	ADJUSTED CAPACITY
1	1368.82 lb	6.00 ft +	5.00 ft +	4.00 ft +	ft +	ft +	ft +	ft +	ft =	15.00 ft	91.25 plf	SIP6	360.00	10.00	4.00	2.50	360.00 plf
2	1368.82 lb	5.50 ft +	7.00 ft +	ft +	ft +	ft +	ft +	ft +	ft =	12.50 ft	109.51 plf	SIP6	360.00	10.00	5.50	1.82	360.00 plf
3	1368.82 lb	7.00 ft +	ft +	ft +	ft +	ft +	ft +	ft +	ft =	7.00 ft	195.55 plf	SIP6	360.00	10.00	7.00	1.43	360.00 plf
4	2068.08 lb	3.50 ft +	3.50 ft +	ft +	ft +	ft +	ft +	ft +	ft =	7.00 ft	295.44 plf	SIP2	920.00	10.00	3.50	2.86	920.00 plf
5	4106.46 lb	13.50 ft +	ft +	ft +	ft +	ft +	ft +	ft +	ft =	13.50 ft	304.18 plf	SIP6	360.00	9.00	13.50	0.67	360.00 plf
6	4106.46 lb	13.50 ft +	ft +	ft +	ft +	ft +	ft +	ft +	ft =	13.50 ft	304.18 plf	SIP6	360.00	9.00	13.50	0.67	360.00 plf
7	4106.46 lb	24.00 ft +	ft +	ft +	ft +	ft +	ft +	ft +	ft =	24.00 ft	171.10 plf	SIP6	360.00	9.00	24.00	0.38	360.00 plf
8	6204.24 lb	3.50 ft +	3.50 ft +	ft +	ft +	ft +	ft +	ft +	ft =	7.00 ft	886.32 plf	SIP2	920.00	9.00	3.50	2.57	920.00 plf
	lb	ft +	ft +	ft +	ft +	ft +	ft +	ft +	ft =	ft	plf	-					
	lb	ft +	ft +	ft +	ft +	ft +	ft +	ft +	ft =	ft	plf	-					
	lb	ft +	ft +	ft +	ft +	ft +	ft +	ft +	ft =	ft	plf	-					
	lb	ft +	ft +	ft +	ft +	ft +	ft +	ft +	ft =	ft	plf	-					
	lb	ft +	ft +	ft +	ft +	ft +	ft +	ft +	ft =	ft	plf	-					
	lb	ft +	ft +	ft +	ft +	ft +	ft +	ft +	ft =	ft	plf	-					
	lb	ft +	ft +	ft +	ft +	ft +	ft +	ft +	ft =	ft	plf	-					
	lb	ft +	ft +	ft +	ft +	ft +	ft +	ft +	ft =	ft	plf	-					
	lb	ft +	ft +	ft +	ft +	ft +	ft +	ft +	ft =	ft	plf	-					
	lb	ft +	ft +	ft +	ft +	ft +	ft +	ft +	ft =	ft	plf	-					
	lb	ft +	ft +	ft +	ft +	ft +	ft +	ft +	ft =	ft	plf	-					

4425 CANOGA AVENUE WOODLAND HILLS CA 91364
PHONE (818) 347-7008 FAX (818) 883-8869

RICHMOND HOFFMAYER INC.
STRUCTURAL ENGINEERING

DATE 6/27/2017
SHEET _____

STRAP HOLD DOWN CAPACITY SCHEDULE:

UPLIFT CAPACITY IS BASED ON THE MINIMUM RATING x 0.75
SIMPSON STRAPS

HOLD DOWN	MFG RATING	POST	TEST RATING	LA REPORT	ICC REPORT	LARR 25910 25% REDUCTION	MAX DEFLECTION	NAIL SIZE	TOTAL NAILS
MST37	2710.00 lbs	4x	2710.00 lbs	RR25713	ESR-2105	2032.50 lbs	0.030	16d	22
MST48	4205.00 lbs	4x	4205.00 lbs	RR25713	ESR-2105	3153.75 lbs	0.030	16d	34
MST60	4605.00 lbs	4x	4605.00 lbs	RR25713	ESR-2105	3453.75 lbs	0.030	16d	34
MST72	6505.00 lbs	4x	6505.00 lbs	RR25713	ESR-2105	4878.75 lbs	0.030	16d	48
CMST12-42	10710.00 lbs	4x	9215.00 lbs	RR25713	ESR-2105	6911.25 lbs	0.030	16d	84
CMST14-33	7755.00 lbs	4x	6490.00 lbs	RR25713	ESR-2105	4867.50 lbs	0.030	16d	66
CS16-11	2080.00 lbs	4x	1705.00 lbs	RR25713	ESR-2105	1278.75 lbs	0.030	10d	22

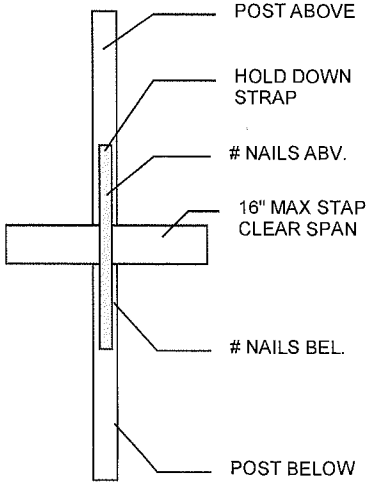

MST STRAP CALCULATION				
STRAP	GAGE	NAIL CAPACITY	# NAILS	TOTAL CAP.
MST37	12	149.00	11.00	1639.00
MST48	12	149.00	17.00	2533.00
MST60	10	154.00	17.00	2618.00
MST72	10	154.00	24.00	3696.00
NAIL VALUES BASE ON 2012 NDS 11P - 16d w/ G=0.5				

4425 CANOGA AVENUE WOODLAND HILLS CA 91364
PHONE (818) 347-7008 FAX (818) 883-8869

121

HOLD DOWN CAPACITY SCHEDULE:

HOLDOWN CAPACITIES BASED ON CODE TABLES AND RESEARCH REPORTS

SIMPSON HOLD DOWN CAPACITIES

SIMPSON HOLD DOWN	POST SIZE	ANCHOR DIAMETER	CATALOG CAPACITY lbs	da in	ICC REPORT	ICC CAPACITY lbs	ICC STRENGTH lbs	da in	LARR REPORT	75% CAP. lbs
HDU2-SDS2.5	4x4	0.625	3075.00	0.088	ICC-ESR 2330	3505.00	4907.00	0.088	25720	2628.75
HDU4-SDS2.5	4x4	0.625	4565.00	0.114	ICC-ESR 2330	4990.00	6986.00	0.114	25720	3742.50
HDU5-SDS2.5	4x4	0.625	5645.00	0.115	ICC-ESR 2330	5670.00	7938.00	0.115	25720	4252.50
HDQ8-SDS3	4x6	0.875	9230.00	0.095	ICC-ESR 2330	9230.00	12922.00	0.095	25720	6922.50
HDU11-SDS2.5	6x6	1.000	11175.00	0.137	ICC-ESR 2330	11175.00	15645.00	0.137	25270	8381.25
HHDQ14-SDS2.5	6x6	1.000	13710.00	0.107	ICC-ESR 2330	13710.00	19194.00	0.107	25270	10282.50
HD19	6x6	1.25	19070.00	0.137	ICC ES-0143	19070.00	26698.00	0.137	25828	19371.00
ZONE FOUR 48-9X	(2) 6x6	1.125	31174.00	0.032	ICC-ESR 5302	31174.00	43643.60	0.032	25334	31174.00

ANCHOR BOLTS IN 2,500 psi CONCRETE
TABLES FROM SIMPSON CATALOG C-2009

SIMPSON ANCHOR	ANCHOR BOLT	ANCHOR DIAMETER	CAPACITY lbs	de in	F in	ICC REPORT	ICC CAPACITY lbs	ICC STRENGTH lbs	LARR REPORT	LARR CAP lbs
SSTB16	5/8	0.625	4420.0	12.6	1.75	N.A.			25248	2695.00
SSTB20	5/8	0.625	4600.0	16.6	1.75	N.A.			25248	2987.00
SSTB24	5/8	0.625	5175.0	20.6	1.75	N.A.			25248	3360.00
SSTB28	7/8	0.875	10100.0	24.9	1.75	N.A.			25248	6558.00
	1	1.00	14120.0	10.0	15.00	N.A.			-	-
	1 1/8	1.13	45808.0	14.0	7.00	ICC-ESR 5302			25828	45808.00
	1 1/4	1.250	22580.0	14.0	21.00	N.A.			-	-

HOLD DOWN SUMMARY

SIMPSON HOLD DOWN	POST SIZE	ANCHOR LA CITY	ANCHOR ALTERNATE	75% ASSEMBLY CAPACITY lbs	100% ASSEMBLY CAPACITY lbs	ds in
HDU2-SDS2.5	4x4	SSTB16	5/8	2628.75	2695.00	0.1180
HDU4-SDS2.5	4x4	SSTB24	5/8	3360.00	3360.00	0.1540
HDU5-SDS2.5	4x4	SSTB24	5/8	3360.00	3360.00	0.1580
HDQ8-SDS3	4x6	SSTB28	7/8	6558.00	9230.00	0.1300
HDU11-SDS2.5	6x6	SEE ALT >	1	8381.25	11175.00	0.1820
HHDQ14-SDS2.5	6x8	SEE ALT >	1	10282.50	13710.00	0.1440
HD19	6x6	SEE ALT >	1 1/4	19371.00	25828.00	0.1855
ZONE FOUR 48-9X	(2) 6x6	SEE ALT >	1 1/8	31174.00	31174.00	0.032
				USE FOR UPLIFT DESIGN	USE FOR DEFLECTION DESIGN	

RICHMOND HOFFMAYER INC.
STRUCTURAL ENGINEERING

DATE 6/30/2017
SHEET _____

SEISMIC OVERTURNING DESIGN:

ASD LEVEL FORCES

USE EQUATION ASCE 7-11 12.4.2.3 #8

(0.6 - 0.14 Sds) D + 0.7 ρ Qe

Sds = 0.633

0.6 - 0.14 Sds = 0.511

USE THE LESSER OF ICC-ES AND LARR VALUES FOR HOLD DOWNS...CAPACITY IS BASED ON 0.75 x HOLD DOWN ALLOWABLE STRESS DESIGN CAPACITY

LINE #		LENGTH	HEIGHT	ADJUSTED ASD OVERTURNING		0.7 ρ Qe	WEIGHT	ADD LOAD	ADD LOAD	(0.6-0.14Sds) D RST OVERTURNING		+/- LEVER ARM	ADDED UPLIFT	WALL	NET UPLIFT	HOLDOWN	CAPACITY
#		ft	ft	plf	ft-lb	lb	plf	plf	lb	ft-lb	ft-lb	ft	lb	ABV.	lb	TYPE	lb
1	A	6.00	10.00	192.38	11542.8	1923.8	150.0	370.0		4786.8	6756.0	-0.50		-	1228.4	MST37	2032.5
1	B	5.00	10.00	192.38	9619.0	1923.8	150.0	370.0		3324.2	6294.8	-0.50		-	1398.8	MST37	2032.5
1	C	4.00	10.00	192.38	7695.2	1923.8	150.0	100.0		1022.8	6672.4	-0.50		-	1906.4	MST37	2032.5
2	A	5.50	10.00	230.86	12697.1	2308.6	150.0	100.0		1933.8	10763.3	-0.50		-	2152.7	MST48	3153.8
2	B	7.00	10.00	230.86	16159.9	2308.6	150.0	50.0		2505.9	13654.0	-0.50		-	2100.6	MST48	3153.8
3	A	7.00	10.00	307.43	21519.9	3074.3	150.0	50.0		2505.9	19014.0	-0.50		-	2925.2	MST48	3153.8
4	A	3.50	10.00	464.48	16256.7	4644.8	150.0	100.0		783.1	15473.6	-0.50		-	5157.9	CMST12-45	6911.3
4	B	3.50	10.00	464.48	16256.7	4644.8	150.0	100.0		783.1	15473.6	-0.50		-	5157.9	CMST12-45	6911.3
5	A	13.50	9.00	55.77	6775.8	501.9	100.0	100.0		9320.5	-2544.7	-0.50	1228.36	1A	1032.6	HDQ8-SDS3	6558.0
6	A	13.50	9.00	17.29	2101.0	155.6	100.0	100.0		9320.5	-7219.5	-0.50	2152.66	2A	1597.3	HDQ8-SDS3	6558.0
7	A	24.00	9.00	-199.26	-43041.0	-1793.4	100.0	100.0		29457.4	-72498.4	-0.50	2925.23	3A	-159.8	HDQ8-SDS3	6558.0
8	A	3.50	9.00	70.83	2231.0	637.4	100.0	100.0		626.5	1604.5	-0.50	5157.87	4A	5692.7	HHDQ14-SDS2.5	10282.5
8	B	3.50	9.00	70.83	2231.0	637.4	100.0	100.0		626.5	1604.5	-0.50	5157.87	4B	5692.7	HHDQ14-SDS2.5	10282.5
														-		-	
														-		-	
														-		-	
														-		-	
														-		-	

125

4425 CANOGA AVENUE WOODLAND HILLS CA 91364
PHONE (818) 347-7008 FAX (818) 883-8869

RICHMOND HOFFMAYER INC.
STRUCTURAL ENGINEERING

DATE 6/27/2017
SHEET _____

WIND OVERTURNING DESIGN:

ASD LEVEL FORCES

USE EQUATION ASCE 7-11 2.4.1 #7

0.6D + W

USE THE LESSER OF ICC-ES AND LARR VALUES FOR HOLD DOWNS

LINE #	LENGTH		HEIGHT	ASD FORCE	OVERTURNING	W	WEIGHT	ADD LOAD	ADD LOAD	0.6 D RST	OVERTURNING	+/- LEVER ARM	ADDED UPLIFT	WALL	NET UPLIFT	HOLDOWN	CAPACITY
#	ft		ft	plf	ft-lb	lb	plf	plf	lb	ft-lb	ft-lb	ft	lb	ABV.	lb	TYPE	lb
1	6.00	A	10.00	91.25	5475.28	912.55	150.00	370.0		5616.00	-140.72	-0.50		-	-25.59	MST37	2032.50
1	5.00	B	10.00	91.25	4562.73	912.55	150.00	370.0		3900.00	662.73	-0.50		-	147.27	MST37	2032.50
1	4.00	C	10.00	91.25	3650.18	912.55	150.00	100.0		1200.00	2450.18	-0.50		-	700.05	MST37	2032.50
2	5.50	A	10.00	109.51	6022.80	1095.06	150.00	100.0		2268.75	3754.05	-0.50		-	750.81	MST48	3153.75
2	7.00	B	10.00	109.51	7665.39	1095.06	150.00	50.0		2940.00	4725.39	-0.50		-	726.98	MST48	3153.75
3	7.00	A	10.00	195.55	13688.19	1955.46	150.00	50.0		2940.00	10748.19	-0.50		-	1653.57	MST48	3153.75
4	3.50	A	10.00	295.44	10340.41	2954.40	150.00	100.0		918.75	9421.66	-0.50		-	3140.55	CMST12-45	6911.25
4	3.50	B	10.00	295.44	10340.41	2954.40	150.00	100.0		918.75	9421.66	-0.50		-	3140.55	CMST12-45	6911.25
5	13.50	A	9.00	212.93	25870.68	1916.35	100.00	100.0		10935.00	14935.68	-0.50		1A	1148.90	HDQ8-SDS3	6558.00
6	13.50	A	9.00	194.68	23653.19	1752.09	100.00	100.0		10935.00	12718.19	-0.50	750.81	2A	1729.13	HDQ8-SDS3	6558.00
7	24.00	A	9.00	-24.44	-5279.73	-219.99	100.00	100.0		34560.00	-39839.73	-0.50	1653.57	3A	-41.74	HDQ8-SDS3	6558.00
8	3.50	A	9.00	590.88	18612.73	5317.92	100.00	100.0		735.00	17877.73	-0.50	3140.55	4A	9099.80	HHDQ14-SDS2.5	10282.50
8	3.50	B	9.00	590.88	18612.73	5317.92	100.00	100.0		735.00	17877.73	-0.50	3140.55	4B	9099.80	HHDQ14-SDS2.5	10282.50
														-		-	
														-		-	
														-		-	
														-		-	
														-		-	
														-		-	
														-		-	
														-		-	

J28

4425 CANOGA AVENUE WOODLAND HILLS CA 91364
PHONE (818) 347-7008 FAX (818) 883-8869

SHEAR WALL SEISMIC LOAD DEFLECTION CHECK - FLEXIBLE DIAPHRAGM ASSUMPTION:

STRENGTH LEVEL DESIGN

STRUCT I PLY - SPECIES GROUP 1, GRADE STESS LEVEL S-2 - E = 1,800,000 psi G = 90,000 psi & 19% MOISTURE CONTENT ASSUMED

I = 1.00

δ xe = (8vh^3 / Eab + vh/1000Ga + Σ da h/b)

δ x = Cd δxe / I

δ x' = (δx x 1.00)

Δa = 0.0250 hsx

ρ = 1.30 PER ASCE 7-10 12.3.4.1 ρ = 1.0 FOR DRIFT CALCULATIONS - ADJUST v ASD BY 1 / ρ

LINE #	LENGTH ft	h ft	PLY TYPE	v ASD plf	STRENGTH 1.4 v / ρ plf	HOLDOWN TYPE	A POST in^2	ASD T HD / ρ lb	Ta HD lb	HOLDOWN D/C RATIO	ds in	USE ds D/C in	Ga	VERTICAL ELONGATION ds SLIP in	ds CRUSH in	ds SHRINK in	8vh^3 /Eab in	vh/1000Ga in	Σ ds x h/b in	δ xe in	Cd	COMPARE δ x' in	Δa in
1	6.00	10.00	SIP6	192.4	207.2	MST37	12.25	945	2033	0.4649	0.030	0.014	13.0	0.010	0.020	0.050	0.013	0.159	0.157	0.336	4.0	1.34	3.00
1	5.00	10.00	SIP6	192.4	207.2	MST37	12.25	1076	2033	0.5294	0.030	0.016	13.0	0.010	0.020	0.050	0.015	0.159	0.192	0.374	4.0	1.50	3.00
1	4.00	10.00	SIP6	192.4	207.2	MST37	12.25	1466	2033	0.7215	0.030	0.022	13.0	0.010	0.020	0.050	0.019	0.159	0.254	0.440	4.0	1.76	3.00
2	5.50	10.00	SIP6	230.9	248.6	MST48	12.25	1656	3154	0.5251	0.030	0.016	13.0	0.010	0.020	0.050	0.016	0.191	0.174	0.393	4.0	1.57	3.00
2	7.00	10.00	SIP6	230.9	248.6	MST48	12.25	1616	3154	0.5124	0.030	0.015	13.0	0.010	0.020	0.050	0.013	0.191	0.136	0.351	4.0	1.41	3.00
3	7.00	10.00	SIP6	307.4	331.1	MST48	12.25	2250	3154	0.7135	0.030	0.021	13.0	0.010	0.020	0.050	0.017	0.255	0.145	0.436	4.0	1.74	3.00
4	3.50	10.00	SIP2	464.5	500.2	CMST12-45	12.25	3968	6911	0.5741	0.030	0.017	24.0	0.010	0.020	0.050	0.052	0.208	0.278	0.543	4.0	2.17	3.00
4	3.50	10.00	SIP2	464.5	500.2	CMST12-45	12.25	3968	6911	0.5741	0.030	0.017	24.0	0.010	0.020	0.050	0.052	0.208	0.278	0.543	4.0	2.17	3.00
5	13.50	9.00	SIP6	248.1	267.2	HDQ8-SDS3	19.25	794	6558	0.1211	0.130	0.016	13.0	0.010	0.020	0.050	0.003	0.185	0.064	0.263	4.0	1.05	2.70
6	13.50	9.00	SIP6	248.1	267.2	HDQ8-SDS3	19.25	1229	6558	0.1874	0.130	0.024	13.0	0.010	0.020	0.050	0.003	0.185	0.070	0.269	4.0	1.08	2.70
7	24.00	9.00	SIP6	108.2	116.5	HDQ8-SDS3	19.25	-123	6558	-0.0187	0.130		13.0	0.010	0.020	0.050	0.001	0.081	0.030	0.114	4.0	0.46	2.70
8	3.50	9.00	SIP2	535.3	576.5	HHDQ14-SDS2.5	39.88	4379	10283	0.4259	0.144	0.061	24.0	0.010	0.020	0.050	0.013	0.216	0.363	0.599	4.0	2.40	2.70
8	3.50	9.00	SIP2	535.3	576.5	HHDQ14-SDS2.5	39.88	4379	10283	0.4259	0.144	0.061	24.0	0.010	0.020	0.050	0.013	0.216	0.363	0.599	4.0	2.40	2.70

SHEAR WALL SUMMARY:

COMPARE SEISMIC AND WIND REQUIREMENTS FOR FINAL RESULTS

LINE #	LENGTH ft	SEISMIC FORCE plf	WIND FORCE plf	GOVERNING FORCE plf	WALL TYPE PER SCHED.	HOLD DOWN SIMPSON	WALL CAPACITY plf	
1	6.0	192.4	91.3	192.4	SIP6	MST37	360.0	S
1	5.0	192.4	91.3	192.4	SIP6	MST37	360.0	S
1	4.0	192.4	91.3	192.4	SIP6	MST37	360.0	S
2	5.5	230.9	109.5	230.9	SIP6	MST48	360.0	S
2	7.0	230.9	109.5	230.9	SIP6	MST48	360.0	S
3	7.0	307.4	195.5	307.4	SIP6	MST48	360.0	S
4	3.5	464.5	295.4	464.5	SIP2	CMST12-45	920.0	S
4	3.5	464.5	295.4	464.5	SIP2	CMST12-45	920.0	S
5	13.5	248.1	304.2	304.2	SIP6	HDQ8-SDS3	360.0	W
6	13.5	248.1	304.2	304.2	SIP6	HDQ8-SDS3	360.0	W
7	24.0	108.2	171.1	171.1	SIP6	HDQ8-SDS3	360.0	W
8	3.5	535.3	886.3	886.3	SIP2	HHDQ14-SDS2.5	920.0	W
8	3.5	535.3	886.3	886.3	SIP2	HHDQ14-SDS2.5	920.0	W
						-		-
						-		-
						-		-
						-		-
						-		-
						-		-
						-		-
						-		-
						-		-
						-		-
						-		-
						-		-
						-		-

RICHMOND HOFFMAYER INC.
STRUCTURAL ENGINEERING

DATE 6/30/2017
SHEET _____

OVERSTRENGTH LOAD SUMMARY

ASD LEVEL FORCES

USE EQUATION ASCE 7-11 12.4.3.2 #7

(0.6 - 0.14 Sds) D + Ωo Qe

Sds	=	0.633
0.6 - 0.14 Sds	=	0.511
Ωo	=	3.00

LINE #		LENGTH	HEIGHT	ADJUSTED V ASD	Ωo OVERTURNING	Ωo Qe	WEIGHT	ADD LOAD	ADD LOAD	(0.6-0.14Sds) D RST	NET O.T.	+/- LEVER ARM	ADDED UPLIFT	WALL	OVERSTRENGTH (0.6 - 0.14 Sds) D + Ωo Qe
#		ft	ft	plf	ft-lb	lb	plf	plf	lb	ft-lb	ft-lb	ft	lb	ABV.	lbs
1	A	6.00	10.00	192.38	26637.2	10245.1	150.0	370.0		4786.8	21850.4	-0.50		-	3972.8
1	B	5.00	10.00	192.38	22197.7	10245.1	150.0	370.0		3324.2	18873.5	-0.50		-	4194.1
1	C	4.00	10.00	192.38	17758.1	10245.1	150.0	100.0		1022.8	16735.3	-0.50		-	4781.5
2	A	5.50	10.00	230.86	29300.9	12294.1	150.0	100.0		1933.8	27367.1	-0.50		-	5473.4
2	B	7.00	10.00	230.86	37292.1	12294.1	150.0	50.0		2505.9	34786.2	-0.50		-	5351.7
3	A	7.00	10.00	307.43	49661.4	16371.9	150.0	50.0		2505.9	47155.5	-0.50		-	7254.7
4	A	3.50	10.00	464.48	37515.5	24735.5	150.0	100.0		783.1	36732.4	-0.50		-	12244.1
4	B	3.50	10.00	464.48	37515.5	24735.5	150.0	100.0		783.1	36732.4	-0.50		-	12244.1
5	A	13.50	9.00	55.77	15636.5	2672.9	100.0	100.0		9320.5	6316.0	-0.50	3972.79	1A	4458.6
6	A	13.50	9.00	17.29	4848.4	828.8	100.0	100.0		9320.5	-4472.1	-0.50	5473.43	2A	5129.4
7	A	24.00	9.00	-199.26	-99325.3	-9550.5	100.0	100.0		29457.4	-128782.7	-0.50	7254.69	3A	1774.6
8	A	3.50	9.00	70.83	5148.5	3394.6	100.0	100.0		626.5	4522.0	-0.50	12244.13	4A	13751.4
8	B	3.50	9.00	70.83	5148.5	3394.6	100.0	100.0		626.5	4522.0	-0.50	12244.13	4B	13751.4
														-	
														-	
														-	
														-	
														-	

133

4425 CANOGA AVENUE WOODLAND HILLS CA 91364
PHONE (818) 347-7008 FAX (818) 883-8869

RICHMOND HOFFMAYER INC.
STRUCTURAL ENGINEERING

PROJECT VILLAGE NEST JOB 2017-0610
CLIENT -
ADDRESS EDEN, UT
DESIGN HUUM
ENGINEER J.H. DATE 6/14/2017
RICHMOND PE 44628 HOFFMAYER SE 3455 SHEET 39 OF

DIAPHRAGMS:

$F_{x_{ROOF}} = \begin{matrix}264\\191\end{matrix}\} 264\ PLF$

$F_{y_{ROOF}} = \begin{matrix}197\\191\end{matrix}\} 197\ PLF$

STRENGTH SEISMIC

$v_{MAX} = 0.7(264)24/2(24)$

$ASD = 93\ PLF$

ROOF

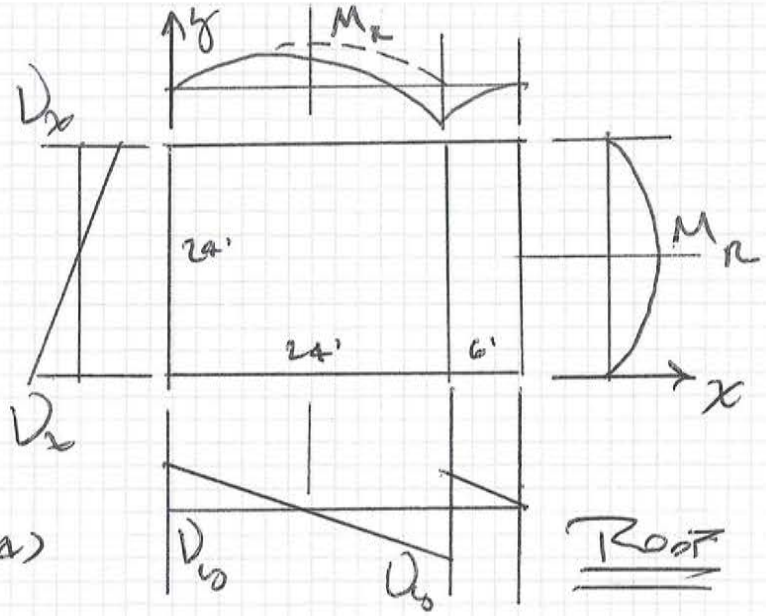

STRENGTH WIND

$F_{x_{2ND}} = \begin{matrix}43\\380\end{matrix}\} 380\ PLF$

$F_{y_{2ND}} = \begin{matrix}41\\380\end{matrix}\} 380\ PLF$

$v_{MAX} = 0.6(380)24/2(24)$

$ASD = 114\ PLF$

2ND FLOOR

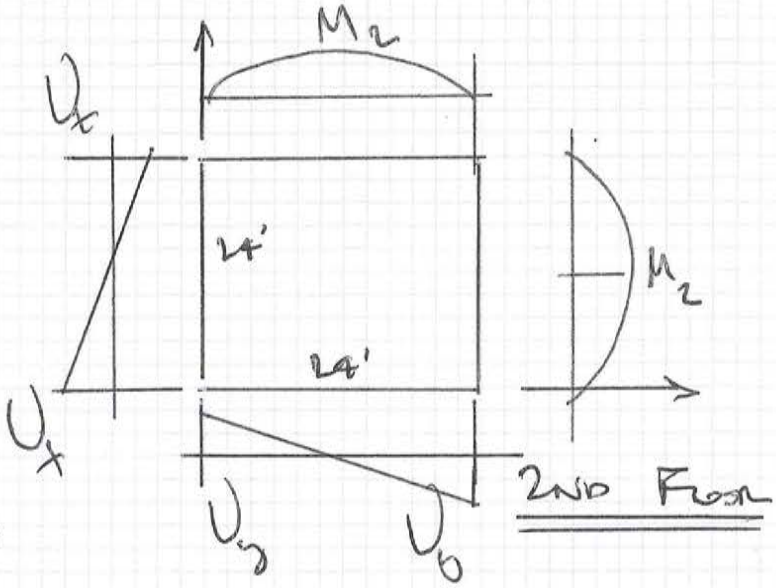

ROOF: TH 15/32 CDX/OSB W/ 8d@6" o.c. — CAP = 180 PLF
UNBLOCKED PII 34/16 — SEE NEXT PAGE...

FLOOR: TRY 1/2" STRUCT 1 OR THICKER W/10d@6" o.c.
TRG PII 46/24 — CAP = 245 PLF

4425 CANOGA AVENUE WOODLAND HILLS CA 91364
PHONE (818) 347-7008 FAX (818) 883-8869
Info@RichmondHoffmayer.com

RICHMOND HOFFMAYER INC.
STRUCTURAL ENGINEERING

PROJECT	VILLAGE NEST	JOB	2017-0610
CLIENT	-		
ADDRESS	EDEN, UT		
DESIGN	HUUM		
ENGINEER	J.H.	DATE	6/14/2017
	RICHMOND PE 44628 HOFFMAYER SE 3935	SHEET	35 OF

PLY W/ SNOW LOAD:

SPAN = 16" oc

W_s = 264 PSF

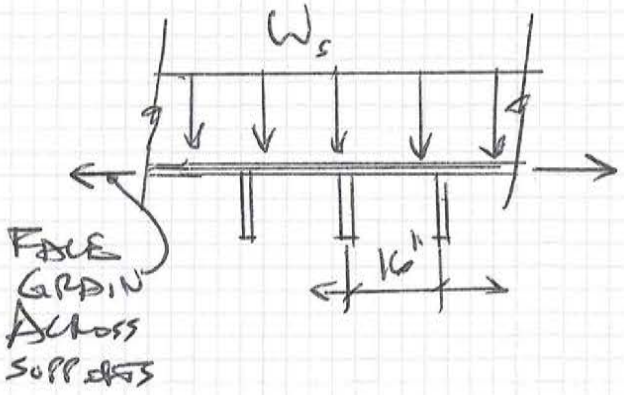

PER APA
REQ'D SPAN RATING
40/20 –

LIMITED TO 293 PSF MAX (BENDING GOVERNS)

$C_D = 1.16 \rightarrow 264/1.16 = 229$ PSF < 293 PSF OK

ROOF REQUIRES
- 5/8" OSB PLY
- W/ PII 40/20 – T&G
- W/ load @ 6", 12"

4425 CANOGA AVENUE WOODLAND HILLS CA 91364
PHONE (818) 347-7008 FAX (818) 883-8869
Info@RichmondHoffmayer.com

RICHMOND HOFFMAYER INC.
STRUCTURAL ENGINEERING

PROJECT	VILLAGE NEST	JOB	2017-0610
CLIENT	-		
ADDRESS	EDEN, UT		
DESIGN	HUUM		
ENGINEER	J.H.	DATE	6/14/2017
	RICHMOND PE 44628 HOFFMAYER SE 3455	SHEET	36 OF

CHORDS & DRAGS:

MAX CHORD $\Rightarrow (0.6(300)\ 24^2/8)/24 = 6.84$ k (M_{max})

USE SINGLE SIP TOP PLATE W/ LSTAIL STRAP - CAP = 7.95 k ✓

~~N.A.~~

OPTION:

USE ↓

* USE SINGLE 2x TOP PLATE W/ 1.3E RIM BOARD - SEE PG # 157

PREFERRED

SEE PLATE SPLICE, PG # 22-8

4425 CANOGA AVENUE WOODLAND HILLS CA 91364
PHONE (818) 347-7008 FAX (818) 883-8869
Info@RichmondHoffmayer.com

RICHMOND HOFFMAYER INC.
STRUCTURAL ENGINEERING

PROJECT	VILLAGE NEST	JOB	2017-0610
CLIENT	-		
ADDRESS	EDEN, UT		
DESIGN	HUUM		
ENGINEER	J.H.	DATE	6/14/2017
	RICHMOND PE 44628 HOFFMAYER SE 3435	SHEET	194 OF

SIP WALL INFORMATION:

ICC-ES ESR-1882

TRY TYPE "S" PANELS

SEISMIC DESIGN CATEGORY D - PERIODIC SPECIAL INSPECTION REQUIRED FOR FASTENINGS AND ANCHORING OF SHEAR WALLS.

TRY 7-1/4" PANEL CORE THICKNESS.

→ MAX HEIGHT = 10'-6"

$W_{UNIF\ ROOF} = (15.0D + 20L_r + 26.4_S)\,14'/2 = \underline{2099\ PLF}$

$W_{UNIF\ 2ND} = (14.3D + 40L)\,8'/2 = \underline{217\ PLF}$

$W_{MAX} = 2099 + 217 = \underline{2316\ PLF}$

SEE TABLE 5 NEXT PAGE, CAP = 4326 PLF ✓

→ MAX HEADER SPAN W/O POINT LOAD = 4.5'

$W_{MAX} \leq 2099\ PLF$

SEE TABLE 14, PG #196, CAP = 2620 PLF ✓

DBL TRIMMER, PREMIER INSUL-BEAM II

4425 CANOGA AVENUE WOODLAND HILLS CA 91364
PHONE (818) 347-7008 FAX (818) 883-8869
Info@RichmondHoffmayer.com

TABLE 4—UNIFORM TRANSVERSE LOADS FOR FACE SUPPORTED PREMIER TYPE L PANELS[1,2,3] (psf)

PANEL CORE THICKNESS (inches)	DEFLECTION	PANEL SPAN									
		4 ft[4]	8 ft	10 ft	12 ft	14 ft	16 ft	18 ft	20 ft	22 ft	24 ft
$3^1/_2$[5]	$L/_{360}$	98	45	32	24	16	11	----	----	----	----
	$L/_{240}$	215	67	47	34	24	16	----	----	----	----
	$L/_{180}$	298*	90	61	44	34	22	----	----	----	----
$5^1/_2$[6]	$L/_{360}$	241	128	57	41	33	25	20	15	----	----
	$L/_{240}$	288*	182*	86	60	49	37	29	22	----	----
	$L/_{180}$	288*	182*	112*	79	65	49	39	29	----	----
$7^1/_4$[7]	$L/_{360}$	241	168	80	65	54	42	33	24	----	----
	$L/_{240}$	288*	188*	126	99	81	61	49	34	----	----
	$L/_{180}$	288*	188*	133*	117*	105	80	62	44	----	----
$9^1/_4$[8]	$L/_{360}$	274	188*	116	100	80	62	47	35	32	28
	$L/_{240}$	326*	188*	147*	134*	120	92	70	52	46	41
	$L/_{180}$	326*	188*	147*	134*	121*	108*	93	68	61	53
$11^1/_4$[8]	$L/_{360}$	327*	188*	167*	140	116	90	75	57	47	36
	$L/_{240}$	327*	188*	167*	153*	132*	110*	97*	83*	69	53
	$L/_{180}$	327*	188*	167*	153*	132*	110*	97*	83*	83*	70

For **SI:** 1 inch = 25.4 mm, 1 psf = 47.9 Pa, 1 foot = 304.8 mm.

[1]Floor panels must have a minimum $^3/_4$-inch-thick top skin or a minimum $^7/_{16}$-inch-thick top skin overlaid with minimum $^7/_{16}$-inch-thick finish flooring perpendicular to the panels.
[2]The tabulated values are for roof and floor panels installed with simply supported single span conditions with panels supported at each end on a minimum $1^1/_2$-inch-wide continuous support in contact with the panel face. Tabulated values are applicable to panels installed with the strong axis of the OSB panel facers parallel to the panel span.
[3]Allowable loads with an asterisk, *, indicates a capacity based on the average peak test load divided by 3.
[4]Panels spanning 4 feet shall be a minimum of 8 feet long spanning a minimum of two 4 foot spans. No single span conditions must be permitted.
[5]$3^1/_2$-inch thick core panels must be limited to a maximum span of 10 feet when used in roof applications.
[6]$5^1/_2$-inch thick core panels must be limited to a maximum span of 14 feet when used in roof applications.
[7]$7^1/_4$-inch thick core panels must be limited to a maximum span of 18 feet when used in roof applications.
[8]$9^1/_4$ and $11^1/_4$-inch thick core panels shall be limited to a maximum span of 20 feet when used in roof applications.

TABLE 5—ALLOWABLE UNIFORM AXIAL LOADS FOR PREMIER TYPE S PANELS (plf)[1,2,3,4]

PANEL CORE THICKNESS (inches)	PANEL SPAN					
	8 ft	10 ft	12 ft	16 ft	20 ft	24 ft
$3^1/_2$	3,500	2,555	2,450	2,120	----	----
$5^1/_2$	4,250	4,040	3,375	3,920	2,815	----
$7^1/_4$	4,915	4,325	4,475	4,195	3,495	3,065
$9^1/_4$	4,200	4,200	4,200	4,200	3,389	3,247
$11^1/_4$	3,890	3,890	3,890	3,890	3,890	3,333

For **SI:** 1 inch = 25.4 mm, 1 plf = 14.6 N/m, 1 foot = 304.8 mm.

[1]For the allowable axial load on the fire-resistance-rated assembly, see Section 4.2.6.
[2]For combined loads; requirements in Section 4.1 must be applied.
[3]The tabulated loads are uniform axial loads applied concentrically to the full thickness of the panels, including panel facings.
[4]The tabulated values are for panels installed with strong axis of the OSB panel facers parallel to the wall height (panel span) and on concrete foundations. The member, element, or structure supporting the bearing wall panels, as shown in Figures 7, 8 and 9, must be designed for the bearing stress of the wall panels to the satisfaction to the code official.

TABLE 6—ALLOWABLE UNIFORM AXIAL LOADS FOR PREMIER TYPE L PANELS (plf)[1,2,3,4]

PANEL CORE THICKNESS (inches)	PANEL SPAN					
	8 ft	10 ft	12 ft	16 ft	20 ft	24 ft
$3^1/_2$	4,725	3,905	3,095	2,350	----	----
$5^1/_2$	5,850	5,890	4,280	4,310	2,933	----
$7^1/_4$	6,850	6,110	5,555	5,180	4,835	4,080
$9^1/_4$	5,470	5,470	5,470	5,470	5,470	4,250
$11^1/_4$	4,500	4,333	4,167	3,750	3,750	3,333

For **SI:** 1 inch = 25.4 mm, 1 plf = 14.6 N/m, 1 foot = 304.8 mm.

[1]For the allowable axial load on fire-resistance-rated assembly, see Section 4.2.7.
[2]For combined loads; requirements in Section 4.1 must be applied.
[3]The tabulated loads are uniform axial loads applied concentrically to the full thickness of the panels, including panel facings.
[4]The tabulated values are for panels installed with strong axis of the OSB panel facers parallel to the wall height (panel span) on concrete foundations. The member, element, or structure supporting the bearing wall panels, as shown in Figures 7, 8 and 9, must be designed for the bearing stress of the wall panels to the satisfaction to the code official.

196

Table 13: Wind Speed vs. Pressure

Wall Loads (psf) - End Zone (Zone 5) for 100sf to 500 sf effective wind area												
Mean Roof Height (ft)	90 MPH			100 MPH			110 MPH			120 MPH		
	Exp B	Exp C	Exp D	Exp B	Exp C	Exp D	Exp B	Exp C	Exp D	Exp B	Exp C	Exp D
15	-15.1	-18.3	-22.2	-18.7	-22.6	-27.5	-22.6	-27.3	-33.2	-26.9	-32.5	-39.5
20	-15.1	-19.5	-23.4	-18.7	-24.1	-29.0	-22.6	-29.2	-35.0	-26.9	-34.7	-41.7
25	-15.1	-20.4	-24.3	-18.7	-25.2	-30.1	-22.6	-30.5	-36.4	-26.9	-36.3	-43.3
30	-15.1	-21.1	-25.1	-18.7	-26.2	-31.0	-22.6	-31.6	-37.5	-26.9	-37.7	-44.7
35	-15.9	-21.9	-25.7	-19.6	-27.1	-31.8	-23.7	-32.8	-38.4	-28.2	-39.0	-45.7
40	-16.5	-22.5	-26.3	-20.4	-27.9	-32.5	-24.6	-33.7	-39.3	-29.3	-40.1	-46.8
45	-16.9	-23.1	-26.9	-20.9	-28.6	-33.3	-25.3	-34.6	-40.2	-30.1	-41.2	-47.9
50	-17.5	-23.6	-27.3	-21.7	-29.2	-33.8	-26.2	-35.3	-40.9	-31.2	-42.0	-48.7
55	-18.0	-24.0	-27.8	-22.3	-29.7	-34.4	-26.9	-35.9	-41.6	-32.0	-42.8	-49.5
60	-18.4	-24.5	-28.2	-22.8	-30.3	-35.0	-27.6	-36.6	-42.3	-32.8	-43.6	-50.3
Net Design wind pressure	-15.1			-18.7			-22.6			-26.9		

Wall Loads (psf) - End Zone (Zone 5) for 100sf to 500sf effective wind area												
Mean Roof Height (ft)	130 MPH			140 MPH			150 MPH			170 MPH		
	Exp B	Exp C	Exp D	Exp B	Exp C	Exp D	Exp B	Exp C	Exp D	Exp B	Exp C	Exp D
15	-31.6	-38.2	-46.5	-36.7	-44.4	-53.9	-42.1	-50.9	-61.9	-54.1	-65.5	-79.5
20	-31.6	-40.8	-49.0	-36.7	-47.3	-56.9	-42.1	-54.3	-65.3	-54.1	-69.8	-83.9
25	-31.6	-42.7	-50.9	-36.7	-49.5	-59.1	-42.1	-56.8	-67.8	-54.1	-73.0	-87.1
30	-31.6	-44.2	-52.5	-36.7	-51.4	-60.9	-42.1	-58.9	-69.9	-54.1	-75.7	-89.8
35	-33.2	-45.8	-53.7	-38.5	-53.2	-62.4	-44.2	-61.1	-71.6	-56.8	-78.4	-92.0
40	-34.4	-47.1	-55.0	-40.0	-54.7	-63.9	-45.9	-62.7	-73.3	-59.0	-80.6	-94.1
45	-35.4	-48.3	-56.2	-41.1	-56.2	-65.3	-47.2	-64.4	-74.9	-60.6	-82.8	-96.3
50	-36.7	-49.3	-57.2	-42.6	-57.3	-66.4	-48.8	-65.7	-76.2	-62.8	-84.4	-97.9
55	-37.6	-50.2	-58.1	-43.7	-58.4	-67.5	-50.1	-66.9	-77.5	-64.4	-86.0	-99.5
60	-38.6	-51.2	-59.1	-44.8	-59.5	-68.6	-51.4	-68.2	-78.7	-66.0	-87.6	-101.2
Net Design wind pressure	-31.6			-36.7			-42.1			-54.1		

More information on this chart can be found in Technical Bulletin #15 (www.premiersips.com).

Table 14: Premier Insul-Beam II Header Loads (plf)

No. of Trimmer Studs	Deflection	Header Span (ft.)						
		2'	3'	4'	5'	6'	7'	8'
1	L/480	3150	2100	1575	1260	1050	900	788
	L/360	3150	2100	1575	1260	1050	900	788
	L/240	3150	2100	1575	1260	1050	900	788
2	L/480	6300	4200	3150	2520	2100	1800	1545
	L/360	6300	4200	3150	2520	2100	1800	1575
	L/240	6300	4200	3150	2520	2100	1800	1575

No. of Trimmer Studs	Deflection	Header Span (ft.)							
		9'	10'	11'	12'	13'	14'	15'	16'
1	L/480	700	630	573	458	360	288	234	193
	L/360	700	630	573	525	480	384	313	257
	L/240	700	630	573	525	485	450	420	386
2	L/480	1085	791	594	458	360	288	234	193
	L/360	1400	1055	792	610	480	384	313	257
	L/240	1400	1245	792	864	720	577	469	386

Values listed for each deflection represent the least value of the bearing capacity of the trimmer, shear or bending capacity of the header or the actual deflection at the design load.
Refer to Technical Bulletin #30 for supporting headers in Premier SIPs wall panels (www.premiersips.com).
Note: Trimmer stud design capacities must be reviewed.

SINGLE TOP PLATE W/ CAP

Table 6: Maximum Allowable Axial Compression Point Loads (lbs) – Type S Panels[1,2,3,4]

Top Plate Configuration	1.5" Minimum Bearing Width	3" Minimum Bearing Width
Single 2x4 #2 or Better Hem-Fir Plate	2040	2450
Single 2x4 #2 or Better Hem-Fir Plate with 1-1/8 in. wide, 1.3E Rim Board Cap Plate	4030	4678

[1] Top plate secured to facings as required in Section 6.3
[2] Permanent loads, such as dead load, shall not exceed 0.50 times the tabulated load.
[3] Concentrated loads shall be applied concentrically to the top of the panel.
[4] Tabulated values are based on the strong-axis of the facing material oriented parallel to the span direction.

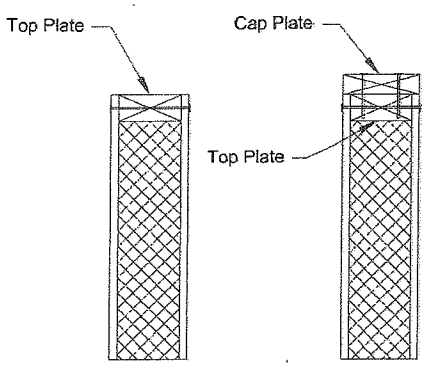

Figure 3: Top Plate Configurations

2099 PLF x 16/12 = 2799 lb LOAD FROM PLF

Table 7: Maximum Allowable Uniform SIP Header Vertical Loads (plf)
3-1/2 in. through 11-1/4 in. Core Thickness[1,2]

Continuous over opening

Header Depth[3] (in)	Deflection Limit[4]	Header Span (ft)			
		4	6	8	10
12	L/480	740	384	228	142
	L/360	740	384	229	142
	L/240	740	384	229	142
18	L/480	798	574	385	311
	L/360	798	574	385	311
	L/240	798	574	385	311
24	L/480	886	629	429	361
	L/360	886	629	429	361
	L/240	886	629	429	361

[1] Vertical loads only. Lateral loads shall be transferred to the edges of the openings through continuous plate(s) designed in accordance with accepted engineering practice. Permanent loads, such as dead load, shall not exceed 0.50 times the tabulated load.
[2] Tabulated values are based on the strong-axis of the facing material oriented perpendicular to the direction of header span.
[3] Minimum depth of facing above opening.
[4] Deflection limit shall be selected by building designer based on the serviceability requirements of the structure and the requirements of adopted building code.

Table 8: Maximum Allowable Uniform Header Loads (plf)
(Panel Splice a minimum of 6 in. from edge of opening) 3-1/2 in. through 11-1/4 in. Core Thickness[1,2]

SIPs wall panel spline minimum 6" from edge of opening

Header Depth[3] (in)	Deflection Limit[4]	Header Span (ft)			
		4	6	8	10
12	L/480	345	243	156	99
	L/360	450	295	190	125
	L/240	630	382	236	153
18	L/480	705	388	254	235
	L/360	750	482	302	281
	L/240	750	482	302	281
24	L/480	698	556	368	350
	L/360	896	556	368	350
	L/240	896	556	368	350

[1] Vertical loads only. Lateral loads shall be transferred to the edges of the openings through continuous plate(s) designed in accordance with accepted engineering practice. Permanent loads, such as dead load, shall not exceed 0.50 times the tabulated load.
[2] Tabulated values are based on the strong-axis of the facing material oriented perpendicular to the direction of header span.
[3] Minimum depth of facing above opening.
[4] Deflection limit shall be selected by building designer based on the serviceability requirements of the structure and the requirements of adopted building code.

RICHMOND HOFFMAYER INC.
STRUCTURAL ENGINEERING

PROJECT	VILLAGE NEST	JOB	2017-0610
CLIENT	-		
ADDRESS	EDEN, UT		
DESIGN	HUUM		
ENGINEER	J.H.	DATE	6/14/2017
	RICHMOND PE 44628 HOFFMAYER SE 3435	SHEET	27 OF

DIAPHRAGMS:

$F_{x\,ROOF} = \begin{matrix} 394 \\ 191 \end{matrix} \Big\} 394\ PLF$ ← SEISMIC STRENGTH

$F_{y\,ROOF} = \begin{matrix} 191 \\ 191 \end{matrix} \Big\} 191\ PLF$

$v_{MAX_x} = 0.7(394)\frac{24'}{2(43')}$

$= 70\ PLF$

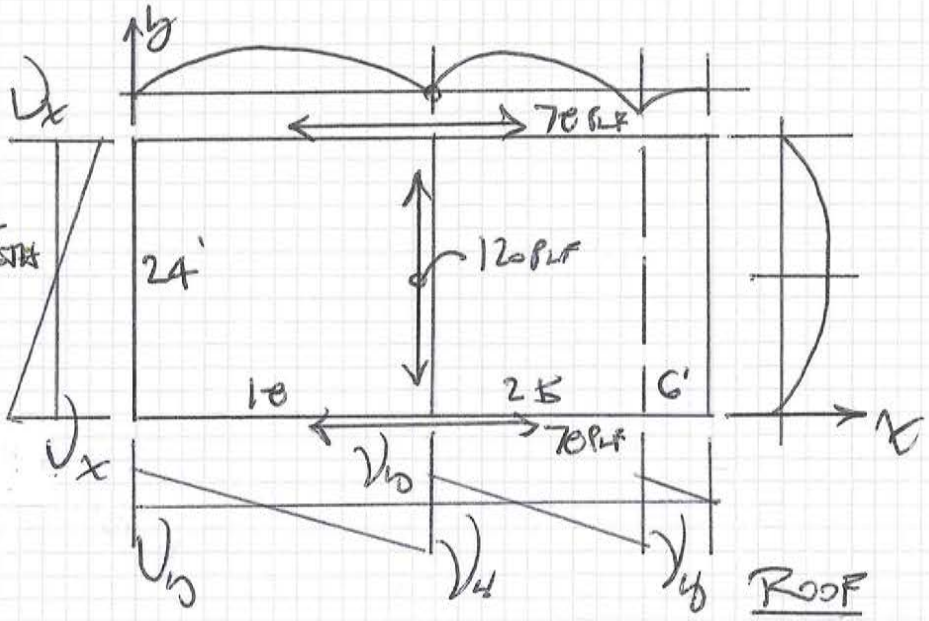

ROOF

$v_{MAX_y} = 0.7(191)\frac{43'}{2(24')}$

$= 120\ PLF$ ROOF

WIND STRENGTH

$F_{x\,2ND} = \begin{matrix} 42 \\ 332 \end{matrix} \Big\} 332\ PLF$

$F_{y\,2ND} = \begin{matrix} 39 \\ 300 \end{matrix} \Big\} 300\ PLF$

$v_{MAX} = 0.6(300)\frac{24'}{24.2'} = 114\ PLF$

2ND FLOOR

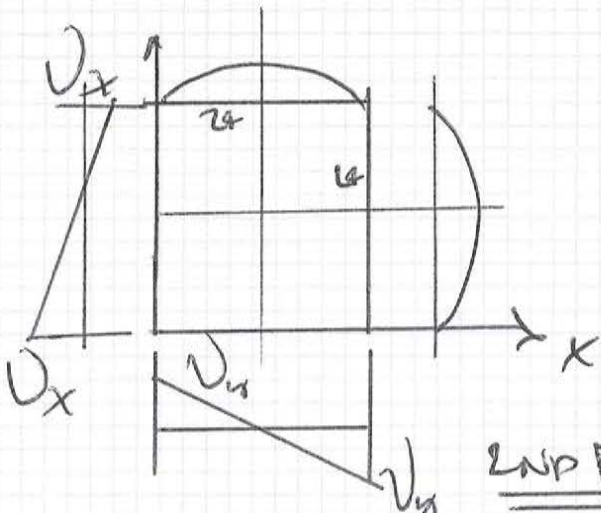

2ND FLOOR

ROOF W/ SNOW REQUIRES PII 40/20 FOR 264 PLF & 16" SPANS

ROOF 5/8" CDX OR OSB PLY PII 40/20 T&G W/ 10d @ 6", 12"

2ND FLOOR 5/8" STRUCT I OR THICKER T&G PII 40/24 W/ 10d @ 6, 12"

4425 CANOGA AVENUE WOODLAND HILLS CA 91364
PHONE (818) 347-7008 FAX (818) 883-8869
Info@RichmondHoffmayer.com

RICHMOND HOFFMAYER INC.
STRUCTURAL ENGINEERING

PROJECT	VILLAGE NEST	JOB	2017-0610
CLIENT	-		
ADDRESS	EDEN, UT		
DESIGN	HUUM		
ENGINEER	J.H.	DATE	6/14/2017
	RICHMOND PE 44628 HOFFMAYER SE 3435	SHEET	12C OF

CHORDS & DRAGS:

M_{MAX}

MAX CHORD $\Rightarrow \left(0.6(3-80)24^2/8\right)/24 = \underline{\underline{684\ lb}}$

USE [SINGLE 2x TOP PLATE
w/ 1.3E RIM BOARD CAP PLATE
SEE PG. #157

LAP CAP PL w/ (2) 8d NAILS @ 6" OC

$Z_{\parallel NAIL} = 63\ lb/NAIL \times 2 \times 12/6 = 252\ lb/ft$ LAP

LAP CAP PL $684/252 = 2.71 \rightarrow \underline{\underline{3'}}$

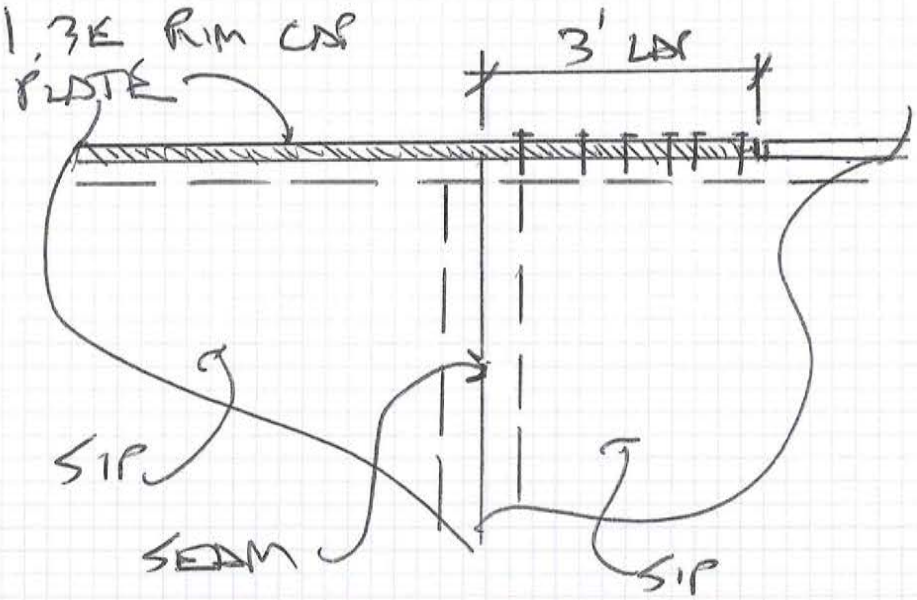

4425 CANOGA AVENUE WOODLAND HILLS CA 91364
PHONE (818) 347-7008 FAX (818) 883-8869
Info@RichmondHoffmayer.com

RICHMOND HOFFMAYER INC.
STRUCTURAL ENGINEERING

STAIR STRINGERS AND TREADS:

UNIFORM LOAD

WD	=	10.00 psf	DEAD LOAD
RISE	=	7.50 in	MAX. RISE
RUN		10.00 in	MIN. RUN
WD'	=	15.54 psf	FACTORED DEAD LOAD FOR SLOPE
WL	=	40.00 psf	RESIDENTIAL LIVE LOAD
PL	=	300.00 lbs	PLACED ON TREADS FOR MAXIMUM STRESS
NOTCH	=	6.00 in	MAXIMUM NOTCH IN STRINGERS

DF#2 TIMBER PROPERTIES

Fv	=	95.00 psi	ALLOWABLE SHEAR STRESS
Fb	=	870.00 psi	ALLOWABLE BENDING STRESS
E	=	1.60E+06 psi	MODULUS OF ELASTICITY

LSL LUMBER PROPERTIES

Fv	=	400.00 psi	ALLOWABLE SHEAR STRESS
Fb	=	1700.00 psi	ALLOWABLE BENDING STRESS
E	=	1.30E+06 psi	MODULUS OF ELASTICITY

PSL LUMBER PROPERTIES

Fv	=	290.00 psi	ALLOWABLE SHEAR STRESS
Fb	=	2900.00 psi	ALLOWABLE BENDING STRESS
E	=	2.00E+06 psi	MODULUS OF ELASTICITY

STRINGER SIZE	Cf	F'b	WIDTH B	DEPTH D	D'	MOMENT CAPACITY	SHEAR CAPACITY
2x10 LSL	1.02	1736.93 psi	1.25	9.50	3.50	369.40 ft-lbs	1166.67 lbs
DBL 2x10 DF	1.10	957.00 psi	3.00	9.25	3.25	421.18 ft-lbs	2600.00 lbs
2x14 DF	0.90	783.00 psi	1.50	13.25	7.25	857.43 ft-lbs	2900.00 lbs
DBL 2x12 DF	1.00	870.00 psi	3.00	11.25	5.25	999.14 ft-lbs	4200.00 lbs
2x12 LSL	1.00	1701.64 psi	1.25	11.88	5.88	1019.67 ft-lbs	1958.33 lbs
4x12 DF	1.10	957.00 psi	3.50	11.25	5.25	1282.23 ft-lbs	4900.00 lbs
DBL 2x14 DF	0.90	783.00 psi	3.00	13.25	7.25	1714.85 ft-lbs	5800.00 lbs
2x14 LSL	0.99	1676.06 psi	1.25	14.00	8.00	1862.29 ft-lbs	2666.67 lbs
4x14 DF	1.00	870.00 psi	3.50	13.25	7.25	2222.96 ft-lbs	6766.67 lbs
4x12 PSL	1.00	2903.37 psi	3.50	11.88	5.88	4871.40 ft-lbs	5483.33 lbs
4x14 PSL	0.98	2850.80 psi	3.50	14.00	8.00	8869.16 ft-lbs	7466.67 lbs

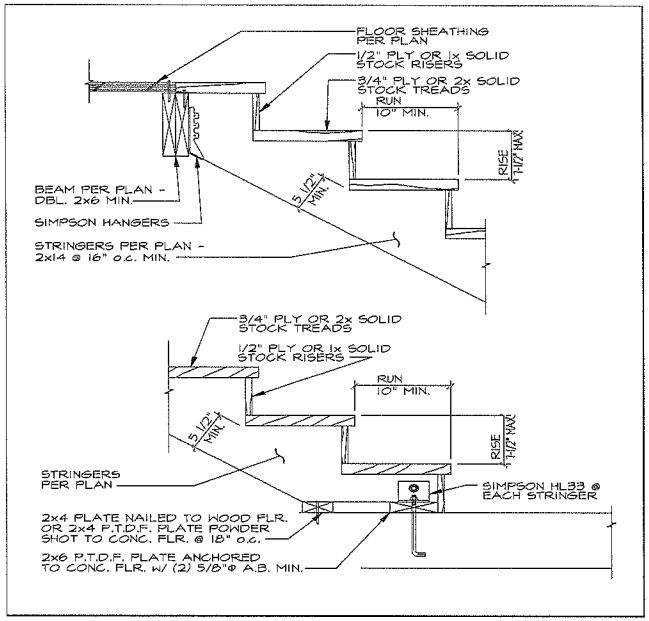

STRINGER SPACING	TOTAL UNIF. LOAD		HORIZONTAL PROJECTED SPAN VS. STRIINGER MOMENT AND SHEAR 6.00 ft	7.00 ft	8.00 ft	9.00 ft	10.00 ft	11.00 ft	12.00 ft	13.00 ft	14.00 ft	15.00 ft	16.00 ft
12 in o.c.	55.5 plf	MOMENT	249.93	340.18	444.32	562.34	694.25	840.04	999.72	1173.28	1360.73	1562.06	1777.28
		SHEAR	166.62	194.39	222.16	249.93	277.70	305.47	333.24	361.01	388.78	416.55	444.32
		SIZE	2x10 LSL	2x10 LSL	2x14 DF	2x14 DF	2x14 DF	2x14 DF	2x12 LSL	4x12 DF	DBL 2x14 DF	DBL 2x14 DF	2x14 LSL
16 in o.c.	74.1 plf	MOMENT	333.24	453.58	592.43	749.79	925.67	1120.06	1332.96	1564.38	1814.31	2082.75	2369.71
		SHEAR	222.16	259.19	296.21	333.24	370.27	407.29	444.32	481.35	518.37	555.40	592.43
		SIZE	2x10 LSL	2x14 DF	2x14 DF	2x14 DF	DBL 2x12 DF	4x12 DF	DBL 2x14 DF	DBL 2x14 DF	2x14 LSL	4x14 DF	4x12 PSL
18 in o.c.	83.3 plf	MOMENT	374.89	510.27	666.48	843.51	1041.37	1260.06	1499.58	1759.92	2041.09	2343.09	2665.92
		SHEAR	249.93	291.58	333.24	374.89	416.55	458.20	499.86	541.51	583.17	624.82	666.48
		SIZE	DBL 2x10 DF	2x14 DF	2x14 DF	2x14 DF	4x12 DF	4x12 DF	DBL 2x14 DF	2x14 LSL	4x14 DF	4x12 PSL	4x12 PSL
24 in o.c.	111.1 plf	MOMENT	499.86	680.36	888.64	1124.68	1388.50	1680.08	1999.44	2346.56	2721.46	3124.12	3554.56
		SHEAR	333.24	388.78	444.32	499.86	555.40	610.94	666.48	722.02	777.56	833.10	888.64
		SIZE	2x14 DF	2x14 DF	DBL 2x12 DF	4x12 DF	DBL 2x14 DF	DBL 2x14 DF	4x14 DF	4x12 PSL	4x12 PSL	4x12 PSL	4x12 PSL
30 in o.c.	138.8 plf	MOMENT	624.82	850.46	1110.80	1405.86	1735.62	2100.11	2499.30	2933.21	3401.82	3905.16	4443.20
		SHEAR	416.55	485.97	555.40	624.82	694.25	763.67	833.10	902.52	971.95	1041.37	1110.80
		SIZE	2x14 DF	2x14 DF	4x12 DF	DBL 2x14 DF	2x14 LSL	4x14 DF	4x12 PSL	4x12 PSL	4x12 PSL	4x12 PSL	4x12 PSL
32 in o.c.	148.1 plf	MOMENT	666.48	907.15	1184.85	1499.58	1851.33	2240.11	2665.92	3128.75	3628.61	4165.50	4739.41
		SHEAR	444.32	518.37	592.43	666.48	740.53	814.59	888.64	962.69	1036.75	1110.80	1184.85
		SIZE	2x14 DF	DBL 2x12 DF	4x12 DF	DBL 2x14 DF	2x14 LSL	4x12 PSL	4x12 PSL	4x12 PSL	4x12 PSL	4x12 PSL	4x12 PSL
36 in o.c.	166.6 plf	MOMENT	749.79	1020.55	1332.96	1687.03	2082.75	2520.13	2999.16	3519.85	4082.19	4686.19	5331.84
		SHEAR	499.86	583.17	666.48	749.79	833.10	916.41	999.72	1083.03	1166.34	1249.65	1332.96
		SIZE	2x14 DF	4x12 DF	DBL 2x14 DF	DBL 2x14 DF	4x14 DF	4x12 PSL	4x12 PSL	4x12 PSL	4x12 PSL	4x12 PSL	4x14 PSL
48 in o.c.	222.2 plf	MOMENT	999.72	1360.73	1777.28	2249.37	2777.00	3360.17	3998.88	4693.13	5442.92	6248.25	7109.12
		SHEAR	666.48	777.56	888.64	999.72	1110.80	1221.88	1332.96	1444.04	1555.12	1666.20	1777.28
		SIZE	2x12 LSL	DBL 2x14 DF	2x14 LSL	4x12 PSL	4x12 PSL	4x12 PSL	4x12 PSL	4x12 PSL	4x14 PSL	4x14 PSL	4x14 PSL

TREAD DESIGN

P	=	300.00 lbs	POINT LOAD - APPLY ANYWHERE ON TREAD
L	=	48.00 in	MAXIMUM TREAD SPAN
V MAX	=	300.00 lbs	MAXIMUM TREAD SHEAR - LOAD AT SIDE REACTION
M MAX	=	3600.00 in-lbs	MAXIMUM TREAD MOMENT - LOAD AT MID SPAN
A REQ'D	=	4.74 in^2	DF #2
S REQ'D	=	4.11 in^3	DF #2
TRY		2x8 MIN	FLAT TREAD - TRUE SIZE = 2" x 8" MIN.
A	=	18.13 in^2	O.K.
S	=	4.83 in^3	O.K.

USE 2x14 1.9E LVL @ 16" OC STRINGERS

4425 CANOGA AVENUE WOODLAND HILLS CA 91364
PHONE (818) 347-7008 FAX (818) 883-8869

RICHMOND HOFFMAYER INC.
STRUCTURAL ENGINEERING

PROJECT	VILLAGE NEST	JOB	2017-0610
CLIENT	-		
ADDRESS	EDEN, UT		
DESIGN	HUUM		
ENGINEER	J.H.	DATE	6/14/2017
	RICHMOND PE 44628 HOFFMAYER SE 3435	SHEET	23 OF

BALCONY GUARD:

RESIDENTIAL LOAD
200 lL AT 42" ABV. F.F.
CLOSED BALUSTRADE SUCH THAT A SPHERE 4"ø AND LARGER CAN NOT PASS THROUGH

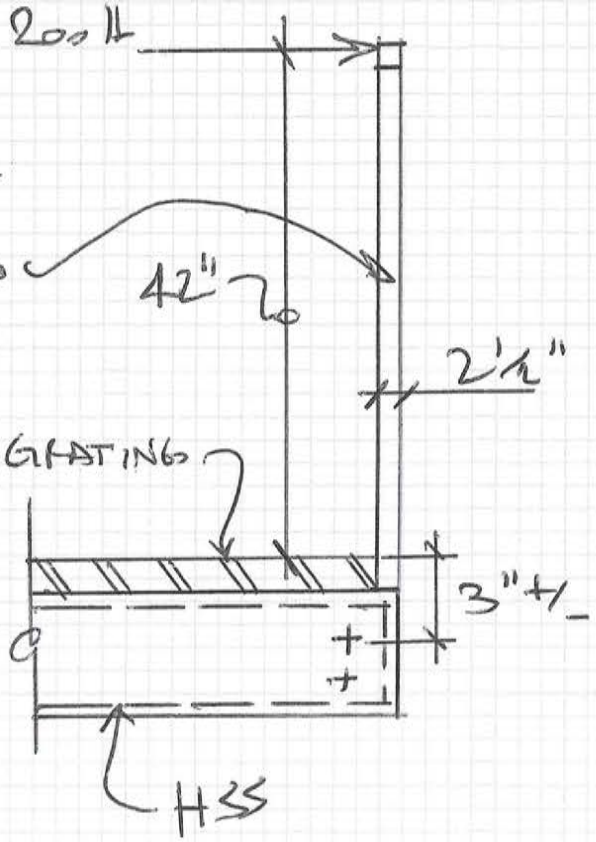

$V = 200\ lb$

$M = 200 \times 45'' = 9000\ IN\text{-}lL$

TRY C1010 STEEL - $F_y = 16{,}000\ PSI$

$S_{REQ'D} = 9000/16{,}000 = 0.536\ IN^3$

USE TS 2½ x 1½ C1010 MECH. WELDED TUBING - WELD OR BOLT TO HSS
$S = 0.593\ IN^3$ AT 11 Ga

4425 CANOGA AVENUE WOODLAND HILLS CA 91364
PHONE (818) 347-7008 FAX (818) 883-8869
Info@RichmondHoffmayer.com

RICHMOND HOFFMAYER INC.
STRUCTURAL ENGINEERING

PROJECT	VILLAGE NEST	JOB	2017-0610
CLIENT	-		
ADDRESS	EDEN, UT		
DESIGN	HUUM		
ENGINEER	J.H.	DATE	6/14/2017
	RICHMOND PE 44628 HOFFMAYER SE 3935	SHEET	23 OF

BOLT TO HSS 8 x 4 x 3/8 BEAMS

$F_B = 200/2 \pm 9000/4 =$

$= 100 \pm 2250$

$= 2350$ lb

& 2150 lb

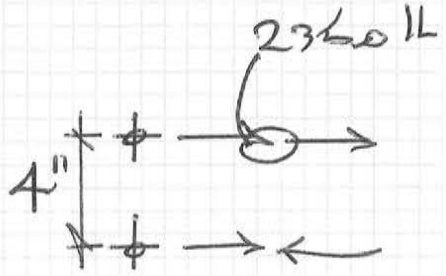

DBL SHEAR 5/8" ϕ M.B. A307

$r_n/\Omega_v = 7.36$ k/BOLT >> 2.35 k ✓

WELD:

$l = 4"$

$e_x = al = 4.5"$

$a \geq 4.5/4 = 11.25$

$k = 0$

$C = 0.439 \rightarrow$ AISC TA. 8-4

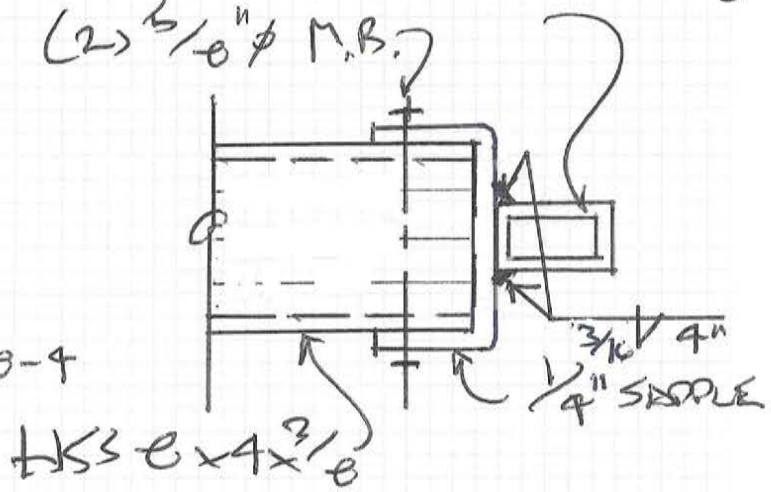

$D_{MIN} = \frac{2(0.2k)}{0.439(1)4} = 0.23$

PLAN
NTS.

USE 1/4" SADDLE
w/ (2) 5/8" ϕ MB. @ 4" c.c.
& 3/16" x 4" MIN FILLETS to TS

4425 CANOGA AVENUE WOODLAND HILLS CA 91364
PHONE (818) 347-7008 FAX (818) 883-8869
Info@RichmondHoffmayer.com

RICHMOND HOFFMAYER INC.
STRUCTURAL ENGINEERING

PROJECT	VILLAGE NEST	JOB	2017-0610
CLIENT	-		
ADDRESS	EDEN, UT		
DESIGN	HUUM		
ENGINEER	J.H.	DATE	6/14/2017
	RICHMOND PE 44628 HOFFMAYER SE 3455	SHEET	232 OF

B3 & B4 TO B5 → FELDSPAR UVN

PER AISC TABLE 10-9a

(2) 3/4" ϕ A325 BOLTS

3/8" PL - N THREADS

CAP = 21.2 k ✓

L = 5" MIN O.K.

$W_{WELD} = \frac{5}{8}\left(\frac{3}{8}\right)$

$= 0.23 \approx \frac{1}{4}"$

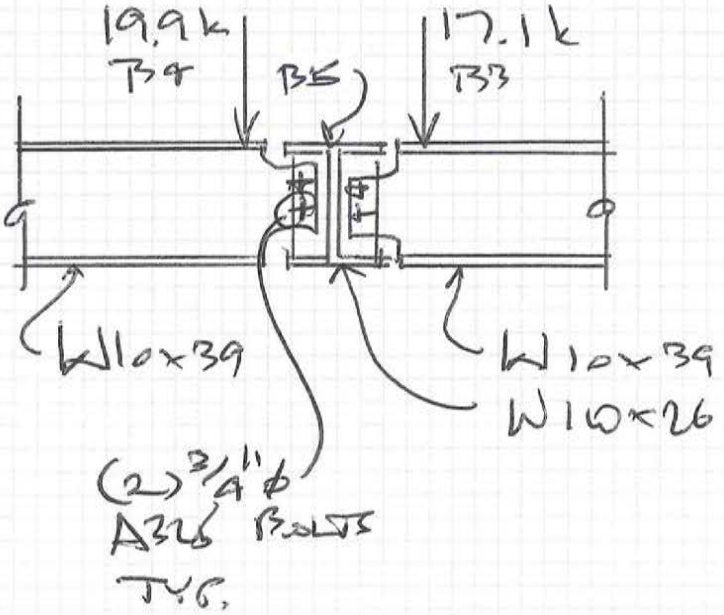

RIDGE TO P.L.

CAP PL = 8" WIDE x 10 1/2" LONG x 5/8" THK.

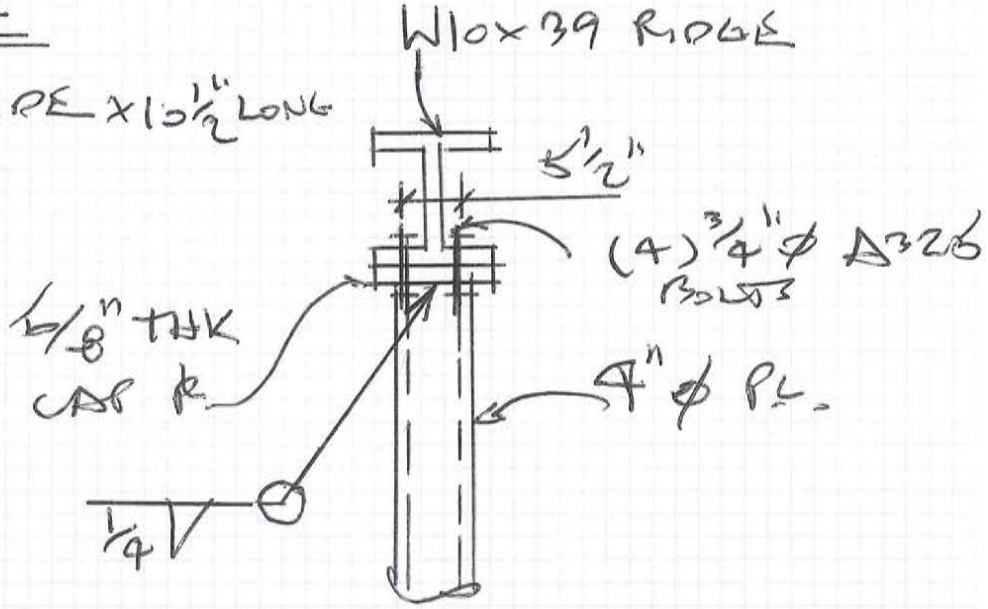

4425 CANOGA AVENUE WOODLAND HILLS CA 91364
PHONE (818) 347-7008 FAX (818) 883-8869
Info@RichmondHoffmayer.com

RICHMOND HOFFMAYER INC.
STRUCTURAL ENGINEERING

Project Title: VILLAGE NEST
Engineer: JJH
Project Descr: MULTI UNIT PROJECT

Project ID: 2017-0610
233

Printed: 10 JUL 2017, 1:27PM

Steel Base Plate

File = d:\ENERCALC Projects\2017-0610.ec6
ENERCALC, INC. 1983-2017, Build:10.17.6.29, Ver:10.17.6.29
Lic. # : KW-06002886 Licensee : RICHMOND HOFFMAYER

Description : P.C. BASE PLATE RIDGE SUPPORT - MAX

Code References

Calculations per AISC Design Guide # 1, IBC 2015, CBC 2016, ASCE 7-10
Load Combination Set : ASCE 7-10

General Information

Material Properties

AISC Design Method	Load Resistance Factor Design	Φ c : LRFD Resistance Factor	0.60
Steel Plate Fy	= 36.0 ksi		
Concrete Support f'c	= 2.50 ksi		
Assumed Bearing Area :	Full Bearing	Allowable Bearing Fp per J8	4.250 ksi

Column & Plate

Column Properties

Steel Section : Pipe4STD

Depth	4.5 in	Area	2.96 in^2
Width	4.5 in	Ixx	6.82 in^4
Flange Thickness	0.221 in	Iyy	6.82 in^4
Web Thickness	0 in		

Plate Dimensions

N : Length	10.50 in
B : Width	10.50 in
Thickness	0.750 in

Column assumed welded to base plate.

Support Dimensions

Width along "X"	24.0 in
Length along "Z"	24.0 in

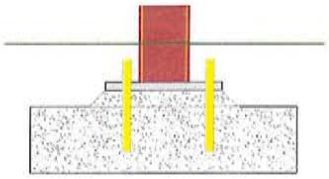

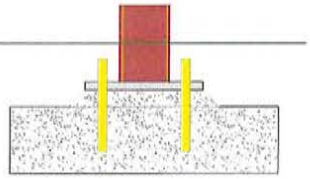

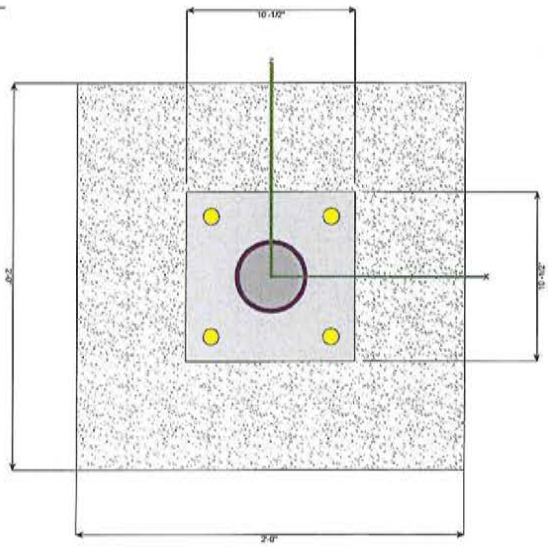

Applied Loads

	P-Y	V-Z	M-X
D : Dead Load	3.807 k	k	k-ft
L : Live	k	k	k-ft
Lr : Roof Live	4.015 k	k	k-ft
S : Snow	49.381 k	k	k-ft
W : Wind	k	k	k-ft
E : Earthquake	k	k	k-ft
H : Lateral Earth	k	k	k-ft

" P " = Gravity load, "+" sign is downward.
"+" Moments create higher soil pressure at +Z edge.
"+" Shears push plate towards +Z edge.

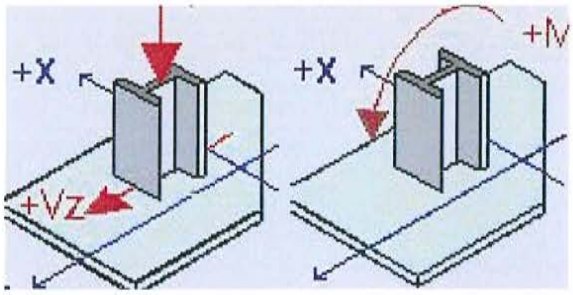

GOVERNING DESIGN LOAD CASE SUMMARY

Plate Design Summary

Design Method	Load Resistance Factor Design
Governing Load Combination	+1.20D+1.60S
Governing Load Case Type	Axial Load Only
Design Plate Size	**10 -1/2" x 10 -1/2" x 0 -3/4"**
Pu : Axial	83.578 k
Mu : Moment	0.000 k-ft

Mu : Max. Moment	4.512 k-in
fb : Max. Bending Stress	32.082 ksi
Fb : Allowable : Fy * Phi	32.400 ksi
Bending Stress Ratio	0.990
	Bending Stress OK
fu : Max. Plate Bearing Stress	0.758 ksi
Fp : Allowable : min(0.85*f'c*sqrt(A2/A1), 1.7* f'c)*Phi	2.550 ksi
Bearing Stress Ratio	0.297
	Bearing Stress OK

RICHMOND HOFFMAYER INC.
STRUCTURAL ENGINEERING

Project Title: VILLAGE NEST
Engineer: JJH
Project Descr: MULTI UNIT PROJECT

Project ID: 2017-0610

234

Printed: 10 JUL 2017, 1:46PM

Steel Base Plate

File = d:\ENERCALC Projects\2017-0610.ec6
ENERCALC, INC. 1983-2017, Build:10.17.6.29, Ver:10.17.6.29

Lic. # : KW-06002886 — Licensee : RICHMOND HOFFMAYER

Description : HSS BASE PLATE

Code References

Calculations per AISC Design Guide # 1, IBC 2015, CBC 2016, ASCE 7-10
Load Combination Set : ASCE 7-10

General Information

Material Properties

AISC Design Method	Load Resistance Factor Design	Φ c : LRFD Resistance Factor	0.60
Steel Plate Fy	= 36.0 ksi		
Concrete Support f'c	= 2.50 ksi		
Assumed Bearing Area :	Full Bearing	Allowable Bearing Fp per J8	4.250 ksi

Column & Plate

Column Properties

Steel Section : HSS6x6x3/8

Depth	6 in	Area	7.58 in^2
Width	6 in	Ixx	39.5 in^4
Flange Thickness	0.349 in	Iyy	39.5 in^4
Web Thickness	in		

Plate Dimensions

N : Length	12.0 in
B : Width	12.0 in
Thickness	0.8750 in

Column assumed welded to base plate.

Support Dimensions

Width along "X"	24.0 in
Length along "Z'	24.0 in

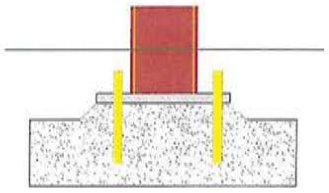

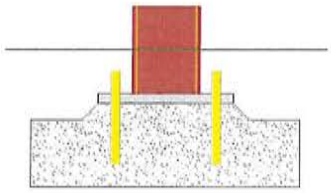

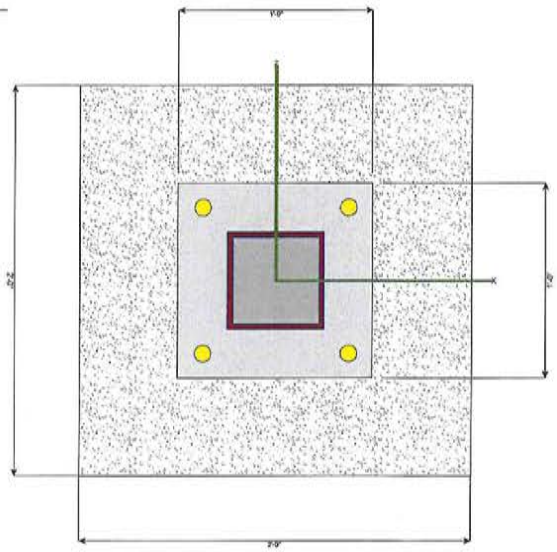

Applied Loads

	P-Y	V-Z	M-X
D : Dead Load	9.050 k	k	k-ft
L : Live	7.440 k	k	k-ft
Lr : Roof Live	4.028 k	k	k-ft
S : Snow	90.670 k	k	k-ft
W : Wind	k	k	k-ft
E : Earthquake	k	k	k-ft
H : Lateral Earth	k	k	k-ft

" P " = Gravity load, "+" sign is downward.
"+" Moments create higher soil pressure at +Z edge.
"+" Shears push plate towards +Z edge.

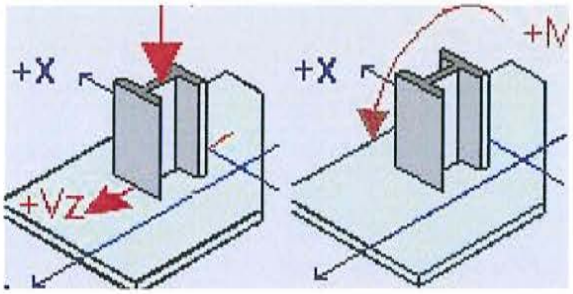

GOVERNING DESIGN LOAD CASE SUMMARY

Plate Design Summary

Design Method	Load Resistance Factor Design
Governing Load Combination	+1.20D+0.50L+1.60S
Governing Load Case Type	Axial Load Only
Design Plate Size	**1'-0" x 1'-0" x 0 -7/8"**
Pu : Axial	159.652 k
Mu : Moment	0.000 k-ft

Mu : Max. Moment	5.501 k-in
fb : Max. Bending Stress	28.737 ksi
Fb : Allowable : Fy * Phi	32.400 ksi
Bending Stress Ratio	0.887
	Bending Stress OK
fu : Max. Plate Bearing Stress	1.109 ksi
Fp : Allowable : min(0.85*f'c*sqrt(A2/A1), 1.7* f'c)*Phi	2.550 ksi
Bearing Stress Ratio	0.435
	Bearing Stress OK

RICHMOND HOFFMAYER INC.
STRUCTURAL ENGINEERING

PROJECT	FELDSPAR LOWER	JOB	2017-0610
CLIENT	VILLAGE NEST		
ADDRESS	EDEN, UTAH		
DESIGN	HUUM		
ENGINEER	J.H.	DATE	6/16/2017
	RICHMOND PE 49628 HOFFMAYER SE 3935	SHEET	23 OF

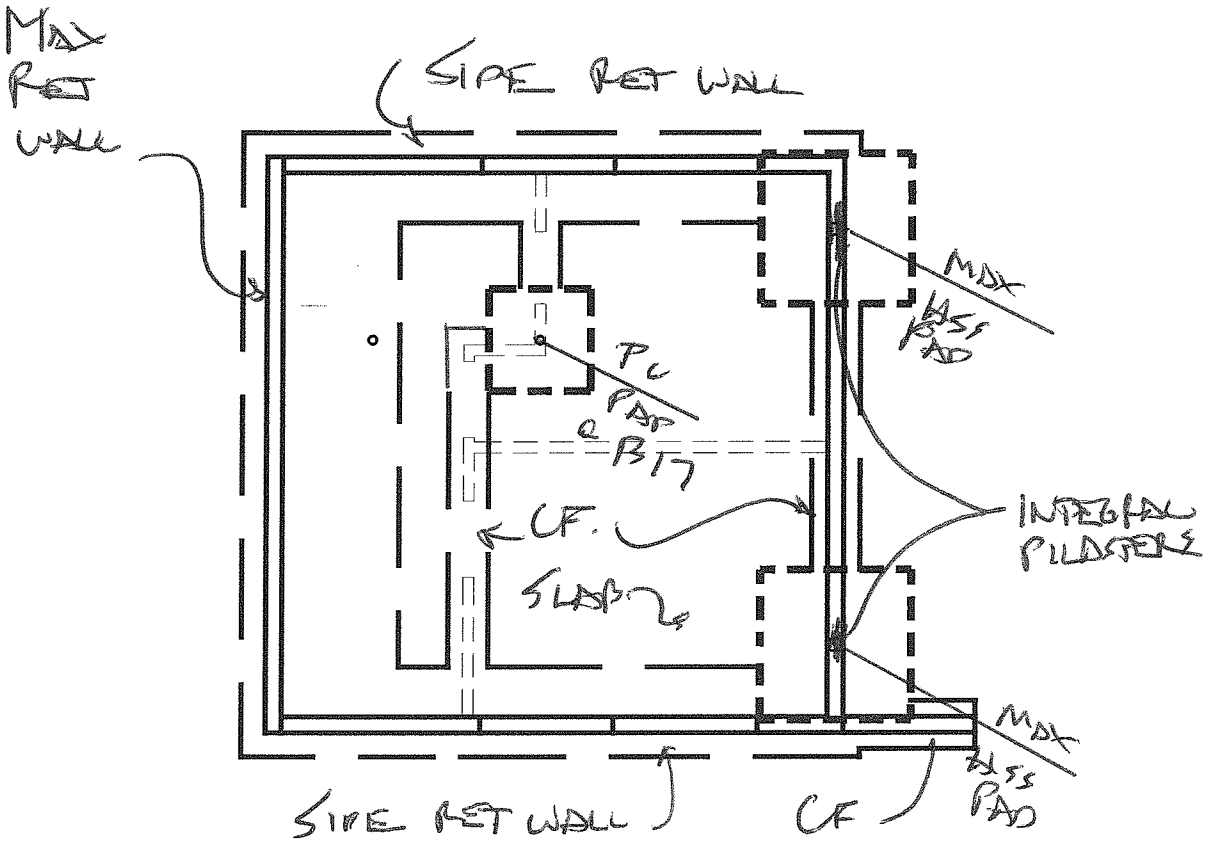

FELDSPAR LVN

FOUNDATION PLAN

FELDSPAR LVN
N.T.S.

4425 CANOGA AVENUE WOODLAND HILLS CA 91364
PHONE (818) 347-7008 FAX (818) 883-8869
Info@RichmondHoffmayer.com

RICHMOND HOFFMAYER INC.
STRUCTURAL ENGINEERING

PROJECT	FELDSPAR LOWER	JOB	2017-0610
CLIENT	VILLAGE NEST		
ADDRESS	EDEN, UTAH		
DESIGN	HUUM		
ENGINEER	J.H.	DATE	6/16/2017
	RICHMOND PE 49628 HOFFMAYER SE 3935	SHEET	236 OF

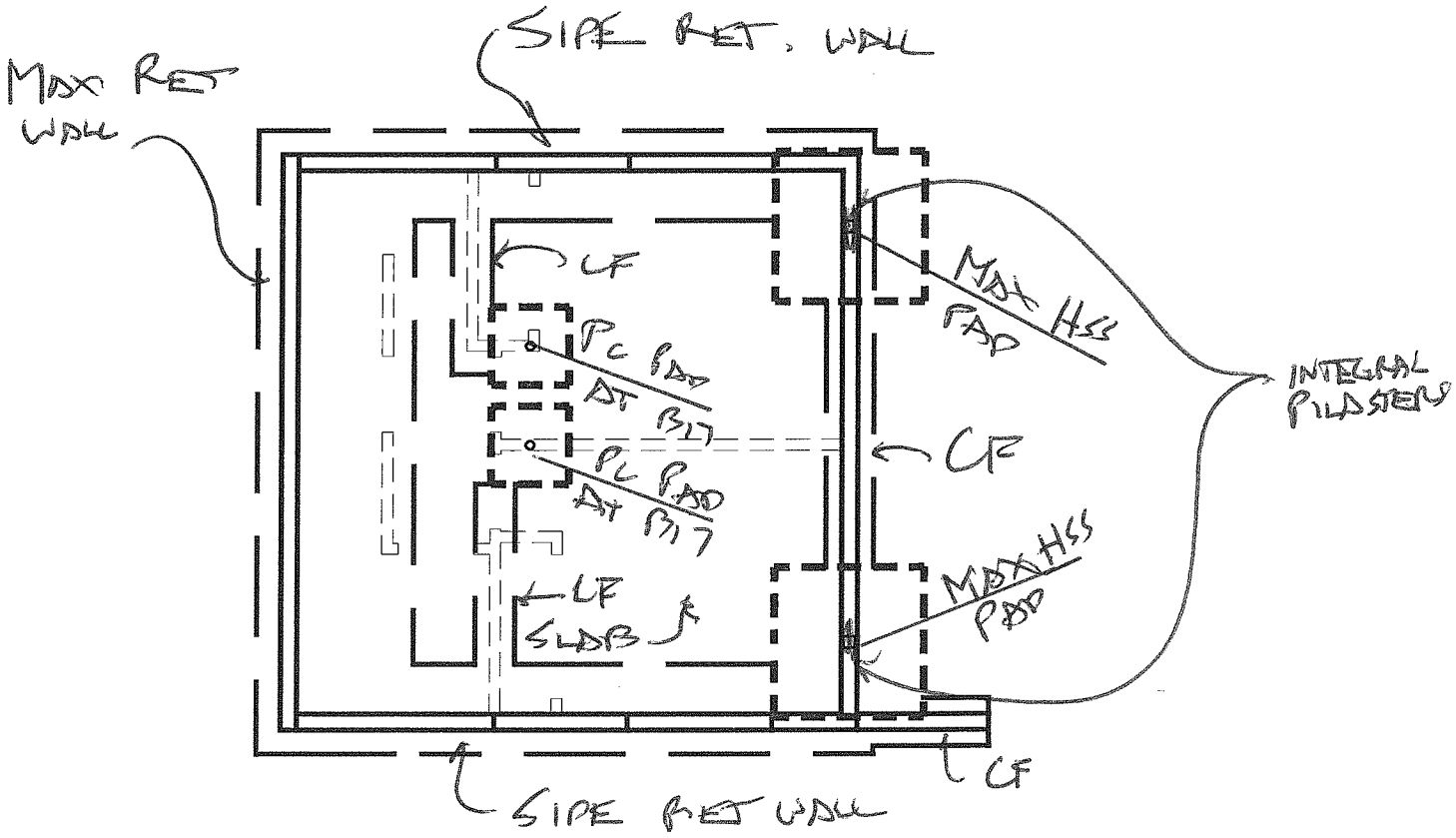

QUARTZ LVN

FOUNDATION PLAN
QUARTZ LVN
N.T.S.

4425 CANOGA AVENUE WOODLAND HILLS CA 91364
PHONE (818) 347-7008 FAX (818) 883-8869
Info@RichmondHoffmayer.com

RICHMOND HOFFMAYER INC.
STRUCTURAL ENGINEERING

PROJECT	VILLAGE NEST	JOB	2017-0610
CLIENT	-		
ADDRESS	EDEN, UT		
DESIGN	HUUM		
ENGINEER	J.H.	DATE	6/14/2017
	RICHMOND PE 44628 HOFFMAYER SE 3455	SHEET	39 OF

SOILS REPORT:

IGES 01628-003 NOV. 9, 2012
01628-015 DEC. 1, 2016

OVER EXCAVATE 24" BELOW FOOTING BOTTOM

FOOTINGS ON 24" STRUCTURAL FILL

Q_{ALLOW} = 2500 PSF BEARING CAPACITY

RECOMMENDED 42" BELOW LOWEST ADJACENT GRADE FOR FROST

MIN FOOTING = 20"

MAX FOOTING = 5' CONTINUOUS & 7' SQUARE

μ = 0.45 FRICTION

EFP = 40PCF LEVEL & 64 PCF 2:1

PASSIVE = 360 PCF

PASSIVE REDUCED BY 1/2 WHEN USED WITH FRICTION

MIN. 5" SLAB W/ #4 @ 16" O.C. EACH WAY OVER 10 MIL VAPOR BARRIER ON GRAVEL ON APPROVED GRADE.

4425 CANOGA AVENUE WOODLAND HILLS CA 91364
PHONE (818) 347-7008 FAX (818) 883-8869
Info@RichmondHoffmayer.com

RICHMOND HOFFMAYER INC.
STRUCTURAL ENGINEERING

PROJECT	VILLAGE NEST	JOB	2017-0610
CLIENT	-		
ADDRESS	EDEN, UT		
DESIGN	HUUM		
ENGINEER	J.H.	DATE	6/14/2017
	RICHMOND PE 44628 HOFFMAYER SE 3435	SHEET	140 OF

CONTINUOUS FOOTINGS:

MAX LOAD = (15.6 + 20 + 26.4) 15'/2 ROOF
+ 15.2 x 20' HALLS
+ (14.3 + 40) 1.33 2ND FLOOR
W = 2625 PLF

20" WIDE x 42" BELOW GRADE
W_{CAP} = 2500 PSF x 20/12 = 4167 PLF ✓

USE 20" WIDE x 42" BELOW GRADE CONTINUOUS FOOTINGS W/ #4 EACH WAY @ 24" OC. - TYP.

4425 CANOGA AVENUE WOODLAND HILLS CA 91364
PHONE (818) 347-7008 FAX (818) 883-8869
Info@RichmondHoffmayer.com

RICHMOND HOFFMAYER INC.
STRUCTURAL ENGINEERING

Project Title: VILLAGE NEST
Engineer: JJH
Project Descr: MULTI UNIT PROJECT

Project ID: 2017-0610

24

Printed: 11 JUL 2017, 3:33PM

Cantilevered Retaining Wall

File = d:\ENERCALC Projects\2017-0610.ec6
ENERCALC, INC. 1983-2017, Build:10.17.6.29, Ver:10.17.6.29
Lic. # : KW-06002886 Licensee : RICHMOND HOFFMAYER

Description : MAX RETAINING WALL - FELDSPAR & QUARTZ LVN

Calculations per ACI 318-14, ACI 530-11, IBC 2015, CBC 2016, ASCE 7-10

Criteria

Retained Height	=	9.00 ft
Wall height above soil	=	1.00 ft
Slope Behind Wall	=	2.00 : 1
Height of Soil over Toe	=	30.00 in
Water height over heel	=	0.0 ft
Vertical component of active Lateral soil pressure options:		
USED for Soil Pressure.		
USED for Sliding Resistance.		
USED for Overturning Resistance.		

Soil Data

Allow Soil Bearing	=	2,500.0 psf
Equivalent Fluid Pressure Method		
Heel Active Pressure	=	64.0 psf/ft
Toe Active Pressure	=	40.0 psf/ft
Passive Pressure	=	360.0 psf/ft
Soil Density, Heel	=	110.00 pcf
Soil Density, Toe	=	110.00 pcf
Friction Coeff btwn Ftg & Soil	=	0.450
Soil height to ignore for passive pressure	=	0.00 in

Surcharge Loads

Surcharge Over Heel	=	0.0 psf
NOT Used To Resist Sliding & Overturning		
Surcharge Over Toe	=	0.0 psf
NOT Used for Sliding & Overturning		

Lateral Load Applied to Stem

Lateral Load	=	0.0 plf
...Height to Top	=	0.00 ft
...Height to Bottom	=	0.00 ft
Wind on Exposed Stem	=	0.0 psf

Adjacent Footing Load

Adjacent Footing Load	=	0.0 lbs
Footing Width	=	0.00 ft
Eccentricity	=	0.00 in
Wall to Ftg CL Dist	=	0.00 ft
Footing Type		Line Load
Base Above/Below Soil at Back of Wall	=	0.0 ft
Poisson's Ratio	=	0.300

Axial Load Applied to Stem

Axial Dead Load	=	600.0 lbs
Axial Live Load	=	2,000.0 lbs
Axial Load Eccentricity	=	0.0 in

Design Summary

Wall Stability Ratios

Overturning	=	2.73 OK
Sliding	=	1.49 Ratio < 1.5!
Total Bearing Load	=	8,913 lbs
...resultant ecc.	=	3.18 in
Soil Pressure @ Toe	=	1,036 psf OK
Soil Pressure @ Heel	=	1,706 psf OK
Allowable	=	2,500 psf
Soil Pressure Less Than Allowable		
ACI Factored @ Toe	=	1,089 psf
ACI Factored @ Heel	=	1,792 psf
Footing Shear @ Toe	=	27.2 psi OK
Footing Shear @ Heel	=	21.8 psi OK
Allowable	=	75.0 psi

Sliding Calcs (Vertical Component Used)

Lateral Sliding Force	=	3,311.1 lbs
less 50 % Passive Force	= -	1,822.5 lbs
less 100% Friction Force	= -	3,110.0 lbs
Added Force Req'd	=	0.0 lbs OK
....for 1.5 : 1 Stability	=	33.0 lbs NG

Load Factors

Dead Load	1.200
Live Load	1.600
Earth, H	1.600
Wind, W	1.600
Seismic, E	1.000

Stem Construction

		Top Stem	2nd
		Stem OK	Stem OK
Design Height Above Ftg	ft =	4.00	0.00
Wall Material Above "Ht"	=	Concrete	Concrete
Thickness	in =	8.00	8.00
Rebar Size	=	# 5	# 5
Rebar Spacing	in =	12.00	6.00
Rebar Placed at	=	Edge	Edge
Design Data			
fb/FB + fa/Fa	=	**0.263**	**0.806**
Total Force @ Section	lbs =	1,280.0	3,947.2
Moment....Actual	ft-l =	2,133.3	12,274.9
Moment.....Allowable	ft-l =	8,121.3	15,222.0
Shear.....Actual	psi =	17.2	53.2
Shear.....Allowable	psi =	75.0	75.0
Wall Weight	psf =	100.0	100.0
Rebar Depth 'd'	in =	6.19	6.19
Lap splice if above	in =	23.40	23.40
Lap splice if below	in =	23.40	4.94
Hook embed into footing	in =	23.40	4.94
Concrete Data			
f'c	psi =	2,500.0	2,500.0
Fy	psi =	60,000.0	60,000.0

RICHMOND HOFFMAYER INC.
STRUCTURAL ENGINEERING

Project Title: VILLAGE NEST
Engineer: JJH
Project Descr: MULTI UNIT PROJECT

Project ID: 2017-0610
242

Printed: 11 JUL 2017, 3:33PM

Cantilevered Retaining Wall

File = d:\ENERCALC Projects\2017-0610.ec6
ENERCALC, INC. 1983-2017, Build:10.17.6.29, Ver:10.17.6.29
Lic. # : KW-06002886 Licensee : RICHMOND HOFFMAYER

Description : MAX RETAINING WALL - FELDSPAR & QUARTZ LVN

Footing Dimensions & Strengths

Toe Width	=	4.75 ft
Heel Width	=	1.75
Total Footing Width	=	6.50
Footing Thickness	=	12.00 in
Key Width	=	12.00 in
Key Depth	=	12.00 in
Key Distance from Toe	=	5.00 ft

f'c = 2,500 psi Fy = 60,000 psi
Footing Concrete Density = 150.00 pcf
Min. As % = 0.0018
Cover @ Top 2.00 @ Btm.= 3.00 in

Footing Design Results

		Toe	Heel
Factored Pressure	=	1,089	1,792 psf
Mu' : Upward	=	14,214	1,184 ft-lb
Mu' : Downward	=	5,753	3,912 ft-lb
Mu: Design	=	8,461	2,727 ft-lb
Actual 1-Way Shear	=	27.24	21.81 psi
Allow 1-Way Shear	=	75.00	75.00 psi

Toe Reinforcing = # 5 @ 8.00 in
Heel Reinforcing = None Spec'd
Key Reinforcing = None Spec'd

Other Acceptable Sizes & Spacings

Toe: #4@ 8.00 in, #5@ 12.25 in, #6@ 17.50 in, #7@ 23.75 in, #8@ 31.25 in, #9@ 39
Heel: #4@ 11.75 in, #5@ 18.25 in, #6@ 25.75 in, #7@ 35.25 in, #8@ 46.25 in, #9@ 4
Key: #4@ 12.50 in, #5@ 19.25 in, #6@ 27.25 in, #7@ 37.25 in,

Summary of Overturning & Resisting Forces & Moments

Item		.....OVERTURNING..... Force lbs	Distance ft	Moment ft-lb		.....RESISTING..... Force lbs	Distance ft	Moment ft-lb
Heel Active Pressure	=	3,556.1	3.51	12,495.6	Soil Over Heel	= 1,072.5	5.96	6,390.3
Surcharge over Heel	=				Sloped Soil Over Heel	= 32.3	6.14	198.1
Toe Active Pressure	=	-245.0	1.17	-285.8	Surcharge Over Heel	=		
Surcharge Over Toe	=				Adjacent Footing Load	=		
Adjacent Footing Load	=				Axial Dead Load on Stem	= 600.0	5.08	3,050.0
Added Lateral Load	=				* Axial Live Load on Stem	= 2,000.0	5.08	10,166.7
Load @ Stem Above Soil	=				Soil Over Toe	= 1,306.3	2.38	3,102.3
					Surcharge Over Toe	=		
					Stem Weight(s)	= 1,000.0	5.08	5,083.3
					Earth @ Stem Transitions	=		
Total	=	3,311.1	**O.T.M.** =	12,209.8	Footing Weight	= 975.0	3.25	3,168.8
					Key Weight	= 150.0	5.50	825.0
					Vert. Component	= 1,777.4	6.50	11,553.2
					Total =	6,913.4 lbs	**R.M. =**	33,371.1

Resisting/Overturning Ratio = **2.73**
Vertical Loads used for Soil Pressure = 8,913.4 lbs

Vertical component of active pressure used for soil pressure

* Axial live load NOT included in total displayed, or used for overturning resistance, but is included for soil pressure calculation.

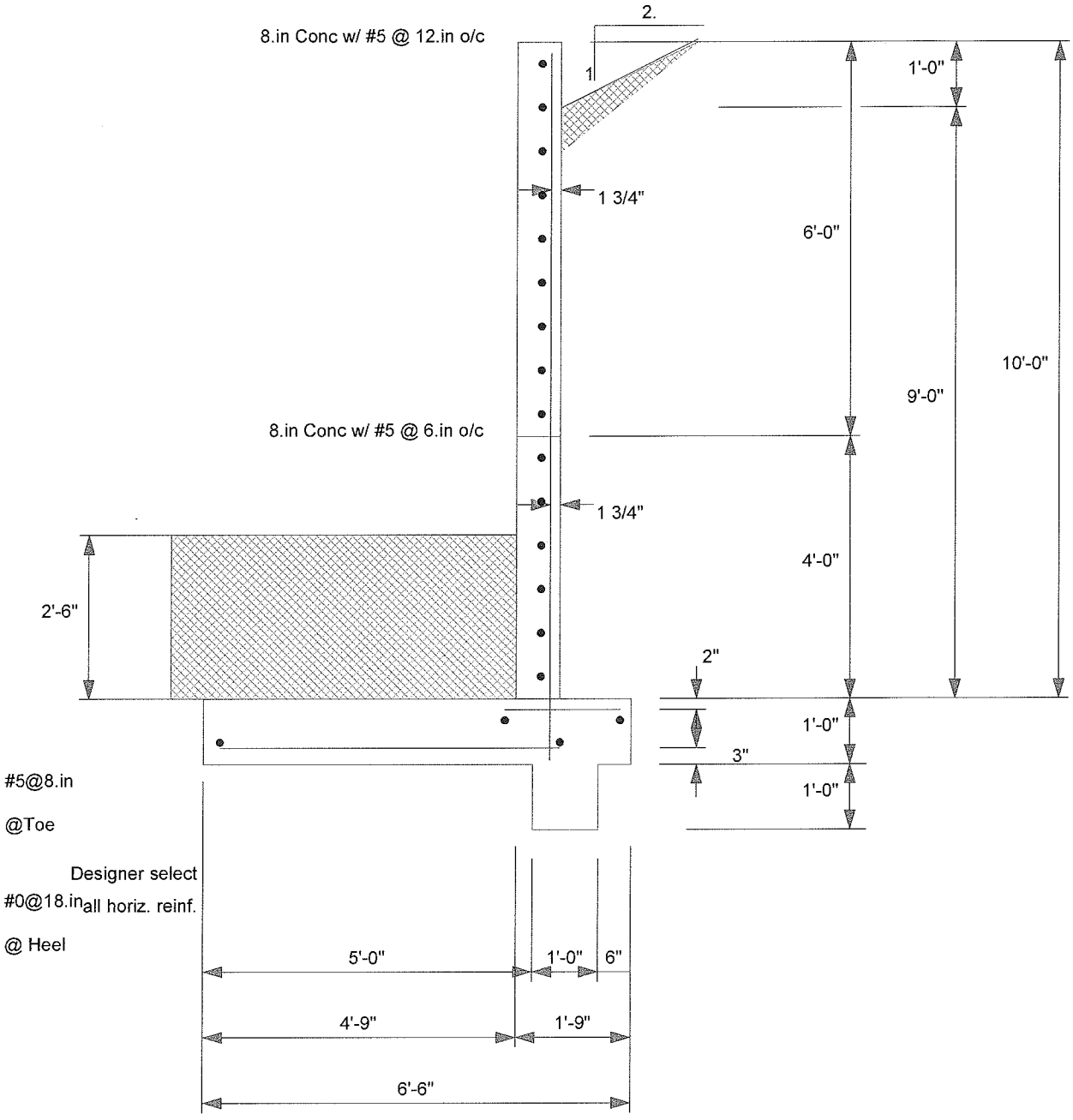
8.in Conc w/ #5 @ 12.in o/c
2.
1
1'-0"
1 3/4"
6'-0"
10'-0"
9'-0"
8.in Conc w/ #5 @ 6.in o/c
1 3/4"
4'-0"
2'-6"
2"
1'-0"
3"
1'-0"
#5@8.in
@Toe
Designer select
#0@18.in all horiz. reinf.
@ Heel
5'-0"
1'-0"
6"
4'-9"
1'-9"
6'-6"

RICHMOND HOFFMAYER INC.
STRUCTURAL ENGINEERING

Project Title: VILLAGE NEST
Engineer: JJH
Project Descr: MULTI UNIT PROJECT

Project ID: 2017-0610

244

Printed: 11 JUL 2017, 3:32PM

Cantilevered Retaining Wall

File = d:\ENERCALC Projects\2017-0610.ec6
ENERCALC, INC. 1983-2017, Build:10.17.6.29, Ver:10.17.6.29
Lic. # : KW-06002886 Licensee : RICHMOND HOFFMAYER

Description : MAX RETAINING WALL - FELDSPAR UVN

Calculations per ACI 318-14, ACI 530-11, IBC 2015, CBC 2016, ASCE 7-10

Criteria

Retained Height	=	9.00 ft
Wall height above soil	=	0.00 ft
Slope Behind Wall	=	0.00 : 1
Height of Soil over Toe	=	30.00 in
Water height over heel	=	0.0 ft
Vertical component of active Lateral soil pressure options:		
USED for Soil Pressure.		
USED for Sliding Resistance.		
USED for Overturning Resistance.		

Soil Data

Allow Soil Bearing	=	2,500.0 psf
Equivalent Fluid Pressure Method		
Heel Active Pressure	=	40.0 psf/ft
Toe Active Pressure	=	40.0 psf/ft
Passive Pressure	=	360.0 psf/ft
Soil Density, Heel	=	110.00 pcf
Soil Density, Toe	=	110.00 pcf
Friction Coeff btwn Ftg & Soil	=	0.450
Soil height to ignore for passive pressure	=	0.00 in

Surcharge Loads

Surcharge Over Heel	=	100.0 psf
Used To Resist Sliding & Overturning		
Surcharge Over Toe	=	0.0 psf
NOT Used for Sliding & Overturning		

Lateral Load Applied to Stem

Lateral Load	=	0.0 plf
...Height to Top	=	0.00 ft
...Height to Bottom	=	0.00 ft
Wind on Exposed Stem	=	0.0 psf

Adjacent Footing Load

Adjacent Footing Load	=	0.0 lbs
Footing Width	=	0.00 ft
Eccentricity	=	0.00 in
Wall to Ftg CL Dist	=	0.00 ft
Footing Type		Line Load
Base Above/Below Soil at Back of Wall	=	0.0 ft
Poisson's Ratio	=	0.300

Axial Load Applied to Stem

Axial Dead Load	=	200.0 lbs
Axial Live Load	=	200.0 lbs
Axial Load Eccentricity	=	0.0 in

Design Summary

Wall Stability Ratios

Overturning	=	1.59 OK
Sliding	=	1.73 OK
Total Bearing Load	=	4,275 lbs
...resultant ecc.	=	14.35 in
Soil Pressure @ Toe	=	2,185 psf OK
Soil Pressure @ Heel	=	0 psf OK
Allowable	=	2,500 psf
Soil Pressure Less Than Allowable		
ACI Factored @ Toe	=	2,662 psf
ACI Factored @ Heel	=	0 psf
Footing Shear @ Toe	=	29.3 psi OK
Footing Shear @ Heel	=	14.5 psi OK
Allowable	=	75.0 psi

Sliding Calcs (Vertical Component Used)

Lateral Sliding Force	=	2,118.6 lbs
less 50 % Passive Force	= -	1,822.5 lbs
less 100% Friction Force	= -	1,830.6 lbs
Added Force Req'd	=	0.0 lbs OK
....for 1.5 : 1 Stability	=	0.0 lbs OK

Load Factors

Dead Load	1.200
Live Load	1.600
Earth, H	1.600
Wind, W	1.600
Seismic, E	1.000

Stem Construction

		Top Stem	2nd
		Stem OK	Stem OK
Design Height Above Ftg	ft =	4.00	0.00
Wall Material Above "Ht"	=	Concrete	Concrete
Thickness	in =	8.00	8.00
Rebar Size	=	# 5	# 5
Rebar Spacing	in =	12.00	6.00
Rebar Placed at	=	Edge	Edge
Design Data			
fb/FB + fa/Fa	=	**0.254**	**0.655**
Total Force @ Section	lbs =	1,090.9	2,915.6
Moment....Actual	ft-l =	2,060.6	9,965.7
Moment.....Allowable	ft-l =	8,121.3	15,222.0
Shear.....Actual	psi =	14.7	39.3
Shear.....Allowable	psi =	75.0	75.0
Wall Weight	psf =	100.0	100.0
Rebar Depth 'd'	in =	6.19	6.19
Lap splice if above	in =	23.40	23.40
Lap splice if below	in =	23.40	3.93
Hook embed into footing	in =	23.40	3.93
Concrete Data			
f'c	psi =	2,500.0	2,500.0
Fy	psi =	60,000.0	60,000.0

RICHMOND HOFFMAYER INC.
STRUCTURAL ENGINEERING

Project Title: VILLAGE NEST
Engineer: JJH
Project Descr: MULTI UNIT PROJECT

Project ID: 2017-0610
245

Printed: 11 JUL 2017, 3:32PM

Cantilevered Retaining Wall

File = d:\ENERCALC Projects\2017-0610.ec6
ENERCALC, INC. 1983-2017, Build:10.17.6.29, Ver:10.17.6.29
Lic. # : KW-06002886 Licensee : RICHMOND HOFFMAYER

Description : MAX RETAINING WALL - FELDSPAR UVN

Footing Dimensions & Strengths

Toe Width	=	3.25 ft
Heel Width	=	1.75
Total Footing Width	=	5.00
Footing Thickness	=	12.00 in
Key Width	=	12.00 in
Key Depth	=	12.00 in
Key Distance from Toe	=	3.00 ft

f'c = 2,500 psi Fy = 60,000 psi
Footing Concrete Density = 150.00 pcf
Min. As % = 0.0018
Cover @ Top 2.00 @ Btm.= 3.00 in

Footing Design Results

		Toe	Heel
Factored Pressure	=	2,662	0 psf
Mu' : Upward	=	10,168	0 ft-lb
Mu' : Downward	=	2,693	897 ft-lb
Mu: Design	=	7,475	897 ft-lb
Actual 1-Way Shear	=	29.35	14.52 psi
Allow 1-Way Shear	=	75.00	75.00 psi

Toe Reinforcing = # 5 @ 8.00 in
Heel Reinforcing = None Spec'd
Key Reinforcing = None Spec'd

Other Acceptable Sizes & Spacings

Toe: #4@ 9.00 in, #5@ 14.00 in, #6@ 19.75 in, #7@ 27.00 in, #8@ 35.50 in, #9@ 45
Heel: Not req'd, Mu < S * Fr
Key: #4@ 12.50 in, #5@ 19.25 in, #6@ 27.25 in, #7@ 37.25 in,

Summary of Overturning & Resisting Forces & Moments

Item		.....OVERTURNING..... Force lbs	Distance ft	Moment ft-lb		.....RESISTING..... Force lbs	Distance ft	Moment ft-lb
Heel Active Pressure	=	2,000.0	3.33	6,666.7	Soil Over Heel	= 1,072.5	4.46	4,781.6
Surcharge over Heel	=	363.6	5.00	1,818.2	Sloped Soil Over Heel	=		
Toe Active Pressure	=	-245.0	1.17	-285.8	Surcharge Over Heel	= 108.3	4.46	483.0
Surcharge Over Toe	=				Adjacent Footing Load	=		
Adjacent Footing Load	=				Axial Dead Load on Stem	= 200.0	3.58	716.7
Added Lateral Load	=				* Axial Live Load on Stem	= 200.0	3.58	716.7
Load @ Stem Above Soil	=				Soil Over Toe	= 893.8	1.63	1,452.3
					Surcharge Over Toe	=		
					Stem Weight(s)	= 900.0	3.58	3,225.0
					Earth @ Stem Transitions	=		
					Footing Weight	= 750.0	2.50	1,875.0
					Key Weight	= 150.0	3.50	525.0
					Vert. Component	=	5.00	
Total	=	2,118.6	**O.T.M.** =	8,199.0	**Total** =	4,074.6 lbs	**R.M.** =	13,058.6

Resisting/Overturning Ratio = **1.59**
Vertical Loads used for Soil Pressure = 4,274.6 lbs

* Axial live load NOT included in total displayed, or used for overturning resistance, but is included for soil pressure calculation.

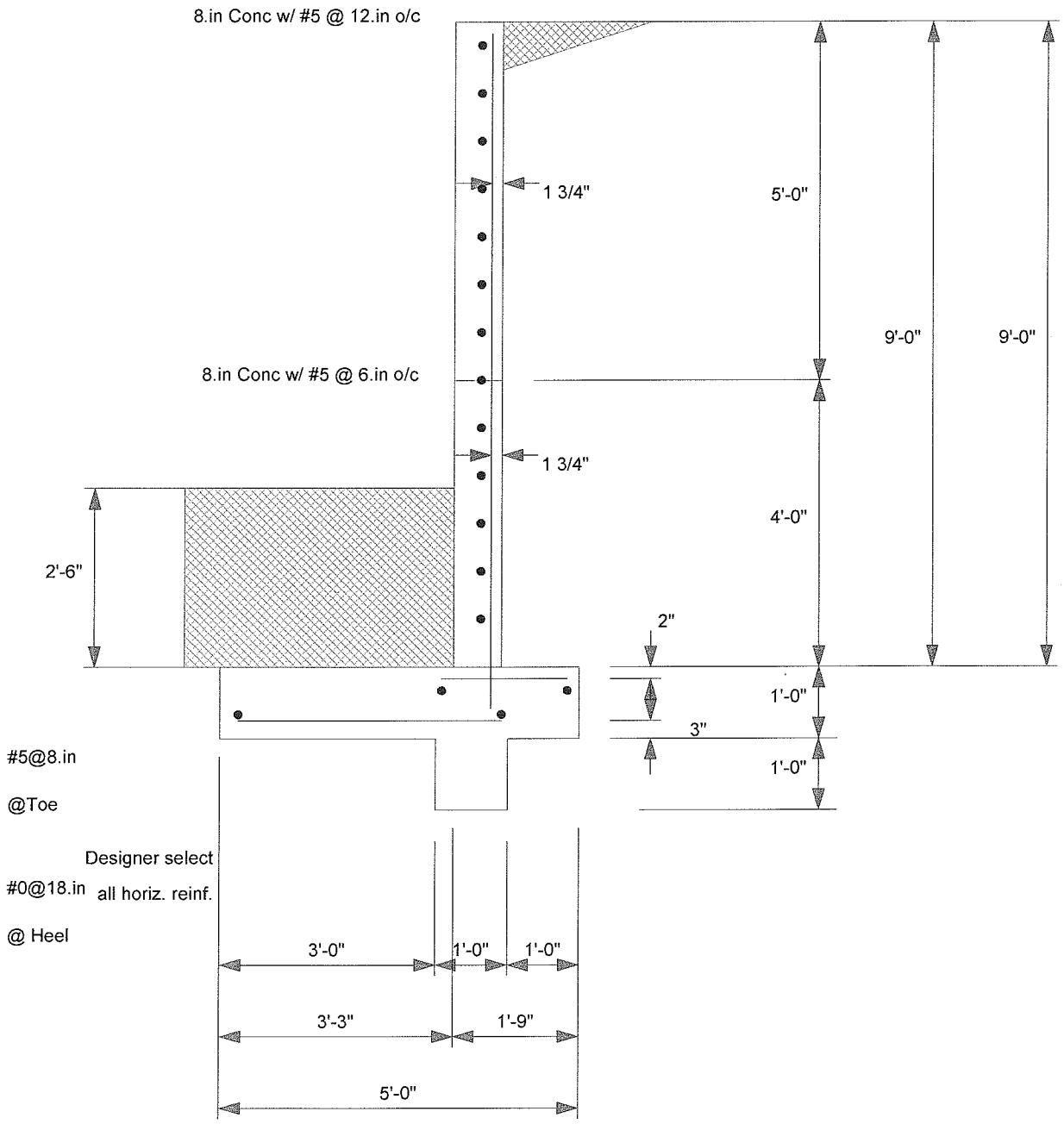
8.in Conc w/ #5 @ 12.in o/c
1 3/4"
5'-0"
9'-0"
9'-0"
8.in Conc w/ #5 @ 6.in o/c
1 3/4"
4'-0"
2'-6"
2"
1'-0"
3"
1'-0"
#5@8.in
@Toe
Designer select
#0@18.in all horiz. reinf.
@ Heel
3'-0"
1'-0"
1'-0"
3'-3"
1'-9"
5'-0"

RICHMOND HOFFMAYER INC.
STRUCTURAL ENGINEERING

Project Title: VILLAGE NEST
Engineer: JJH
Project Descr: MULTI UNIT PROJECT

Project ID: 2017-0610
247

Printed: 11 JUL 2017, 3:31PM

Cantilevered Retaining Wall

File = d:\ENERCALC Projects\2017-0610.ec6
ENERCALC, INC. 1983-2017, Build:10.17.6.29, Ver:10.17.6.29
Lic. # : KW-06002886 Licensee : RICHMOND HOFFMAYER

Description : SIDE RETAINING WALLS - FELDSPAR & QUARTZ LVN & UVN

Calculations per ACI 318-14, ACI 530-11, IBC 2015, CBC 2016, ASCE 7-10

Criteria

Retained Height	=	7.50 ft
Wall height above soil	=	1.00 ft
Slope Behind Wall	=	0.00 : 1
Height of Soil over Toe	=	30.00 in
Water height over heel	=	0.0 ft
Vertical component of active Lateral soil pressure options:		
USED for Soil Pressure.		
USED for Sliding Resistance.		
USED for Overturning Resistance.		

Soil Data

Allow Soil Bearing	=	2,500.0 psf
Equivalent Fluid Pressure Method		
Heel Active Pressure	=	40.0 psf/ft
Toe Active Pressure	=	40.0 psf/ft
Passive Pressure	=	360.0 psf/ft
Soil Density, Heel	=	110.00 pcf
Soil Density, Toe	=	110.00 pcf
Friction Coeff btwn Ftg & Soil	=	0.450
Soil height to ignore for passive pressure	=	0.00 in

Surcharge Loads

Surcharge Over Heel	=	0.0 psf
NOT Used To Resist Sliding & Overturning		
Surcharge Over Toe	=	0.0 psf
NOT Used for Sliding & Overturning		

Lateral Load Applied to Stem

Lateral Load	=	0.0 plf
...Height to Top	=	0.00 ft
...Height to Bottom	=	0.00 ft
Wind on Exposed Stem	=	0.0 psf

Adjacent Footing Load

Adjacent Footing Load	=	0.0 lbs
Footing Width	=	0.00 ft
Eccentricity	=	0.00 in
Wall to Ftg CL Dist	=	0.00 ft
Footing Type		Line Load
Base Above/Below Soil at Back of Wall	=	0.0 ft
Poisson's Ratio	=	0.300

Axial Load Applied to Stem

Axial Dead Load	=	600.0 lbs
Axial Live Load	=	2,000.0 lbs
Axial Load Eccentricity	=	0.0 in

Design Summary

Wall Stability Ratios

Overturning	=	2.06 OK
Sliding	=	2.21 OK
Total Bearing Load	=	5,456 lbs
...resultant ecc.	=	3.34 in
Soil Pressure @ Toe	=	2,102 psf OK
Soil Pressure @ Heel	=	808 psf OK
Allowable	=	2,500 psf
Soil Pressure Less Than Allowable		
ACI Factored @ Toe	=	2,831 psf
ACI Factored @ Heel	=	1,088 psf
Footing Shear @ Toe	=	24.2 psi OK
Footing Shear @ Heel	=	1.6 psi OK
Allowable	=	75.0 psi

Sliding Calcs (Vertical Component Used)

Lateral Sliding Force	=	1,200.0 lbs
less 50 % Passive Force	= -	1,102.5 lbs
less 100% Friction Force	= -	1,556.0 lbs
Added Force Req'd	=	0.0 lbs OK
....for 1.5 : 1 Stability	=	0.0 lbs OK

Load Factors

Dead Load	1.200
Live Load	1.600
Earth, H	1.600
Wind, W	1.600
Seismic, E	1.000

Stem Construction

		Top Stem	2nd
		Stem OK	Stem OK
Design Height Above Ftg	ft =	4.00	0.00
Wall Material Above "Ht"	=	Concrete	Concrete
Thickness	in =	8.00	8.00
Rebar Size	=	# 5	# 5
Rebar Spacing	in =	12.00	12.00
Rebar Placed at	=	Edge	Edge
Design Data			
fb/FB + fa/Fa	=	**0.056**	**0.534**
Total Force @ Section	lbs =	392.0	1,600.0
Moment....Actual	ft-l =	457.3	4,333.3
Moment.....Allowable	ft-l =	8,121.3	8,121.3
Shear.....Actual	psi =	5.3	21.5
Shear.....Allowable	psi =	75.0	75.0
Wall Weight	psf =	100.0	100.0
Rebar Depth 'd'	in =	6.19	6.19
Lap splice if above	in =	23.40	23.40
Lap splice if below	in =	23.40	3.60
Hook embed into footing	in =	23.40	3.60
Concrete Data			
f'c	psi =	2,500.0	2,500.0
Fy	psi =	60,000.0	60,000.0

RICHMOND HOFFMAYER INC.
STRUCTURAL ENGINEERING

Project Title: VILLAGE NEST
Engineer: JJH
Project Descr: MULTI UNIT PROJECT

Project ID: 2017-0610
24c

Printed: 11 JUL 2017, 3:31PM

Cantilevered Retaining Wall

File = d:\ENERCALC Projects\2017-0610.ec6
ENERCALC, INC. 1983-2017, Build:10.17.6.29, Ver:10.17.6.29

Lic. # : KW-06002886 — Licensee : RICHMOND HOFFMAYER

Description : SIDE RETAINING WALLS - FELDSPAR & QUARTZ LVN & UVN

Footing Dimensions & Strengths

Toe Width	=	2.00 ft
Heel Width	=	1.75
Total Footing Width	=	3.75
Footing Thickness	=	12.00 in
Key Width	=	12.00 in
Key Depth	=	0.00 in
Key Distance from Toe	=	1.75 ft

f'c = 2,500 psi Fy = 60,000 psi
Footing Concrete Density = 150.00 pcf
Min. As % = 0.0018
Cover @ Top 2.00 @ Btm.= 3.00 in

Footing Design Results

		Toe	Heel
Factored Pressure	=	2,831	1,088 psf
Mu' : Upward	=	5,042	737 ft-lb
Mu' : Downward	=	1,020	687 ft-lb
Mu: Design	=	4,022	50 ft-lb
Actual 1-Way Shear	=	24.19	1.61 psi
Allow 1-Way Shear	=	75.00	75.00 psi
Toe Reinforcing	=	# 5 @ 8.00 in	
Heel Reinforcing	=	None Spec'd	
Key Reinforcing	=	None Spec'd	

Other Acceptable Sizes & Spacings

Toe: #4@ 13.25 in, #5@ 20.50 in, #6@ 29.00 in, #7@ 39.25 in, #8@ 48.25 in, #9@ 4
Heel: Not req'd, Mu < S * Fr
Key: Not req'd, Mu < S * Fr

Summary of Overturning & Resisting Forces & Moments

Item		.....OVERTURNING..... Force lbs	Distance ft	Moment ft-lb		.....RESISTING..... Force lbs	Distance ft	Moment ft-lb
Heel Active Pressure	=	1,445.0	2.83	4,094.2	Soil Over Heel	= 893.8	3.21	2,867.4
Surcharge over Heel	=				Sloped Soil Over Heel	=		
Toe Active Pressure	=	-245.0	1.17	-285.8	Surcharge Over Heel	=		
Surcharge Over Toe	=				Adjacent Footing Load	=		
Adjacent Footing Load	=				Axial Dead Load on Stem	= 600.0	2.33	1,400.0
Added Lateral Load	=				* Axial Live Load on Stem	= 2,000.0	2.33	4,666.7
Load @ Stem Above Soil	=				Soil Over Toe	= 550.0	1.00	550.0
					Surcharge Over Toe	=		
					Stem Weight(s)	= 850.0	2.33	1,983.3
					Earth @ Stem Transitions	=		
Total	=	1,200.0	**O.T.M.** =	3,808.3	Footing Weight	= 562.5	1.88	1,054.7
					Key Weight	=	2.25	
					Vert. Component	=	3.75	
					Total =	3,456.3 lbs	**R.M. =**	7,855.5

Resisting/Overturning Ratio = **2.06**
Vertical Loads used for Soil Pressure = 5,456.3 lbs

* Axial live load NOT included in total displayed, or used for overturning resistance, but is included for soil pressure calculation.

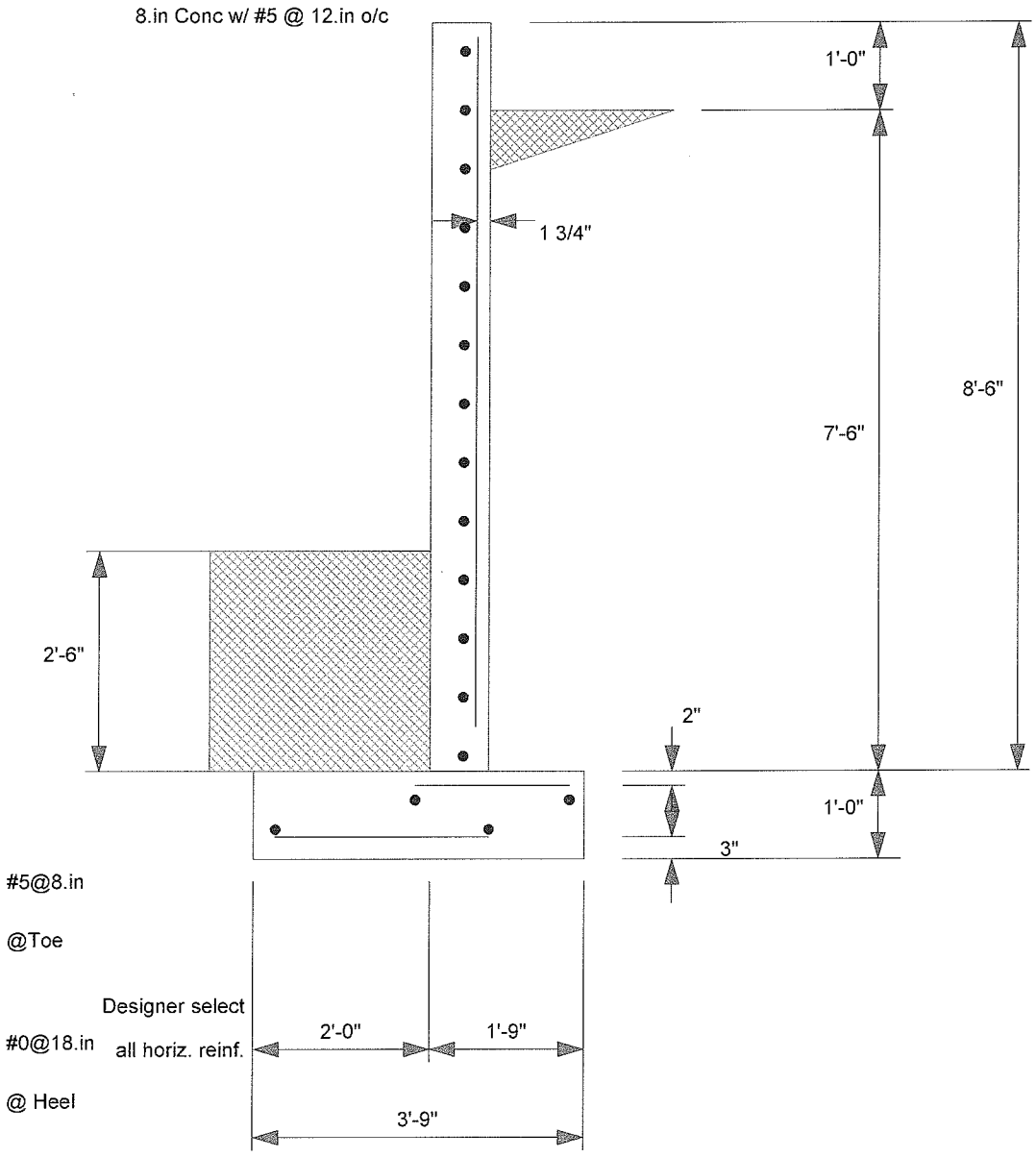
8.in Conc w/ #5 @ 12.in o/c
1'-0"
1 3/4"
8'-6"
7'-6"
2'-6"
2"
1'-0"
3"
#5@8.in
@Toe
Designer select
#0@18.in
all horiz. reinf.
@ Heel
2'-0"
1'-9"
3'-9"

RICHMOND HOFFMAYER INC.
STRUCTURAL ENGINEERING

Project Title: VILLAGE NEST
Engineer: JJH
Project Descr: MULTI UNIT PROJECT

Project ID: 2017-0610

260

Printed: 11 JUL 2017, 3:30PM

Cantilevered Retaining Wall

File = d:\ENERCALC Projects\2017-0610.ec6
ENERCALC, INC. 1983-2017, Build:10.17.6.29, Ver:10.17.6.29
Lic. # : KW-06002886 Licensee : RICHMOND HOFFMAYER

Description : BOTTOM STEM WALLS - FELDSPAR & QUARTZ LVN & UVN

Calculations per ACI 318-14, ACI 530-11, IBC 2015, CBC 2016, ASCE 7-10

Criteria

Retained Height	=	4.00 ft
Wall height above soil	=	2.00 ft
Slope Behind Wall	=	0.00 : 1
Height of Soil over Toe	=	30.00 in
Water height over heel	=	0.0 ft
Vertical component of active Lateral soil pressure options:		
USED for Soil Pressure.		
USED for Sliding Resistance.		
USED for Overturning Resistance.		

Soil Data

Allow Soil Bearing	=	2,500.0 psf
Equivalent Fluid Pressure Method		
Heel Active Pressure	=	40.0 psf/ft
Toe Active Pressure	=	40.0 psf/ft
Passive Pressure	=	360.0 psf/ft
Soil Density, Heel	=	110.00 pcf
Soil Density, Toe	=	110.00 pcf
Friction Coeff btwn Ftg & Soil	=	0.450
Soil height to ignore for passive pressure	=	0.00 in

Surcharge Loads

Surcharge Over Heel	=	40.0 psf
Used To Resist Sliding & Overturning		
Surcharge Over Toe	=	0.0 psf
NOT Used for Sliding & Overturning		

Lateral Load Applied to Stem

Lateral Load	=	0.0 plf
...Height to Top	=	0.00 ft
...Height to Bottom	=	0.00 ft
Wind on Exposed Stem	=	0.0 psf

Adjacent Footing Load

Adjacent Footing Load	=	0.0 lbs
Footing Width	=	0.00 ft
Eccentricity	=	0.00 in
Wall to Ftg CL Dist	=	0.00 ft
Footing Type		Line Load
Base Above/Below Soil at Back of Wall	=	0.0 ft
Poisson's Ratio	=	0.300

Axial Load Applied to Stem

Axial Dead Load	=	600.0 lbs
Axial Live Load	=	1,000.0 lbs
Axial Load Eccentricity	=	0.0 in

Design Summary

Wall Stability Ratios

Overturning	=	2.88 OK
Sliding	=	6.11 OK
Total Bearing Load	=	3,003 lbs
...resultant ecc.	=	2.52 in
Soil Pressure @ Toe	=	2,449 psf OK
Soil Pressure @ Heel	=	554 psf OK
Allowable	=	2,500 psf
Soil Pressure Less Than Allowable		
ACI Factored @ Toe	=	3,265 psf
ACI Factored @ Heel	=	738 psf
Footing Shear @ Toe	=	0.0 psi OK
Footing Shear @ Heel	=	2.2 psi OK
Allowable	=	75.0 psi

Sliding Calcs (Vertical Component Used)

Lateral Sliding Force	=	327.7 lbs
less 50 % Passive Force	= -	1,102.5 lbs
less 100% Friction Force	= -	900.0 lbs
Added Force Req'd	=	0.0 lbs OK
....for 1.5 : 1 Stability	=	0.0 lbs OK

Load Factors

Dead Load	1.200
Live Load	1.600
Earth, H	1.600
Wind, W	1.600
Seismic, E	1.000

Stem Construction

Top Stem

		Stem OK
Design Height Above Ftg	ft =	0.00
Wall Material Above "Ht"	=	Concrete
Thickness	in =	8.00
Rebar Size	=	# 5
Rebar Spacing	in =	12.00
Rebar Placed at	=	Edge
Design Data		
fb/FB + fa/Fa	=	**0.086**
Total Force @ Section	lbs =	405.1
Moment....Actual	ft-l =	702.2
Moment.....Allowable	ft-l =	8,121.3
Shear.....Actual	psi =	5.5
Shear.....Allowable	psi =	75.0
Wall Weight	psf =	100.0
Rebar Depth 'd'	in =	6.19
Lap splice if above	in =	23.40
Lap splice if below	in =	6.00
Hook embed into footing	in =	6.00
Concrete Data		
f'c	psi =	2,500.0
Fy	psi =	

RICHMOND HOFFMAYER INC.
STRUCTURAL ENGINEERING

Project Title: VILLAGE NEST
Engineer: JJH
Project Descr: MULTI UNIT PROJECT

Project ID: 2017-0610

251

Printed: 11 JUL 2017, 3:30PM

Cantilevered Retaining Wall

File = d:\ENERCALC Projects\2017-0610.ec6
ENERCALC, INC. 1983-2017, Build:10.17.6.29, Ver:10.17.6.29

Lic. # : KW-06002886 — Licensee : RICHMOND HOFFMAYER

Description : BOTTOM STEM WALLS - FELDSPAR & QUARTZ LVN & UVN

Footing Dimensions & Strengths

Toe Width	=	0.67 ft
Heel Width	=	1.33
Total Footing Width	=	2.00
Footing Thickness	=	12.00 in
Key Width	=	12.00 in
Key Depth	=	0.00 in
Key Distance from Toe	=	1.75 ft

f'c = 2,500 psi Fy = 60,000 psi
Footing Concrete Density = 150.00 pcf
Min. As % = 0.0018
Cover @ Top 2.00 @ Btm.= 3.00 in

Footing Design Results

		Toe	Heel
Factored Pressure	=	3,265	738 psf
Mu' : Upward	=	669	224 ft-lb
Mu' : Downward	=	114	170 ft-lb
Mu: Design	=	555	54 ft-lb
Actual 1-Way Shear	=	0.00	2.24 psi
Allow 1-Way Shear	=	75.00	75.00 psi

Toe Reinforcing = # 5 @ 8.00 in
Heel Reinforcing = None Spec'd
Key Reinforcing = None Spec'd

Other Acceptable Sizes & Spacings

Toe: Not req'd, Mu < S * Fr
Heel: Not req'd, Mu < S * Fr
Key: Not req'd, Mu < S * Fr

Summary of Overturning & Resisting Forces & Moments

Item		.....OVERTURNING..... Force lbs	Distance ft	Moment ft-lb		.....RESISTING..... Force lbs	Distance ft	Moment ft-lb
Heel Active Pressure	=	500.0	1.67	833.3	Soil Over Heel	= 291.9	1.67	486.9
Surcharge over Heel	=	72.7	2.50	181.8	Sloped Soil Over Heel	=		
Toe Active Pressure	=	-245.0	1.17	-285.8	Surcharge Over Heel	= 26.5	1.67	44.3
Surcharge Over Toe	=				Adjacent Footing Load	=		
Adjacent Footing Load	=				Axial Dead Load on Stem	= 600.0	1.00	602.0
Added Lateral Load	=				* Axial Live Load on Stem	= 1,000.0	1.00	1,003.3
Load @ Stem Above Soil	=				Soil Over Toe	= 184.3	0.34	61.7
					Surcharge Over Toe	=		
					Stem Weight(s)	= 600.0	1.00	602.0
					Earth @ Stem Transitions	=		
Total	=	327.7	**O.T.M.** =	729.3	Footing Weight	= 300.0	1.00	300.0
					Key Weight	=	2.25	
					Vert. Component	=	2.00	
					Total =	2,002.7 lbs	**R.M. =**	2,096.9

Resisting/Overturning Ratio = **2.88**
Vertical Loads used for Soil Pressure = 3,002.7 lbs

* Axial live load NOT included in total displayed, or used for overturning resistance, but is included for soil pressure calculation.

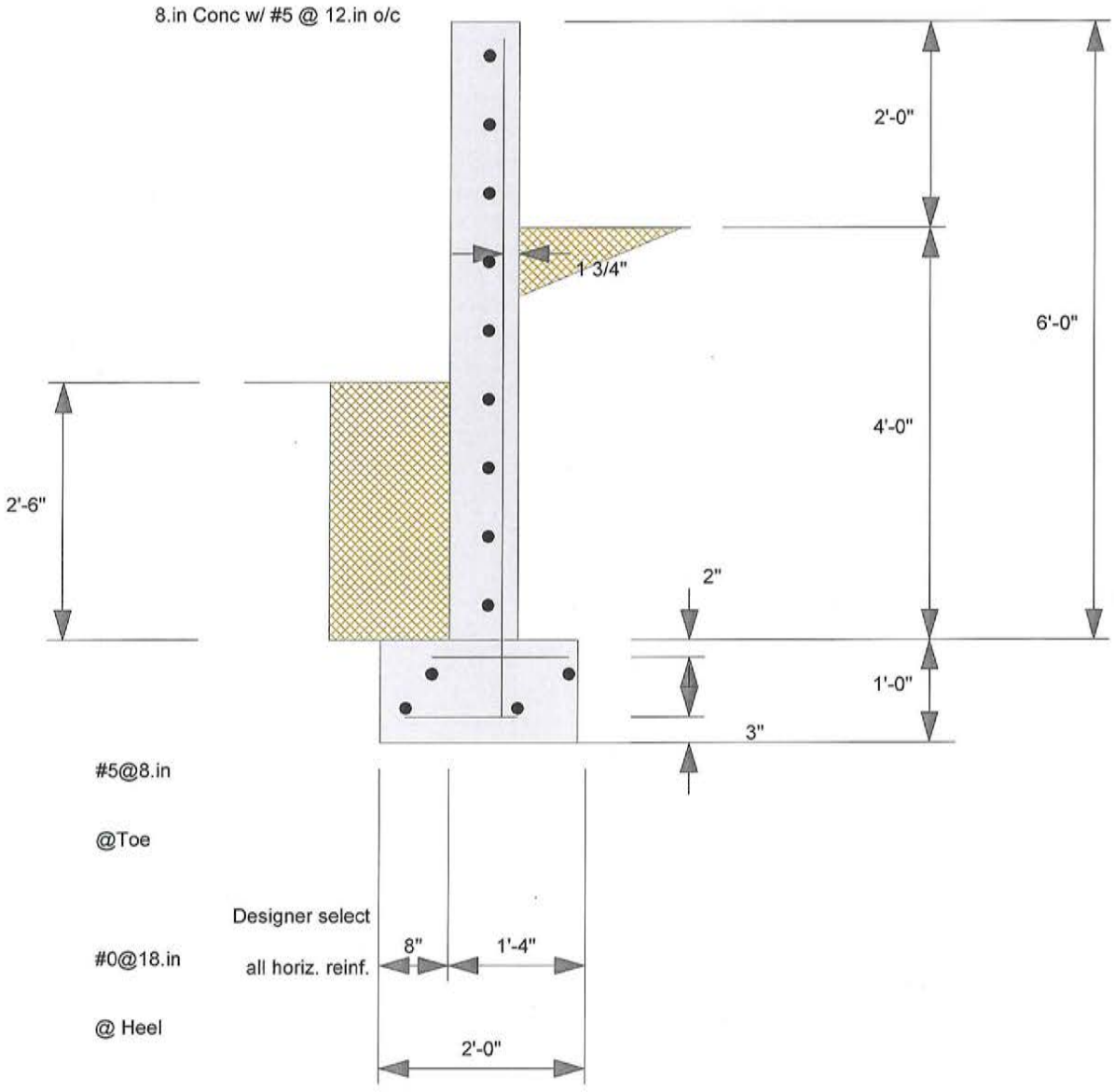
8.in Conc w/ #5 @ 12.in o/c
2'-0"
1 3/4"
6'-0"
4'-0"
2'-6"
2"
1'-0"
3"
#5@8.in
@Toe
Designer select
all horiz. reinf.
#0@18.in
@ Heel
8"
1'-4"
2'-0"

RICHMOND HOFFMAYER INC.
STRUCTURAL ENGINEERING

Project Title: VILLAGE NEST
Engineer: JJH
Project Descr: MULTI UNIT PROJECT

Project ID: 2017-0610

753

Printed: 11 JUL 2017, 3:30PM

General Footing

File = d:\ENERCALC Projects\2017-0610.ec6
ENERCALC, INC. 1983-2017, Build:10.17.6.29, Ver:10.17.6.29
Lic. # : KW-06002886 Licensee : RICHMOND HOFFMAYER

Description : MAX INTERIOR PAD FOOTING: 4" P.C.

Code References

Calculations per ACI 318-14, IBC 2015, CBC 2016, ASCE 7-10
Load Combinations Used : ASCE 7-10

General Information

Material Properties

f'c : Concrete 28 day strength	=	2.50 ksi
fy : Rebar Yield	=	60.0 ksi
Ec : Concrete Elastic Modulus	=	3,122.0 ksi
Concrete Density	=	145.0 pcf
φ Values Flexure	=	0.90
Shear	=	0.850

Analysis Settings

Min Steel % Bending Reinf.	=	
Min Allow % Temp Reinf.	=	0.00180
Min. Overturning Safety Factor	=	1.50 : 1
Min. Sliding Safety Factor	=	1.50 : 1
Add Ftg Wt for Soil Pressure	:	No
Use ftg wt for stability, moments & shears	:	No
Add Pedestal Wt for Soil Pressure	:	No
Use Pedestal wt for stability, mom & shear	:	No

Soil Design Values

Allowable Soil Bearing	=	2.50 ksf
Increase Bearing By Footing Weight	=	No
Soil Passive Resistance (for Sliding)	=	180.0 pcf
Soil/Concrete Friction Coeff.	=	0.450

Increases based on footing Depth

Footing base depth below soil surface	=	2.0 ft
Allow press. increase per foot of depth	=	ksf
when footing base is below	=	ft

Increases based on footing plan dimension

Allowable pressure increase per foot of depth	=	ksf
when max. length or width is greater than	=	ft

Dimensions

Width parallel to X-X Axis	=	5.0 ft
Length parallel to Z-Z Axis	=	5.0 ft
Footing Thickness	=	18.0 in

Pedestal dimensions...

px : parallel to X-X Axis	=	in
pz : parallel to Z-Z Axis	=	in
Height	=	in

Rebar Centerline to Edge of Concrete...

at Bottom of footing	=	3.0 in

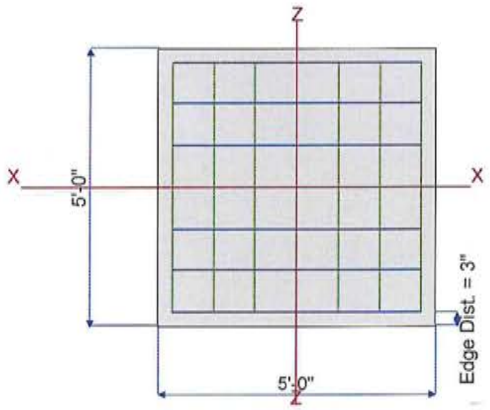

Reinforcing

Bars parallel to X-X Axis			
Number of Bars	=		7.0
Reinforcing Bar Size	=	#	5
Bars parallel to Z-Z Axis			
Number of Bars	=		7.0
Reinforcing Bar Size	=	#	5

Bandwidth Distribution Check (ACI 15.4.4.2)

Direction Requiring Closer Separation	n/a
# Bars required within zone	n/a
# Bars required on each side of zone	n/a

X-X Section Looking to +Z

Z-Z Section Looking to +X

Applied Loads

		D	Lr	L	S	W	E	H	
P : Column Load	=	3.807	4.015		49.381				k
OB : Overburden	=								ksf
M-xx	=								k-ft
M-zz	=								k-ft
V-x	=								k
V-z	=								k

RICHMOND HOFFMAYER INC.
STRUCTURAL ENGINEERING

Project Title: VILLAGE NEST
Engineer: JJH
Project Descr: MULTI UNIT PROJECT

Project ID: 2017-0610
254

Printed: 11 JUL 2017, 3:30PM

General Footing

File = d:\ENERCALC Projects\2017-0610.ec6
ENERCALC, INC. 1983-2017, Build:10.17.6.29, Ver:10.17.6.29
Lic. # : KW-06002886 Licensee : RICHMOND HOFFMAYER

Description : MAX INTERIOR PAD FOOTING: 4" P.C.

DESIGN SUMMARY

Design OK

	Min. Ratio	Item	Applied	Capacity	Governing Load Combination
PASS	0.8732	Soil Bearing	2.183 ksf	2.50 ksf	+D+S about Z-Z axis
PASS	n/a	Overturning - X-X	0.0 k-ft	0.0 k-ft	No Overturning
PASS	n/a	Overturning - Z-Z	0.0 k-ft	0.0 k-ft	No Overturning
PASS	n/a	Sliding - X-X	0.0 k	0.0 k	No Sliding
PASS	n/a	Sliding - Z-Z	0.0 k	0.0 k	No Sliding
PASS	n/a	Uplift	0.0 k	0.0 k	No Uplift
PASS	0.3692	Z Flexure (+X)	10.447 k-ft/ft	28.298 k-ft/ft	+1.20D+1.60S
PASS	0.3692	Z Flexure (-X)	10.447 k-ft/ft	28.298 k-ft/ft	+1.20D+1.60S
PASS	0.3692	X Flexure (+Z)	10.447 k-ft/ft	28.298 k-ft/ft	+1.20D+1.60S
PASS	0.3692	X Flexure (-Z)	10.447 k-ft/ft	28.298 k-ft/ft	+1.20D+1.60S
PASS	0.2731	1-way Shear (+X)	23.216 psi	85.0 psi	+1.20D+1.60S
PASS	0.2731	1-way Shear (-X)	23.216 psi	85.0 psi	+1.20D+1.60S
PASS	0.2731	1-way Shear (+Z)	23.216 psi	85.0 psi	+1.20D+1.60S
PASS	0.2731	1-way Shear (-Z)	23.216 psi	85.0 psi	+1.20D+1.60S
PASS	0.5074	2-way Punching	86.261 psi	170.0 psi	+1.20D+1.60S

Detailed Results

Soil Bearing

Rotation Axis & Load Combination...	Gross Allowable	Xecc (in)	Zecc (in)	Actual Soil Bearing Stress @ Location Bottom, -Z	Top, +Z	Left, -X	Right, +X	Actual / Allow Ratio
X-X, D Only	2.50	n/a	0.0	0.2073	0.2073	n/a	n/a	0.083
X-X, +D+Lr	2.50	n/a	0.0	0.3679	0.3679	n/a	n/a	0.147
X-X, +D+S	2.50	n/a	0.0	2.183	2.183	n/a	n/a	0.873
X-X, +D+0.750Lr	2.50	n/a	0.0	0.3277	0.3277	n/a	n/a	0.131
X-X, +D+0.750S	2.50	n/a	0.0	1.689	1.689	n/a	n/a	0.676
X-X, +0.60D	2.50	n/a	0.0	0.1244	0.1244	n/a	n/a	0.050
Z-Z, D Only	2.50	0.0	n/a	n/a	n/a	0.2073	0.2073	0.083
Z-Z, +D+Lr	2.50	0.0	n/a	n/a	n/a	0.3679	0.3679	0.147
Z-Z, +D+S	2.50	0.0	n/a	n/a	n/a	2.183	2.183	0.873
Z-Z, +D+0.750Lr	2.50	0.0	n/a	n/a	n/a	0.3277	0.3277	0.131
Z-Z, +D+0.750S	2.50	0.0	n/a	n/a	n/a	1.689	1.689	0.676
Z-Z, +0.60D	2.50	0.0	n/a	n/a	n/a	0.1244	0.1244	0.050

Footing Flexure

Flexure Axis & Load Combination	Mu k-ft	Side	Tension Surface	As Req'd in^2	Gvrn. As in^2	Actual As in^2	Phi*Mn k-ft	Status
X-X, +1.40D	0.6662	+Z	Bottom	0.3888	Min Temp %	0.4340	28.298	OK
X-X, +1.40D	0.6662	-Z	Bottom	0.3888	Min Temp %	0.4340	28.298	OK
X-X, +1.20D+0.50Lr	0.8220	+Z	Bottom	0.3888	Min Temp %	0.4340	28.298	OK
X-X, +1.20D+0.50Lr	0.8220	-Z	Bottom	0.3888	Min Temp %	0.4340	28.298	OK
X-X, +1.20D+0.50S	3.657	+Z	Bottom	0.3888	Min Temp %	0.4340	28.298	OK
X-X, +1.20D+0.50S	3.657	-Z	Bottom	0.3888	Min Temp %	0.4340	28.298	OK
X-X, +1.20D+1.60Lr	1.374	+Z	Bottom	0.3888	Min Temp %	0.4340	28.298	OK
X-X, +1.20D+1.60Lr	1.374	-Z	Bottom	0.3888	Min Temp %	0.4340	28.298	OK
X-X, +1.20D+1.60S	10.447	+Z	Bottom	0.3888	Min Temp %	0.4340	28.298	OK
X-X, +1.20D+1.60S	10.447	-Z	Bottom	0.3888	Min Temp %	0.4340	28.298	OK
X-X, +1.20D+0.20S	1.806	+Z	Bottom	0.3888	Min Temp %	0.4340	28.298	OK
X-X, +1.20D+0.20S	1.806	-Z	Bottom	0.3888	Min Temp %	0.4340	28.298	OK
X-X, +0.90D	0.4283	+Z	Bottom	0.3888	Min Temp %	0.4340	28.298	OK
X-X, +0.90D	0.4283	-Z	Bottom	0.3888	Min Temp %	0.4340	28.298	OK
Z-Z, +1.40D	0.6662	-X	Bottom	0.3888	Min Temp %	0.4340	28.298	OK
Z-Z, +1.40D	0.6662	+X	Bottom	0.3888	Min Temp %	0.4340	28.298	OK
Z-Z, +1.20D+0.50Lr	0.8220	-X	Bottom	0.3888	Min Temp %	0.4340	28.298	OK
Z-Z, +1.20D+0.50Lr	0.8220	+X	Bottom	0.3888	Min Temp %	0.4340	28.298	OK
Z-Z, +1.20D+0.50S	3.657	-X	Bottom	0.3888	Min Temp %	0.4340	28.298	OK
Z-Z, +1.20D+0.50S	3.657	+X	Bottom	0.3888	Min Temp %	0.4340	28.298	OK
Z-Z, +1.20D+1.60Lr	1.374	-X	Bottom	0.3888	Min Temp %	0.4340	28.298	OK
Z-Z, +1.20D+1.60Lr	1.374	+X	Bottom	0.3888	Min Temp %	0.4340	28.298	OK
Z-Z, +1.20D+1.60S	10.447	-X	Bottom	0.3888	Min Temp %	0.4340	28.298	OK
Z-Z, +1.20D+1.60S	10.447	+X	Bottom	0.3888	Min Temp %	0.4340	28.298	OK

RICHMOND HOFFMAYER INC.
STRUCTURAL ENGINEERING

Project Title: VILLAGE NEST
Engineer: JJH
Project Descr: MULTI UNIT PROJECT

Project ID: 2017-0610
256

Printed: 11 JUL 2017, 3:30PM

General Footing

File = d:\ENERCALC Projects\2017-0610.ec6
ENERCALC, INC. 1983-2017, Build:10.17.6.29, Ver:10.17.6.29

Lic. # : KW-06002886 Licensee : RICHMOND HOFFMAYER

Description : MAX INTERIOR PAD FOOTING: 4" P.C.

Footing Flexure

Flexure Axis & Load Combination	Mu k-ft	Side	Tension Surface	As Req'd in^2	Gvrn. As in^2	Actual As in^2	Phi*Mn k-ft	Status
Z-Z, +1.20D+0.20S	1.806	-X	Bottom	0.3888	Min Temp %	0.4340	28.298	OK
Z-Z, +1.20D+0.20S	1.806	+X	Bottom	0.3888	Min Temp %	0.4340	28.298	OK
Z-Z, +0.90D	0.4283	-X	Bottom	0.3888	Min Temp %	0.4340	28.298	OK
Z-Z, +0.90D	0.4283	+X	Bottom	0.3888	Min Temp %	0.4340	28.298	OK

One Way Shear

Load Combination...	Vu @ -X	Vu @ +X	Vu @ -Z	Vu @ +Z	Vu:Max	Phi Vn	Vu / Phi*Vn	Status
+1.40D	1.48 psi	1.48 psi	1.48 psi	1.48 psi	1.48 psi	85.00 psi	0.02	0.00
+1.20D+0.50Lr	1.83 psi	1.83 psi	1.83 psi	1.83 psi	1.83 psi	85.00 psi	0.02	0.00
+1.20D+0.50S	8.13 psi	8.13 psi	8.13 psi	8.13 psi	8.13 psi	85.00 psi	0.10	0.00
+1.20D+1.60Lr	3.05 psi	3.05 psi	3.05 psi	3.05 psi	3.05 psi	85.00 psi	0.04	0.00
+1.20D+1.60S	23.22 psi	23.22 psi	23.22 psi	23.22 psi	23.22 psi	85.00 psi	0.27	0.00
+1.20D+0.20S	4.01 psi	4.01 psi	4.01 psi	4.01 psi	4.01 psi	85.00 psi	0.05	0.00
+0.90D	0.95 psi	0.95 psi	0.95 psi	0.95 psi	0.95 psi	85.00 psi	0.01	0.00

Two-Way "Punching" Shear

All units k

Load Combination...	Vu	Phi*Vn	Vu / Phi*Vn	Status
+1.40D	5.50 psi	170.00 psi	0.03236	OK
+1.20D+0.50Lr	6.79 psi	170.00 psi	0.03992	OK
+1.20D+0.50S	30.20 psi	170.00 psi	0.1776	OK
+1.20D+1.60Lr	11.35 psi	170.00 psi	0.06674	OK
+1.20D+1.60S	86.26 psi	170.00 psi	0.5074	OK
+1.20D+0.20S	14.91 psi	170.00 psi	0.0877	OK
+0.90D	3.54 psi	170.00 psi	0.0208	OK

RICHMOND HOFFMAYER INC.
STRUCTURAL ENGINEERING

Project Title: VILLAGE NEST
Engineer: JJH
Project Descr: MULTI UNIT PROJECT

Project ID: 2017-0610
25C

Printed: 11 JUL 2017, 3:27PM

General Footing

File = d:\ENERCALC Projects\2017-0610.ec6
ENERCALC, INC. 1983-2017, Build:10.17.6.29, Ver:10.17.6.29
Lic. # : KW-06002886 Licensee : RICHMOND HOFFMAYER

Description : INTERIOR PAD FOOTING: FELDSPAR LVN 4" P.C. UNDER B17

Code References

Calculations per ACI 318-14, IBC 2015, CBC 2016, ASCE 7-10
Load Combinations Used : ASCE 7-10

General Information

Material Properties

f'c : Concrete 28 day strength	=	2.50 ksi
fy : Rebar Yield	=	60.0 ksi
Ec : Concrete Elastic Modulus	=	3,122.0 ksi
Concrete Density	=	145.0 pcf
φ Values Flexure	=	0.90
Shear	=	0.850

Analysis Settings

Min Steel % Bending Reinf.	=	
Min Allow % Temp Reinf.	=	0.00180
Min. Overturning Safety Factor	=	1.50 : 1
Min. Sliding Safety Factor	=	1.50 : 1
Add Ftg Wt for Soil Pressure	:	No
Use ftg wt for stability, moments & shears	:	No
Add Pedestal Wt for Soil Pressure	:	No
Use Pedestal wt for stability, mom & shear	:	No

Soil Design Values

Allowable Soil Bearing	=	2.50 ksf
Increase Bearing By Footing Weight	=	No
Soil Passive Resistance (for Sliding)	=	180.0 pcf
Soil/Concrete Friction Coeff.	=	0.450

Increases based on footing Depth

Footing base depth below soil surface	=	2.0 ft
Allow press. increase per foot of depth	=	ksf
when footing base is below	=	ft

Increases based on footing plan dimension

Allowable pressure increase per foot of depth	=	ksf
when max. length or width is greater than	=	ft

Dimensions

Width parallel to X-X Axis	=	4.250 ft
Length parallel to Z-Z Axis	=	4.250 ft
Footing Thickness	=	18.0 in

Pedestal dimensions...

px : parallel to X-X Axis	=	in
pz : parallel to Z-Z Axis	=	in
Height	=	in

Rebar Centerline to Edge of Concrete...

at Bottom of footing	=	3.0 in

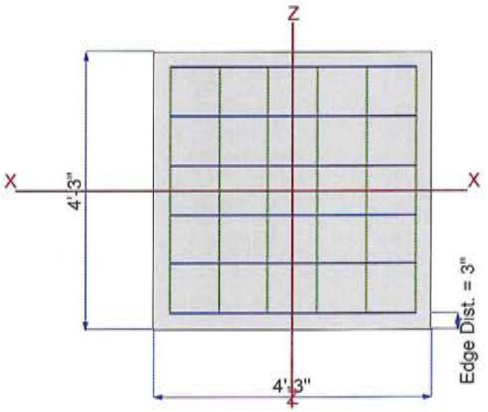

Reinforcing

Bars parallel to X-X Axis		
Number of Bars	=	6.0
Reinforcing Bar Size	=	# 5
Bars parallel to Z-Z Axis		
Number of Bars	=	6.0
Reinforcing Bar Size	=	# 5

Bandwidth Distribution Check (ACI 15.4.4.2)

Direction Requiring Closer Separation	n/a
# Bars required within zone	n/a
# Bars required on each side of zone	n/a

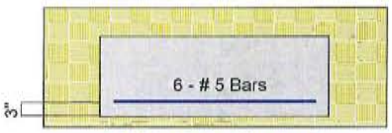

X-X Section Looking to +Z

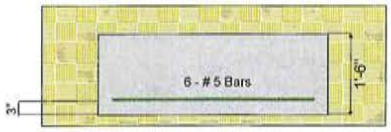

Z-Z Section Looking to +X

Applied Loads

		D	Lr	L	S	W	E	H	
P : Column Load	=	2.843	2.906	0.280	36.394				k
OB : Overburden	=								ksf
M-xx	=								k-ft
M-zz	=								k-ft
V-x	=								k
V-z	=								k

RICHMOND HOFFMAYER INC.
STRUCTURAL ENGINEERING

Project Title: VILLAGE NEST
Engineer: JJH
Project Descr: MULTI UNIT PROJECT

Project ID: 2017-0610

257

Printed: 11 JUL 2017, 3:27PM

General Footing

File = d:\ENERCALC Projects\2017-0610.ec6
ENERCALC, INC. 1983-2017, Build:10.17.6.29, Ver:10.17.6.29

Lic. # : KW-06002886 — Licensee : RICHMOND HOFFMAYER

Description : INTERIOR PAD FOOTING: FELDSPAR LVN 4" P.C. UNDER B17

DESIGN SUMMARY

Design OK

	Min. Ratio	Item	Applied	Capacity	Governing Load Combination
PASS	0.8908	Soil Bearing	2.227 ksf	2.50 ksf	+D+S about Z-Z axis
PASS	n/a	Overturning - X-X	0.0 k-ft	0.0 k-ft	No Overturning
PASS	n/a	Overturning - Z-Z	0.0 k-ft	0.0 k-ft	No Overturning
PASS	n/a	Sliding - X-X	0.0 k	0.0 k	No Sliding
PASS	n/a	Sliding - Z-Z	0.0 k	0.0 k	No Sliding
PASS	n/a	Uplift	0.0 k	0.0 k	No Uplift
PASS	0.2707	Z Flexure (+X)	7.723 k-ft/ft	28.527 k-ft/ft	+1.20D+0.50L+1.60S
PASS	0.2707	Z Flexure (-X)	7.723 k-ft/ft	28.527 k-ft/ft	+1.20D+0.50L+1.60S
PASS	0.2707	X Flexure (+Z)	7.723 k-ft/ft	28.527 k-ft/ft	+1.20D+0.50L+1.60S
PASS	0.2707	X Flexure (-Z)	7.723 k-ft/ft	28.527 k-ft/ft	+1.20D+0.50L+1.60S
PASS	0.190	1-way Shear (+X)	16.152 psi	85.0 psi	+1.20D+0.50L+1.60S
PASS	0.190	1-way Shear (-X)	16.152 psi	85.0 psi	+1.20D+0.50L+1.60S
PASS	0.190	1-way Shear (+Z)	16.152 psi	85.0 psi	+1.20D+0.50L+1.60S
PASS	0.190	1-way Shear (-Z)	16.152 psi	85.0 psi	+1.20D+0.50L+1.60S
PASS	0.3675	2-way Punching	62.468 psi	170.0 psi	+1.20D+0.50L+1.60S

Detailed Results

Soil Bearing

Rotation Axis & Load Combination...	Gross Allowable	Xecc (in)	Zecc (in)	Actual Soil Bearing Stress @ Location: Bottom, -Z	Top, +Z	Left, -X	Right, +X	Actual / Allow Ratio
X-X, D Only	2.50	n/a	0.0	0.2124	0.2124	n/a	n/a	0.085
X-X, +D+L	2.50	n/a	0.0	0.2279	0.2279	n/a	n/a	0.091
X-X, +D+Lr	2.50	n/a	0.0	0.3733	0.3733	n/a	n/a	0.149
X-X, +D+S	2.50	n/a	0.0	2.227	2.227	n/a	n/a	0.891
X-X, +D+0.750Lr+0.750L	2.50	n/a	0.0	0.3447	0.3447	n/a	n/a	0.138
X-X, +D+0.750L+0.750S	2.50	n/a	0.0	1.735	1.735	n/a	n/a	0.694
X-X, +0.60D	2.50	n/a	0.0	0.1274	0.1274	n/a	n/a	0.051
Z-Z, D Only	2.50	0.0	n/a	n/a	n/a	0.2124	0.2124	0.085
Z-Z, +D+L	2.50	0.0	n/a	n/a	n/a	0.2279	0.2279	0.091
Z-Z, +D+Lr	2.50	0.0	n/a	n/a	n/a	0.3733	0.3733	0.149
Z-Z, +D+S	2.50	0.0	n/a	n/a	n/a	2.227	2.227	0.891
Z-Z, +D+0.750Lr+0.750L	2.50	0.0	n/a	n/a	n/a	0.3447	0.3447	0.138
Z-Z, +D+0.750L+0.750S	2.50	0.0	n/a	n/a	n/a	1.735	1.735	0.694
Z-Z, +0.60D	2.50	0.0	n/a	n/a	n/a	0.1274	0.1274	0.051

Footing Flexure

Flexure Axis & Load Combination	Mu k-ft	Side	Tension Surface	As Req'd in^2	Gvrn. As in^2	Actual As in^2	Phi*Mn k-ft	Status
X-X, +1.40D	0.4975	+Z	Bottom	0.3888	Min Temp %	0.4376	28.527	OK
X-X, +1.40D	0.4975	-Z	Bottom	0.3888	Min Temp %	0.4376	28.527	OK
X-X, +1.20D+0.50Lr+1.60L	0.6641	+Z	Bottom	0.3888	Min Temp %	0.4376	28.527	OK
X-X, +1.20D+0.50Lr+1.60L	0.6641	-Z	Bottom	0.3888	Min Temp %	0.4376	28.527	OK
X-X, +1.20D+1.60L+0.50S	2.757	+Z	Bottom	0.3888	Min Temp %	0.4376	28.527	OK
X-X, +1.20D+1.60L+0.50S	2.757	-Z	Bottom	0.3888	Min Temp %	0.4376	28.527	OK
X-X, +1.20D+1.60Lr+0.50L	1.025	+Z	Bottom	0.3888	Min Temp %	0.4376	28.527	OK
X-X, +1.20D+1.60Lr+0.50L	1.025	-Z	Bottom	0.3888	Min Temp %	0.4376	28.527	OK
X-X, +1.20D+1.60Lr	1.008	+Z	Bottom	0.3888	Min Temp %	0.4376	28.527	OK
X-X, +1.20D+1.60Lr	1.008	-Z	Bottom	0.3888	Min Temp %	0.4376	28.527	OK
X-X, +1.20D+0.50L+1.60S	7.723	+Z	Bottom	0.3888	Min Temp %	0.4376	28.527	OK
X-X, +1.20D+0.50L+1.60S	7.723	-Z	Bottom	0.3888	Min Temp %	0.4376	28.527	OK
X-X, +1.20D+1.60S	7.705	+Z	Bottom	0.3888	Min Temp %	0.4376	28.527	OK
X-X, +1.20D+1.60S	7.705	-Z	Bottom	0.3888	Min Temp %	0.4376	28.527	OK
X-X, +1.20D+0.50Lr+0.50L	0.6256	+Z	Bottom	0.3888	Min Temp %	0.4376	28.527	OK
X-X, +1.20D+0.50Lr+0.50L	0.6256	-Z	Bottom	0.3888	Min Temp %	0.4376	28.527	OK
X-X, +1.20D+0.50L+0.50S	2.719	+Z	Bottom	0.3888	Min Temp %	0.4376	28.527	OK
X-X, +1.20D+0.50L+0.50S	2.719	-Z	Bottom	0.3888	Min Temp %	0.4376	28.527	OK
X-X, +1.20D+0.50L+0.20S	1.354	+Z	Bottom	0.3888	Min Temp %	0.4376	28.527	OK
X-X, +1.20D+0.50L+0.20S	1.354	-Z	Bottom	0.3888	Min Temp %	0.4376	28.527	OK
X-X, +0.90D	0.3198	+Z	Bottom	0.3888	Min Temp %	0.4376	28.527	OK
X-X, +0.90D	0.3198	-Z	Bottom	0.3888	Min Temp %	0.4376	28.527	OK

RICHMOND HOFFMAYER INC.
STRUCTURAL ENGINEERING

Project Title: VILLAGE NEST
Engineer: JJH
Project Descr: MULTI UNIT PROJECT

Project ID: 2017-0610

Printed: 11 JUL 2017, 3:27PM

General Footing

File = d:\ENERCALC Projects\2017-0610.ec6
ENERCALC, INC. 1983-2017, Build:10.17.6.29, Ver:10.17.6.29

Lic. # : KW-06002886 — Licensee : RICHMOND HOFFMAYER

Description : INTERIOR PAD FOOTING: FELDSPAR LVN 4" P.C. UNDER B17

Footing Flexure

Flexure Axis & Load Combination	Mu k-ft	Side	Tension Surface	As Req'd in^2	Gvrn. As in^2	Actual As in^2	Phi*Mn k-ft	Status
Z-Z, +1.40D	0.4975	-X	Bottom	0.3888	Min Temp %	0.4376	28.527	OK
Z-Z, +1.40D	0.4975	+X	Bottom	0.3888	Min Temp %	0.4376	28.527	OK
Z-Z, +1.20D+0.50Lr+1.60L	0.6641	-X	Bottom	0.3888	Min Temp %	0.4376	28.527	OK
Z-Z, +1.20D+0.50Lr+1.60L	0.6641	+X	Bottom	0.3888	Min Temp %	0.4376	28.527	OK
Z-Z, +1.20D+1.60L+0.50S	2.757	-X	Bottom	0.3888	Min Temp %	0.4376	28.527	OK
Z-Z, +1.20D+1.60L+0.50S	2.757	+X	Bottom	0.3888	Min Temp %	0.4376	28.527	OK
Z-Z, +1.20D+1.60Lr+0.50L	1.025	-X	Bottom	0.3888	Min Temp %	0.4376	28.527	OK
Z-Z, +1.20D+1.60Lr+0.50L	1.025	+X	Bottom	0.3888	Min Temp %	0.4376	28.527	OK
Z-Z, +1.20D+1.60Lr	1.008	-X	Bottom	0.3888	Min Temp %	0.4376	28.527	OK
Z-Z, +1.20D+1.60Lr	1.008	+X	Bottom	0.3888	Min Temp %	0.4376	28.527	OK
Z-Z, +1.20D+0.50L+1.60S	7.723	-X	Bottom	0.3888	Min Temp %	0.4376	28.527	OK
Z-Z, +1.20D+0.50L+1.60S	7.723	+X	Bottom	0.3888	Min Temp %	0.4376	28.527	OK
Z-Z, +1.20D+1.60S	7.705	-X	Bottom	0.3888	Min Temp %	0.4376	28.527	OK
Z-Z, +1.20D+1.60S	7.705	+X	Bottom	0.3888	Min Temp %	0.4376	28.527	OK
Z-Z, +1.20D+0.50Lr+0.50L	0.6256	-X	Bottom	0.3888	Min Temp %	0.4376	28.527	OK
Z-Z, +1.20D+0.50Lr+0.50L	0.6256	+X	Bottom	0.3888	Min Temp %	0.4376	28.527	OK
Z-Z, +1.20D+0.50L+0.50S	2.719	-X	Bottom	0.3888	Min Temp %	0.4376	28.527	OK
Z-Z, +1.20D+0.50L+0.50S	2.719	+X	Bottom	0.3888	Min Temp %	0.4376	28.527	OK
Z-Z, +1.20D+0.50L+0.20S	1.354	-X	Bottom	0.3888	Min Temp %	0.4376	28.527	OK
Z-Z, +1.20D+0.50L+0.20S	1.354	+X	Bottom	0.3888	Min Temp %	0.4376	28.527	OK
Z-Z, +0.90D	0.3198	-X	Bottom	0.3888	Min Temp %	0.4376	28.527	OK
Z-Z, +0.90D	0.3198	+X	Bottom	0.3888	Min Temp %	0.4376	28.527	OK

One Way Shear

Load Combination...	Vu @ -X	Vu @ +X	Vu @ -Z	Vu @ +Z	Vu:Max	Phi Vn	Vu / Phi*Vn	Status
+1.40D	1.04 psi	1.04 psi	1.04 psi	1.04 psi	1.04 psi	85.00 psi	0.01	0.00
+1.20D+0.50Lr+1.60L	1.39 psi	1.39 psi	1.39 psi	1.39 psi	1.39 psi	85.00 psi	0.02	0.00
+1.20D+1.60L+0.50S	5.77 psi	5.77 psi	5.77 psi	5.77 psi	5.77 psi	85.00 psi	0.07	0.00
+1.20D+1.60Lr+0.50L	2.14 psi	2.14 psi	2.14 psi	2.14 psi	2.14 psi	85.00 psi	0.03	0.00
+1.20D+1.60Lr	2.11 psi	2.11 psi	2.11 psi	2.11 psi	2.11 psi	85.00 psi	0.02	0.00
+1.20D+0.50L+1.60S	16.15 psi	16.15 psi	16.15 psi	16.15 psi	16.15 psi	85.00 psi	0.19	0.00
+1.20D+1.60S	16.12 psi	16.12 psi	16.12 psi	16.12 psi	16.12 psi	85.00 psi	0.19	0.00
+1.20D+0.50Lr+0.50L	1.31 psi	1.31 psi	1.31 psi	1.31 psi	1.31 psi	85.00 psi	0.02	0.00
+1.20D+0.50L+0.50S	5.69 psi	5.69 psi	5.69 psi	5.69 psi	5.69 psi	85.00 psi	0.07	0.00
+1.20D+0.50L+0.20S	2.83 psi	2.83 psi	2.83 psi	2.83 psi	2.83 psi	85.00 psi	0.03	0.00
+0.90D	0.67 psi	0.67 psi	0.67 psi	0.67 psi	0.67 psi	85.00 psi	0.01	0.00

Two-Way "Punching" Shear

All units k

Load Combination...	Vu	Phi*Vn	Vu / Phi*Vn	Status
+1.40D	4.02 psi	170.00 psi	0.02367	OK
+1.20D+0.50Lr+1.60L	5.37 psi	170.00 psi	0.0316	OK
+1.20D+1.60L+0.50S	22.30 psi	170.00 psi	0.1312	OK
+1.20D+1.60Lr+0.50L	8.29 psi	170.00 psi	0.04878	OK
+1.20D+1.60Lr	8.15 psi	170.00 psi	0.04795	OK
+1.20D+0.50L+1.60S	62.47 psi	170.00 psi	0.3675	OK
+1.20D+1.60S	62.33 psi	170.00 psi	0.3666	OK
+1.20D+0.50Lr+0.50L	5.06 psi	170.00 psi	0.02977	OK
+1.20D+0.50L+0.50S	21.99 psi	170.00 psi	0.1294	OK
+1.20D+0.50L+0.20S	10.95 psi	170.00 psi	0.06442	OK
+0.90D	2.59 psi	170.00 psi	0.01522	OK

RICHMOND HOFFMAYER INC.
STRUCTURAL ENGINEERING

Project Title: VILLAGE NEST
Engineer: JJH
Project Descr: MULTI UNIT PROJECT

Project ID: 2017-0610
259

Printed: 11 JUL 2017, 3:27PM

General Footing

File = d:\ENERCALC Projects\2017-0610.ec6
ENERCALC, INC. 1983-2017, Build:10.17.6.29, Ver:10.17.6.29
Lic. # : KW-06002886 Licensee : RICHMOND HOFFMAYER

Description : INTERIOR PAD FOOTING: QUARTZ LVN 4" P.C. UNDER B16 - NOT AT RIDGE

Code References

Calculations per ACI 318-14, IBC 2015, CBC 2016, ASCE 7-10
Load Combinations Used : ASCE 7-10

General Information

Material Properties

f'c : Concrete 28 day strength	=	2.50 ksi
fy : Rebar Yield	=	60.0 ksi
Ec : Concrete Elastic Modulus	=	3,122.0 ksi
Concrete Density	=	145.0 pcf
φ Values Flexure	=	0.90
Shear	=	0.850

Analysis Settings

Min Steel % Bending Reinf.	=	
Min Allow % Temp Reinf.	=	0.00180
Min. Overturning Safety Factor	=	1.50 : 1
Min. Sliding Safety Factor	=	1.50 : 1
Add Ftg Wt for Soil Pressure	:	No
Use ftg wt for stability, moments & shears	:	No
Add Pedestal Wt for Soil Pressure	:	No
Use Pedestal wt for stability, mom & shear	:	No

Soil Design Values

Allowable Soil Bearing	=	2.50 ksf
Increase Bearing By Footing Weight	=	No
Soil Passive Resistance (for Sliding)	=	180.0 pcf
Soil/Concrete Friction Coeff.	=	0.450

Increases based on footing Depth

Footing base depth below soil surface	=	2.0 ft
Allow press. increase per foot of depth	=	ksf
when footing base is below	=	ft

Increases based on footing plan dimension

Allowable pressure increase per foot of depth	=	ksf
when max. length or width is greater than	=	ft

Dimensions

Width parallel to X-X Axis	=	6.0 ft
Length parallel to Z-Z Axis	=	6.0 ft
Footing Thickness	=	24.0 in

Pedestal dimensions...

px : parallel to X-X Axis	=	in
pz : parallel to Z-Z Axis	=	in
Height	=	in

Rebar Centerline to Edge of Concrete...

at Bottom of footing	=	3.0 in

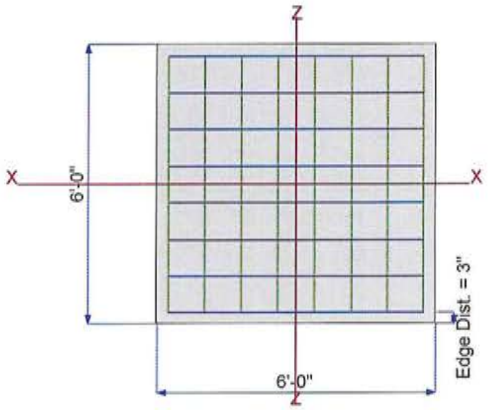

Reinforcing

Bars parallel to X-X Axis		
Number of Bars	=	8.0
Reinforcing Bar Size	=	# 6
Bars parallel to Z-Z Axis		
Number of Bars	=	8.0
Reinforcing Bar Size	=	# 6

Bandwidth Distribution Check (ACI 15.4.4.2)

Direction Requiring Closer Separation	n/a
# Bars required within zone	n/a
# Bars required on each side of zone	n/a

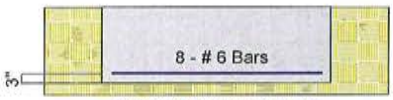

X-X Section Looking to +Z

Z-Z Section Looking to +X

Applied Loads

		D	Lr	L	S	W	E	H	
P : Column Load	=	6.880	1.120	7.625	60.0				k
OB : Overburden	=								ksf
M-xx	=								k-ft
M-zz	=								k-ft
V-x	=								k
V-z	=								k

RICHMOND HOFFMAYER INC.
STRUCTURAL ENGINEERING

Project Title: VILLAGE NEST
Engineer: JJH
Project Descr: MULTI UNIT PROJECT

Project ID: 2017-0610
260

Printed: 11 JUL 2017, 3:27PM

General Footing

File = d:\ENERCALC Projects\2017-0610.ec6
ENERCALC, INC. 1983-2017, Build:10.17.6.29, Ver:10.17.6.29
Lic. # : KW-06002886 Licensee : RICHMOND HOFFMAYER

Description : INTERIOR PAD FOOTING: QUARTZ LVN 4" P.C. UNDER B16 - NOT AT RIDGE

DESIGN SUMMARY

Design OK

	Min. Ratio	Item	Applied	Capacity	Governing Load Combination
PASS	0.7432	Soil Bearing	1.858 ksf	2.50 ksf	+D+S about Z-Z axis
PASS	n/a	Overturning - X-X	0.0 k-ft	0.0 k-ft	No Overturning
PASS	n/a	Overturning - Z-Z	0.0 k-ft	0.0 k-ft	No Overturning
PASS	n/a	Sliding - X-X	0.0 k	0.0 k	No Sliding
PASS	n/a	Sliding - Z-Z	0.0 k	0.0 k	No Sliding
PASS	n/a	Uplift	0.0 k	0.0 k	No Uplift
PASS	0.2519	Z Flexure (+X)	13.509 k-ft/ft	53.618 k-ft/ft	+1.20D+0.50L+1.60S
PASS	0.2519	Z Flexure (-X)	13.509 k-ft/ft	53.618 k-ft/ft	+1.20D+0.50L+1.60S
PASS	0.2519	X Flexure (+Z)	13.509 k-ft/ft	53.618 k-ft/ft	+1.20D+0.50L+1.60S
PASS	0.2519	X Flexure (-Z)	13.509 k-ft/ft	53.618 k-ft/ft	+1.20D+0.50L+1.60S
PASS	0.1822	1-way Shear (+X)	15.486 psi	85.0 psi	+1.20D+0.50L+1.60S
PASS	0.1822	1-way Shear (-X)	15.486 psi	85.0 psi	+1.20D+0.50L+1.60S
PASS	0.1822	1-way Shear (+Z)	15.486 psi	85.0 psi	+1.20D+0.50L+1.60S
PASS	0.1822	1-way Shear (-Z)	15.486 psi	85.0 psi	+1.20D+0.50L+1.60S
PASS	0.3279	2-way Punching	55.750 psi	170.0 psi	+1.20D+0.50L+1.60S

Detailed Results

Soil Bearing

Rotation Axis & Load Combination...	Gross Allowable	Xecc (in)	Zecc (in)	Actual Soil Bearing Stress @ Location Bottom, -Z	Top, +Z	Left, -X	Right, +X	Actual / Allow Ratio
X-X, D Only	2.50	n/a	0.0	0.1911	0.1911	n/a	n/a	0.076
X-X, +D+L	2.50	n/a	0.0	0.4029	0.4029	n/a	n/a	0.161
X-X, +D+Lr	2.50	n/a	0.0	0.2222	0.2222	n/a	n/a	0.089
X-X, +D+S	2.50	n/a	0.0	1.858	1.858	n/a	n/a	0.743
X-X, +D+0.750Lr+0.750L	2.50	n/a	0.0	0.3733	0.3733	n/a	n/a	0.149
X-X, +D+0.750L+0.750S	2.50	n/a	0.0	1.60	1.60	n/a	n/a	0.640
X-X, +0.60D	2.50	n/a	0.0	0.1147	0.1147	n/a	n/a	0.046
Z-Z, D Only	2.50	0.0	n/a	n/a	n/a	0.1911	0.1911	0.076
Z-Z, +D+L	2.50	0.0	n/a	n/a	n/a	0.4029	0.4029	0.161
Z-Z, +D+Lr	2.50	0.0	n/a	n/a	n/a	0.2222	0.2222	0.089
Z-Z, +D+S	2.50	0.0	n/a	n/a	n/a	1.858	1.858	0.743
Z-Z, +D+0.750Lr+0.750L	2.50	0.0	n/a	n/a	n/a	0.3733	0.3733	0.149
Z-Z, +D+0.750L+0.750S	2.50	0.0	n/a	n/a	n/a	1.60	1.60	0.640
Z-Z, +0.60D	2.50	0.0	n/a	n/a	n/a	0.1147	0.1147	0.046

Footing Flexure

Flexure Axis & Load Combination	Mu k-ft	Side	Tension Surface	As Req'd in^2	Gvrn. As in^2	Actual As in^2	Phi*Mn k-ft	Status
X-X, +1.40D	1.204	+Z	Bottom	0.5184	Min Temp %	0.5867	53.618	OK
X-X, +1.40D	1.204	-Z	Bottom	0.5184	Min Temp %	0.5867	53.618	OK
X-X, +1.20D+0.50Lr+1.60L	2.627	+Z	Bottom	0.5184	Min Temp %	0.5867	53.618	OK
X-X, +1.20D+0.50Lr+1.60L	2.627	-Z	Bottom	0.5184	Min Temp %	0.5867	53.618	OK
X-X, +1.20D+1.60L+0.50S	6.307	+Z	Bottom	0.5184	Min Temp %	0.5867	53.618	OK
X-X, +1.20D+1.60L+0.50S	6.307	-Z	Bottom	0.5184	Min Temp %	0.5867	53.618	OK
X-X, +1.20D+1.60Lr+0.50L	1.733	+Z	Bottom	0.5184	Min Temp %	0.5867	53.618	OK
X-X, +1.20D+1.60Lr+0.50L	1.733	-Z	Bottom	0.5184	Min Temp %	0.5867	53.618	OK
X-X, +1.20D+1.60Lr	1.256	+Z	Bottom	0.5184	Min Temp %	0.5867	53.618	OK
X-X, +1.20D+1.60Lr	1.256	-Z	Bottom	0.5184	Min Temp %	0.5867	53.618	OK
X-X, +1.20D+0.50L+1.60S	13.509	+Z	Bottom	0.5184	Min Temp %	0.5867	53.618	OK
X-X, +1.20D+0.50L+1.60S	13.509	-Z	Bottom	0.5184	Min Temp %	0.5867	53.618	OK
X-X, +1.20D+1.60S	13.032	+Z	Bottom	0.5184	Min Temp %	0.5867	53.618	OK
X-X, +1.20D+1.60S	13.032	-Z	Bottom	0.5184	Min Temp %	0.5867	53.618	OK
X-X, +1.20D+0.50Lr+0.50L	1.579	+Z	Bottom	0.5184	Min Temp %	0.5867	53.618	OK
X-X, +1.20D+0.50Lr+0.50L	1.579	-Z	Bottom	0.5184	Min Temp %	0.5867	53.618	OK
X-X, +1.20D+0.50L+0.50S	5.259	+Z	Bottom	0.5184	Min Temp %	0.5867	53.618	OK
X-X, +1.20D+0.50L+0.50S	5.259	-Z	Bottom	0.5184	Min Temp %	0.5867	53.618	OK
X-X, +1.20D+0.50L+0.20S	3.009	+Z	Bottom	0.5184	Min Temp %	0.5867	53.618	OK
X-X, +1.20D+0.50L+0.20S	3.009	-Z	Bottom	0.5184	Min Temp %	0.5867	53.618	OK
X-X, +0.90D	0.7740	+Z	Bottom	0.5184	Min Temp %	0.5867	53.618	OK
X-X, +0.90D	0.7740	-Z	Bottom	0.5184	Min Temp %	0.5867	53.618	OK

RICHMOND HOFFMAYER INC.
STRUCTURAL ENGINEERING

Project Title: VILLAGE NEST
Engineer: JJH
Project Descr: MULTI UNIT PROJECT

Project ID: 2017-0610
261

Printed: 11 JUL 2017, 3:27PM

General Footing

File = d:\ENERCALC Projects\2017-0610.ec6
ENERCALC, INC. 1983-2017, Build:10.17.6.29, Ver:10.17.6.29

Lic. # : KW-06002886 — Licensee : RICHMOND HOFFMAYER

Description : INTERIOR PAD FOOTING: QUARTZ LVN 4" P.C. UNDER B16 - NOT AT RIDGE

Footing Flexure

Flexure Axis & Load Combination	Mu k-ft	Side	Tension Surface	As Req'd in^2	Gvrn. As in^2	Actual As in^2	Phi*Mn k-ft	Status
Z-Z, +1.40D	1.204	-X	Bottom	0.5184	Min Temp %	0.5867	53.618	OK
Z-Z, +1.40D	1.204	+X	Bottom	0.5184	Min Temp %	0.5867	53.618	OK
Z-Z, +1.20D+0.50Lr+1.60L	2.627	-X	Bottom	0.5184	Min Temp %	0.5867	53.618	OK
Z-Z, +1.20D+0.50Lr+1.60L	2.627	+X	Bottom	0.5184	Min Temp %	0.5867	53.618	OK
Z-Z, +1.20D+1.60L+0.50S	6.307	-X	Bottom	0.5184	Min Temp %	0.5867	53.618	OK
Z-Z, +1.20D+1.60L+0.50S	6.307	+X	Bottom	0.5184	Min Temp %	0.5867	53.618	OK
Z-Z, +1.20D+1.60Lr+0.50L	1.733	-X	Bottom	0.5184	Min Temp %	0.5867	53.618	OK
Z-Z, +1.20D+1.60Lr+0.50L	1.733	+X	Bottom	0.5184	Min Temp %	0.5867	53.618	OK
Z-Z, +1.20D+1.60Lr	1.256	-X	Bottom	0.5184	Min Temp %	0.5867	53.618	OK
Z-Z, +1.20D+1.60Lr	1.256	+X	Bottom	0.5184	Min Temp %	0.5867	53.618	OK
Z-Z, +1.20D+0.50L+1.60S	13.509	-X	Bottom	0.5184	Min Temp %	0.5867	53.618	OK
Z-Z, +1.20D+0.50L+1.60S	13.509	+X	Bottom	0.5184	Min Temp %	0.5867	53.618	OK
Z-Z, +1.20D+1.60S	13.032	-X	Bottom	0.5184	Min Temp %	0.5867	53.618	OK
Z-Z, +1.20D+1.60S	13.032	+X	Bottom	0.5184	Min Temp %	0.5867	53.618	OK
Z-Z, +1.20D+0.50Lr+0.50L	1.579	-X	Bottom	0.5184	Min Temp %	0.5867	53.618	OK
Z-Z, +1.20D+0.50Lr+0.50L	1.579	+X	Bottom	0.5184	Min Temp %	0.5867	53.618	OK
Z-Z, +1.20D+0.50L+0.50S	5.259	-X	Bottom	0.5184	Min Temp %	0.5867	53.618	OK
Z-Z, +1.20D+0.50L+0.50S	5.259	+X	Bottom	0.5184	Min Temp %	0.5867	53.618	OK
Z-Z, +1.20D+0.50L+0.20S	3.009	-X	Bottom	0.5184	Min Temp %	0.5867	53.618	OK
Z-Z, +1.20D+0.50L+0.20S	3.009	+X	Bottom	0.5184	Min Temp %	0.5867	53.618	OK
Z-Z, +0.90D	0.7740	-X	Bottom	0.5184	Min Temp %	0.5867	53.618	OK
Z-Z, +0.90D	0.7740	+X	Bottom	0.5184	Min Temp %	0.5867	53.618	OK

One Way Shear

Load Combination...	Vu @ -X	Vu @ +X	Vu @ -Z	Vu @ +Z	Vu:Max	Phi Vn	Vu / Phi*Vn	Status
+1.40D	1.38 psi	1.38 psi	1.38 psi	1.38 psi	1.38 psi	85.00 psi	0.02	0.00
+1.20D+0.50Lr+1.60L	3.01 psi	3.01 psi	3.01 psi	3.01 psi	3.01 psi	85.00 psi	0.04	0.00
+1.20D+1.60L+0.50S	7.23 psi	7.23 psi	7.23 psi	7.23 psi	7.23 psi	85.00 psi	0.09	0.00
+1.20D+1.60Lr+0.50L	1.99 psi	1.99 psi	1.99 psi	1.99 psi	1.99 psi	85.00 psi	0.02	0.00
+1.20D+1.60Lr	1.44 psi	1.44 psi	1.44 psi	1.44 psi	1.44 psi	85.00 psi	0.02	0.00
+1.20D+0.50L+1.60S	15.49 psi	15.49 psi	15.49 psi	15.49 psi	15.49 psi	85.00 psi	0.18	0.00
+1.20D+1.60S	14.94 psi	14.94 psi	14.94 psi	14.94 psi	14.94 psi	85.00 psi	0.18	0.00
+1.20D+0.50Lr+0.50L	1.81 psi	1.81 psi	1.81 psi	1.81 psi	1.81 psi	85.00 psi	0.02	0.00
+1.20D+0.50L+0.50S	6.03 psi	6.03 psi	6.03 psi	6.03 psi	6.03 psi	85.00 psi	0.07	0.00
+1.20D+0.50L+0.20S	3.45 psi	3.45 psi	3.45 psi	3.45 psi	3.45 psi	85.00 psi	0.04	0.00
+0.90D	0.89 psi	0.89 psi	0.89 psi	0.89 psi	0.89 psi	85.00 psi	0.01	0.00

Two-Way "Punching" Shear

All units k

Load Combination...	Vu	Phi*Vn	Vu / Phi*Vn	Status
+1.40D	4.97 psi	170.00 psi	0.02923	OK
+1.20D+0.50Lr+1.60L	10.84 psi	170.00 psi	0.06377	OK
+1.20D+1.60L+0.50S	26.03 psi	170.00 psi	0.1531	OK
+1.20D+1.60Lr+0.50L	7.15 psi	170.00 psi	0.04206	OK
+1.20D+1.60Lr	5.18 psi	170.00 psi	0.03049	OK
+1.20D+0.50L+1.60S	55.75 psi	170.00 psi	0.3279	OK
+1.20D+1.60S	53.78 psi	170.00 psi	0.3164	OK
+1.20D+0.50Lr+0.50L	6.52 psi	170.00 psi	0.03832	OK
+1.20D+0.50L+0.50S	21.70 psi	170.00 psi	0.1277	OK
+1.20D+0.50L+0.20S	12.42 psi	170.00 psi	0.07304	OK
+0.90D	3.19 psi	170.00 psi	0.01879	OK

RICHMOND HOFFMAYER INC.
STRUCTURAL ENGINEERING

Project Title: VILLAGE NEST
Engineer: JJH
Project Descr: MULTI UNIT PROJECT

Project ID: 2017-0610
262

Printed: 11 JUL 2017, 3:27PM

General Footing

File = d:\ENERCALC Projects\2017-0610.ec6
ENERCALC, INC. 1983-2017, Build:10.17.6.29, Ver:10.17.6.29

Lic. # : KW-06002886 — Licensee : RICHMOND HOFFMAYER

Description : INTERIOR PAD FOOTING: QUARTZ LVN 4" P.C. UNDER B16 - UNDER RIDGE

Code References

Calculations per ACI 318-14, IBC 2015, CBC 2016, ASCE 7-10
Load Combinations Used : ASCE 7-10

General Information

Material Properties

f'c : Concrete 28 day strength	=	2.50 ksi
fy : Rebar Yield	=	60.0 ksi
Ec : Concrete Elastic Modulus	=	3,122.0 ksi
Concrete Density	=	145.0 pcf
φ Values Flexure	=	0.90
Shear	=	0.850

Analysis Settings

Min Steel % Bending Reinf.	=	
Min Allow % Temp Reinf.	=	0.00180
Min. Overturning Safety Factor	=	1.50 : 1
Min. Sliding Safety Factor	=	1.50 : 1
Add Ftg Wt for Soil Pressure	:	No
Use ftg wt for stability, moments & shears	:	No
Add Pedestal Wt for Soil Pressure	:	No
Use Pedestal wt for stability, mom & shear	:	No

Soil Design Values

Allowable Soil Bearing	=	2.50 ksf
Increase Bearing By Footing Weight	=	No
Soil Passive Resistance (for Sliding)	=	180.0 pcf
Soil/Concrete Friction Coeff.	=	0.450

Increases based on footing Depth

Footing base depth below soil surface	=	2.0 ft
Allow press. increase per foot of depth	=	ksf
when footing base is below	=	ft

Increases based on footing plan dimension

Allowable pressure increase per foot of depth	=	ksf
when max. length or width is greater than	=	ft

Dimensions

Width parallel to X-X Axis	=	6.250 ft
Length parallel to Z-Z Axis	=	6.250 ft
Footing Thickness	=	24.0 in

Pedestal dimensions...

px : parallel to X-X Axis	=	in
pz : parallel to Z-Z Axis	=	in
Height	=	in

Rebar Centerline to Edge of Concrete...

at Bottom of footing	=	3.0 in

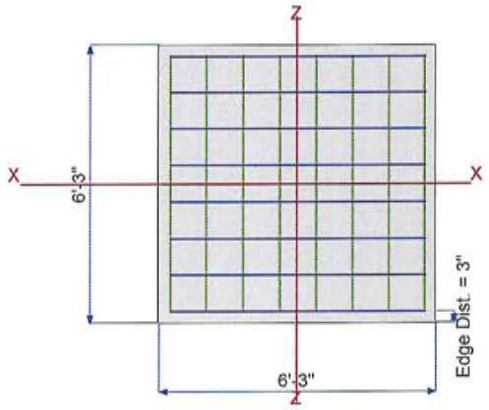

Reinforcing

Bars parallel to X-X Axis		
Number of Bars	=	8.0
Reinforcing Bar Size	=	# 6
Bars parallel to Z-Z Axis		
Number of Bars	=	8.0
Reinforcing Bar Size	=	# 6

Bandwidth Distribution Check (ACI 15.4.4.2)

Direction Requiring Closer Separation	n/a
# Bars required within zone	n/a
# Bars required on each side of zone	n/a

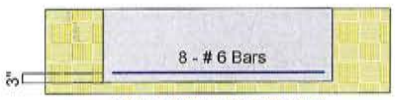

X-X Section Looking to +Z

Z-Z Section Looking to +X

Applied Loads

		D	Lr	L	S	W	E	H	
P : Column Load	=	9.0	1.0	9.0	80.0				k
OB : Overburden	=								ksf
M-xx	=								k-ft
M-zz	=								k-ft
V-x	=								k
V-z	=								k

RICHMOND HOFFMAYER INC.
STRUCTURAL ENGINEERING

Project Title: VILLAGE NEST
Engineer: JJH
Project Descr: MULTI UNIT PROJECT

Project ID: 2017-0610
263

Printed: 11 JUL 2017, 3:27PM

General Footing

File = d:\ENERCALC Projects\2017-0610.ec6
ENERCALC, INC. 1983-2017, Build:10.17.6.29, Ver:10.17.6.29
Lic. # : KW-06002886 Licensee : RICHMOND HOFFMAYER

Description : INTERIOR PAD FOOTING: QUARTZ LVN 4" P.C. UNDER B16 - UNDER RIDGE

DESIGN SUMMARY

Design OK

	Min. Ratio	Item	Applied	Capacity	Governing Load Combination
PASS	0.9112	Soil Bearing	2.278 ksf	2.50 ksf	+D+S about Z-Z axis
PASS	n/a	Overturning - X-X	0.0 k-ft	0.0 k-ft	No Overturning
PASS	n/a	Overturning - Z-Z	0.0 k-ft	0.0 k-ft	No Overturning
PASS	n/a	Sliding - X-X	0.0 k	0.0 k	No Sliding
PASS	n/a	Sliding - Z-Z	0.0 k	0.0 k	No Sliding
PASS	n/a	Uplift	0.0 k	0.0 k	No Uplift
PASS	0.3475	Z Flexure (+X)	17.913 k-ft/ft	51.543 k-ft/ft	+1.20D+0.50L+1.60S
PASS	0.3475	Z Flexure (-X)	17.913 k-ft/ft	51.543 k-ft/ft	+1.20D+0.50L+1.60S
PASS	0.3475	X Flexure (+Z)	17.913 k-ft/ft	51.543 k-ft/ft	+1.20D+0.50L+1.60S
PASS	0.3475	X Flexure (-Z)	17.913 k-ft/ft	51.543 k-ft/ft	+1.20D+0.50L+1.60S
PASS	0.2319	1-way Shear (+X)	19.713 psi	85.0 psi	+1.20D+0.50L+1.60S
PASS	0.2319	1-way Shear (-X)	19.713 psi	85.0 psi	+1.20D+0.50L+1.60S
PASS	0.2319	1-way Shear (+Z)	19.713 psi	85.0 psi	+1.20D+0.50L+1.60S
PASS	0.2319	1-way Shear (-Z)	19.713 psi	85.0 psi	+1.20D+0.50L+1.60S
PASS	0.4439	2-way Punching	75.459 psi	170.0 psi	+1.20D+0.50L+1.60S

Detailed Results

Soil Bearing

Rotation Axis & Load Combination...	Gross Allowable	Xecc (in)	Zecc (in)	Actual Soil Bearing Stress @ Location Bottom, -Z	Top, +Z	Left, -X	Right, +X	Actual / Allow Ratio
X-X, D Only	2.50	n/a	0.0	0.2304	0.2304	n/a	n/a	0.092
X-X, +D+L	2.50	n/a	0.0	0.4608	0.4608	n/a	n/a	0.184
X-X, +D+Lr	2.50	n/a	0.0	0.2560	0.2560	n/a	n/a	0.102
X-X, +D+S	2.50	n/a	0.0	2.278	2.278	n/a	n/a	0.911
X-X, +D+0.750Lr+0.750L	2.50	n/a	0.0	0.4224	0.4224	n/a	n/a	0.169
X-X, +D+0.750L+0.750S	2.50	n/a	0.0	1.939	1.939	n/a	n/a	0.776
X-X, +0.60D	2.50	n/a	0.0	0.1382	0.1382	n/a	n/a	0.055
Z-Z, D Only	2.50	0.0	n/a	n/a	n/a	0.2304	0.2304	0.092
Z-Z, +D+L	2.50	0.0	n/a	n/a	n/a	0.4608	0.4608	0.184
Z-Z, +D+Lr	2.50	0.0	n/a	n/a	n/a	0.2560	0.2560	0.102
Z-Z, +D+S	2.50	0.0	n/a	n/a	n/a	2.278	2.278	0.911
Z-Z, +D+0.750Lr+0.750L	2.50	0.0	n/a	n/a	n/a	0.4224	0.4224	0.169
Z-Z, +D+0.750L+0.750S	2.50	0.0	n/a	n/a	n/a	1.939	1.939	0.776
Z-Z, +0.60D	2.50	0.0	n/a	n/a	n/a	0.1382	0.1382	0.055

Footing Flexure

Flexure Axis & Load Combination	Mu k-ft	Side	Tension Surface	As Req'd in^2	Gvrn. As in^2	Actual As in^2	Phi*Mn k-ft	Status
X-X, +1.40D	1.575	+Z	Bottom	0.5184	Min Temp %	0.5632	51.543	OK
X-X, +1.40D	1.575	-Z	Bottom	0.5184	Min Temp %	0.5632	51.543	OK
X-X, +1.20D+0.50Lr+1.60L	3.213	+Z	Bottom	0.5184	Min Temp %	0.5632	51.543	OK
X-X, +1.20D+0.50Lr+1.60L	3.213	-Z	Bottom	0.5184	Min Temp %	0.5632	51.543	OK
X-X, +1.20D+1.60L+0.50S	8.150	+Z	Bottom	0.5184	Min Temp %	0.5632	51.543	OK
X-X, +1.20D+1.60L+0.50S	8.150	-Z	Bottom	0.5184	Min Temp %	0.5632	51.543	OK
X-X, +1.20D+1.60Lr+0.50L	2.113	+Z	Bottom	0.5184	Min Temp %	0.5632	51.543	OK
X-X, +1.20D+1.60Lr+0.50L	2.113	-Z	Bottom	0.5184	Min Temp %	0.5632	51.543	OK
X-X, +1.20D+1.60Lr	1.550	+Z	Bottom	0.5184	Min Temp %	0.5632	51.543	OK
X-X, +1.20D+1.60Lr	1.550	-Z	Bottom	0.5184	Min Temp %	0.5632	51.543	OK
X-X, +1.20D+0.50L+1.60S	17.913	+Z	Bottom	0.5184	Min Temp %	0.5632	51.543	OK
X-X, +1.20D+0.50L+1.60S	17.913	-Z	Bottom	0.5184	Min Temp %	0.5632	51.543	OK
X-X, +1.20D+1.60S	17.350	+Z	Bottom	0.5184	Min Temp %	0.5632	51.543	OK
X-X, +1.20D+1.60S	17.350	-Z	Bottom	0.5184	Min Temp %	0.5632	51.543	OK
X-X, +1.20D+0.50Lr+0.50L	1.975	+Z	Bottom	0.5184	Min Temp %	0.5632	51.543	OK
X-X, +1.20D+0.50Lr+0.50L	1.975	-Z	Bottom	0.5184	Min Temp %	0.5632	51.543	OK
X-X, +1.20D+0.50L+0.50S	6.913	+Z	Bottom	0.5184	Min Temp %	0.5632	51.543	OK
X-X, +1.20D+0.50L+0.50S	6.913	-Z	Bottom	0.5184	Min Temp %	0.5632	51.543	OK
X-X, +1.20D+0.50L+0.20S	3.913	+Z	Bottom	0.5184	Min Temp %	0.5632	51.543	OK
X-X, +1.20D+0.50L+0.20S	3.913	-Z	Bottom	0.5184	Min Temp %	0.5632	51.543	OK
X-X, +0.90D	1.013	+Z	Bottom	0.5184	Min Temp %	0.5632	51.543	OK
X-X, +0.90D	1.013	-Z	Bottom	0.5184	Min Temp %	0.5632	51.543	OK

RICHMOND HOFFMAYER INC.
STRUCTURAL ENGINEERING

Project Title: VILLAGE NEST
Engineer: JJH
Project Descr: MULTI UNIT PROJECT

Project ID: 2017-0610
264

Printed: 11 JUL 2017, 3:27PM

General Footing

File = d:\ENERCALC Projects\2017-0610.ec6
ENERCALC, INC. 1983-2017, Build:10.17.6.29, Ver:10.17.6.29

Lic. # : KW-06002886 Licensee : RICHMOND HOFFMAYER

Description : INTERIOR PAD FOOTING: QUARTZ LVN 4" P.C. UNDER B16 - UNDER RIDGE

Footing Flexure

Flexure Axis & Load Combination	Mu k-ft	Side	Tension Surface	As Req'd in^2	Gvrn. As in^2	Actual As in^2	Phi*Mn k-ft	Status
Z-Z, +1.40D	1.575	-X	Bottom	0.5184	Min Temp %	0.5632	51.543	OK
Z-Z, +1.40D	1.575	+X	Bottom	0.5184	Min Temp %	0.5632	51.543	OK
Z-Z, +1.20D+0.50Lr+1.60L	3.213	-X	Bottom	0.5184	Min Temp %	0.5632	51.543	OK
Z-Z, +1.20D+0.50Lr+1.60L	3.213	+X	Bottom	0.5184	Min Temp %	0.5632	51.543	OK
Z-Z, +1.20D+1.60L+0.50S	8.150	-X	Bottom	0.5184	Min Temp %	0.5632	51.543	OK
Z-Z, +1.20D+1.60L+0.50S	8.150	+X	Bottom	0.5184	Min Temp %	0.5632	51.543	OK
Z-Z, +1.20D+1.60Lr+0.50L	2.113	-X	Bottom	0.5184	Min Temp %	0.5632	51.543	OK
Z-Z, +1.20D+1.60Lr+0.50L	2.113	+X	Bottom	0.5184	Min Temp %	0.5632	51.543	OK
Z-Z, +1.20D+1.60Lr	1.550	-X	Bottom	0.5184	Min Temp %	0.5632	51.543	OK
Z-Z, +1.20D+1.60Lr	1.550	+X	Bottom	0.5184	Min Temp %	0.5632	51.543	OK
Z-Z, +1.20D+0.50L+1.60S	17.913	-X	Bottom	0.5184	Min Temp %	0.5632	51.543	OK
Z-Z, +1.20D+0.50L+1.60S	17.913	+X	Bottom	0.5184	Min Temp %	0.5632	51.543	OK
Z-Z, +1.20D+1.60S	17.350	-X	Bottom	0.5184	Min Temp %	0.5632	51.543	OK
Z-Z, +1.20D+1.60S	17.350	+X	Bottom	0.5184	Min Temp %	0.5632	51.543	OK
Z-Z, +1.20D+0.50Lr+0.50L	1.975	-X	Bottom	0.5184	Min Temp %	0.5632	51.543	OK
Z-Z, +1.20D+0.50Lr+0.50L	1.975	+X	Bottom	0.5184	Min Temp %	0.5632	51.543	OK
Z-Z, +1.20D+0.50L+0.50S	6.913	-X	Bottom	0.5184	Min Temp %	0.5632	51.543	OK
Z-Z, +1.20D+0.50L+0.50S	6.913	+X	Bottom	0.5184	Min Temp %	0.5632	51.543	OK
Z-Z, +1.20D+0.50L+0.20S	3.913	-X	Bottom	0.5184	Min Temp %	0.5632	51.543	OK
Z-Z, +1.20D+0.50L+0.20S	3.913	+X	Bottom	0.5184	Min Temp %	0.5632	51.543	OK
Z-Z, +0.90D	1.013	-X	Bottom	0.5184	Min Temp %	0.5632	51.543	OK
Z-Z, +0.90D	1.013	+X	Bottom	0.5184	Min Temp %	0.5632	51.543	OK

One Way Shear

Load Combination...	Vu @ -X	Vu @ +X	Vu @ -Z	Vu @ +Z	Vu:Max	Phi Vn	Vu / Phi*Vn	Status
+1.40D	1.73 psi	1.73 psi	1.73 psi	1.73 psi	1.73 psi	85.00 psi	0.02	0.00
+1.20D+0.50Lr+1.60L	3.54 psi	3.54 psi	3.54 psi	3.54 psi	3.54 psi	85.00 psi	0.04	0.00
+1.20D+1.60L+0.50S	8.97 psi	8.97 psi	8.97 psi	8.97 psi	8.97 psi	85.00 psi	0.11	0.00
+1.20D+1.60Lr+0.50L	2.33 psi	2.33 psi	2.33 psi	2.33 psi	2.33 psi	85.00 psi	0.03	0.00
+1.20D+1.60Lr	1.71 psi	1.71 psi	1.71 psi	1.71 psi	1.71 psi	85.00 psi	0.02	0.00
+1.20D+0.50L+1.60S	19.71 psi	19.71 psi	19.71 psi	19.71 psi	19.71 psi	85.00 psi	0.23	0.00
+1.20D+1.60S	19.09 psi	19.09 psi	19.09 psi	19.09 psi	19.09 psi	85.00 psi	0.22	0.00
+1.20D+0.50Lr+0.50L	2.17 psi	2.17 psi	2.17 psi	2.17 psi	2.17 psi	85.00 psi	0.03	0.00
+1.20D+0.50L+0.50S	7.61 psi	7.61 psi	7.61 psi	7.61 psi	7.61 psi	85.00 psi	0.09	0.00
+1.20D+0.50L+0.20S	4.31 psi	4.31 psi	4.31 psi	4.31 psi	4.31 psi	85.00 psi	0.05	0.00
+0.90D	1.11 psi	1.11 psi	1.11 psi	1.11 psi	1.11 psi	85.00 psi	0.01	0.00

Two-Way "Punching" Shear

All units k

Load Combination...	Vu	Phi*Vn	Vu / Phi*Vn	Status
+1.40D	6.64 psi	170.00 psi	0.03903	OK
+1.20D+0.50Lr+1.60L	13.53 psi	170.00 psi	0.07961	OK
+1.20D+1.60L+0.50S	34.33 psi	170.00 psi	0.202	OK
+1.20D+1.60Lr+0.50L	8.90 psi	170.00 psi	0.05235	OK
+1.20D+1.60Lr	6.53 psi	170.00 psi	0.03841	OK
+1.20D+0.50L+1.60S	75.46 psi	170.00 psi	0.4439	OK
+1.20D+1.60S	73.09 psi	170.00 psi	0.4299	OK
+1.20D+0.50Lr+0.50L	8.32 psi	170.00 psi	0.04894	OK
+1.20D+0.50L+0.50S	29.12 psi	170.00 psi	0.1713	OK
+1.20D+0.50L+0.20S	16.48 psi	170.00 psi	0.09695	OK
+0.90D	4.27 psi	170.00 psi	0.02509	OK

RICHMOND HOFFMAYER INC.
STRUCTURAL ENGINEERING

Project Title: VILLAGE NEST
Engineer: JJH
Project Descr: MULTI UNIT PROJECT

Project ID: 2017-0610
26

Printed: 11 JUL 2017, 3:27PM

General Footing

File = d:\ENERCALC Projects\2017-0610.ec6
ENERCALC, INC. 1983-2017, Build:10.17.6.29, Ver:10.17.6.29
Lic. # : KW-06002886 Licensee : RICHMOND HOFFMAYER

Description : MAX EXTERIOR PAD FOOTING: 6" HSS

Code References

Calculations per ACI 318-14, IBC 2015, CBC 2016, ASCE 7-10
Load Combinations Used : ASCE 7-10

General Information

Material Properties

f'c : Concrete 28 day strength	=	2.50 ksi
fy : Rebar Yield	=	60.0 ksi
Ec : Concrete Elastic Modulus	=	3,122.0 ksi
Concrete Density	=	145.0 pcf
φ Values Flexure	=	0.90
Shear	=	0.850

Analysis Settings

Min Steel % Bending Reinf.	=	
Min Allow % Temp Reinf.	=	0.00180
Min. Overturning Safety Factor	=	1.50 : 1
Min. Sliding Safety Factor	=	1.50 : 1
Add Ftg Wt for Soil Pressure	:	No
Use ftg wt for stability, moments & shears	:	No
Add Pedestal Wt for Soil Pressure	:	No
Use Pedestal wt for stability, mom & shear	:	No

Soil Design Values

Allowable Soil Bearing	=	2.50 ksf
Increase Bearing By Footing Weight	=	No
Soil Passive Resistance (for Sliding)	=	180.0 pcf
Soil/Concrete Friction Coeff.	=	0.450

Increases based on footing Depth

Footing base depth below soil surface	=	2.0 ft
Allow press. increase per foot of depth	=	ksf
when footing base is below	=	ft

Increases based on footing plan dimension

Allowable pressure increase per foot of depth	=	ksf
when max. length or width is greater than	=	ft

Dimensions

Width parallel to X-X Axis	=	5.0 ft
Length parallel to Z-Z Axis	=	5.0 ft
Footing Thickness	=	18.0 in

Pedestal dimensions...

px : parallel to X-X Axis	=	in
pz : parallel to Z-Z Axis	=	in
Height	=	in

Rebar Centerline to Edge of Concrete...

at Bottom of footing	=	3.0 in

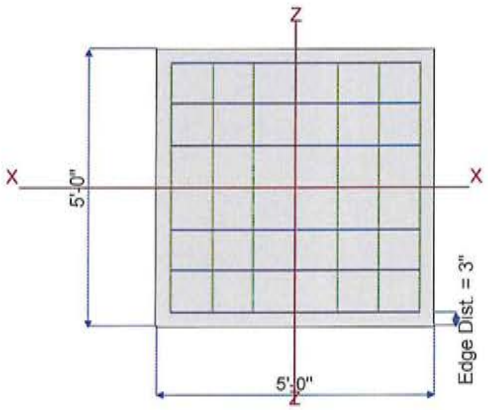

Reinforcing

Bars parallel to X-X Axis			
Number of Bars	=		7.0
Reinforcing Bar Size	=	#	5
Bars parallel to Z-Z Axis			
Number of Bars	=		7.0
Reinforcing Bar Size	=	#	5

Bandwidth Distribution Check (ACI 15.4.4.2)

Direction Requiring Closer Separation	n/a
# Bars required within zone	n/a
# Bars required on each side of zone	n/a

X-X Section Looking to +Z

Z-Z Section Looking to +X

Applied Loads

		D	Lr	L	S	W	E	H	
P : Column Load	=	3.807	4.015		49.381				k
OB : Overburden	=								ksf
M-xx	=								k-ft
M-zz	=								k-ft
V-x	=								k
V-z	=								k

General Footing

File = d:\ENERCALC Projects\2017-0610.ec6
ENERCALC, INC. 1983-2017, Build:10.17.6.29, Ver:10.17.6.29
Lic. # : KW-06002886 Licensee : RICHMOND HOFFMAYER

Description : MAX EXTERIOR PAD FOOTING: 6" HSS

DESIGN SUMMARY

Design OK

	Min. Ratio	Item	Applied	Capacity	Governing Load Combination
PASS	0.8732	Soil Bearing	2.183 ksf	2.50 ksf	+D+S about Z-Z axis
PASS	n/a	Overturning - X-X	0.0 k-ft	0.0 k-ft	No Overturning
PASS	n/a	Overturning - Z-Z	0.0 k-ft	0.0 k-ft	No Overturning
PASS	n/a	Sliding - X-X	0.0 k	0.0 k	No Sliding
PASS	n/a	Sliding - Z-Z	0.0 k	0.0 k	No Sliding
PASS	n/a	Uplift	0.0 k	0.0 k	No Uplift
PASS	0.3692	Z Flexure (+X)	10.447 k-ft/ft	28.298 k-ft/ft	+1.20D+1.60S
PASS	0.3692	Z Flexure (-X)	10.447 k-ft/ft	28.298 k-ft/ft	+1.20D+1.60S
PASS	0.3692	X Flexure (+Z)	10.447 k-ft/ft	28.298 k-ft/ft	+1.20D+1.60S
PASS	0.3692	X Flexure (-Z)	10.447 k-ft/ft	28.298 k-ft/ft	+1.20D+1.60S
PASS	0.2731	1-way Shear (+X)	23.216 psi	85.0 psi	+1.20D+1.60S
PASS	0.2731	1-way Shear (-X)	23.216 psi	85.0 psi	+1.20D+1.60S
PASS	0.2731	1-way Shear (+Z)	23.216 psi	85.0 psi	+1.20D+1.60S
PASS	0.2731	1-way Shear (-Z)	23.216 psi	85.0 psi	+1.20D+1.60S
PASS	0.5074	2-way Punching	86.261 psi	170.0 psi	+1.20D+1.60S

Detailed Results

Soil Bearing

Rotation Axis & Load Combination...	Gross Allowable	Xecc (in)	Zecc (in)	Actual Soil Bearing Stress @ Location Bottom, -Z	Top, +Z	Left, -X	Right, +X	Actual / Allow Ratio
X-X, D Only	2.50	n/a	0.0	0.2073	0.2073	n/a	n/a	0.083
X-X, +D+Lr	2.50	n/a	0.0	0.3679	0.3679	n/a	n/a	0.147
X-X, +D+S	2.50	n/a	0.0	2.183	2.183	n/a	n/a	0.873
X-X, +D+0.750Lr	2.50	n/a	0.0	0.3277	0.3277	n/a	n/a	0.131
X-X, +D+0.750S	2.50	n/a	0.0	1.689	1.689	n/a	n/a	0.676
X-X, +0.60D	2.50	n/a	0.0	0.1244	0.1244	n/a	n/a	0.050
Z-Z, D Only	2.50	0.0	n/a	n/a	n/a	0.2073	0.2073	0.083
Z-Z, +D+Lr	2.50	0.0	n/a	n/a	n/a	0.3679	0.3679	0.147
Z-Z, +D+S	2.50	0.0	n/a	n/a	n/a	2.183	2.183	0.873
Z-Z, +D+0.750Lr	2.50	0.0	n/a	n/a	n/a	0.3277	0.3277	0.131
Z-Z, +D+0.750S	2.50	0.0	n/a	n/a	n/a	1.689	1.689	0.676
Z-Z, +0.60D	2.50	0.0	n/a	n/a	n/a	0.1244	0.1244	0.050

Footing Flexure

Flexure Axis & Load Combination	Mu k-ft	Side	Tension Surface	As Req'd in^2	Gvrn. As in^2	Actual As in^2	Phi*Mn k-ft	Status
X-X, +1.40D	0.6662	+Z	Bottom	0.3888	Min Temp %	0.4340	28.298	OK
X-X, +1.40D	0.6662	-Z	Bottom	0.3888	Min Temp %	0.4340	28.298	OK
X-X, +1.20D+0.50Lr	0.8220	+Z	Bottom	0.3888	Min Temp %	0.4340	28.298	OK
X-X, +1.20D+0.50Lr	0.8220	-Z	Bottom	0.3888	Min Temp %	0.4340	28.298	OK
X-X, +1.20D+0.50S	3.657	+Z	Bottom	0.3888	Min Temp %	0.4340	28.298	OK
X-X, +1.20D+0.50S	3.657	-Z	Bottom	0.3888	Min Temp %	0.4340	28.298	OK
X-X, +1.20D+1.60Lr	1.374	+Z	Bottom	0.3888	Min Temp %	0.4340	28.298	OK
X-X, +1.20D+1.60Lr	1.374	-Z	Bottom	0.3888	Min Temp %	0.4340	28.298	OK
X-X, +1.20D+1.60S	10.447	+Z	Bottom	0.3888	Min Temp %	0.4340	28.298	OK
X-X, +1.20D+1.60S	10.447	-Z	Bottom	0.3888	Min Temp %	0.4340	28.298	OK
X-X, +1.20D+0.20S	1.806	+Z	Bottom	0.3888	Min Temp %	0.4340	28.298	OK
X-X, +1.20D+0.20S	1.806	-Z	Bottom	0.3888	Min Temp %	0.4340	28.298	OK
X-X, +0.90D	0.4283	+Z	Bottom	0.3888	Min Temp %	0.4340	28.298	OK
X-X, +0.90D	0.4283	-Z	Bottom	0.3888	Min Temp %	0.4340	28.298	OK
Z-Z, +1.40D	0.6662	-X	Bottom	0.3888	Min Temp %	0.4340	28.298	OK
Z-Z, +1.40D	0.6662	+X	Bottom	0.3888	Min Temp %	0.4340	28.298	OK
Z-Z, +1.20D+0.50Lr	0.8220	-X	Bottom	0.3888	Min Temp %	0.4340	28.298	OK
Z-Z, +1.20D+0.50Lr	0.8220	+X	Bottom	0.3888	Min Temp %	0.4340	28.298	OK
Z-Z, +1.20D+0.50S	3.657	-X	Bottom	0.3888	Min Temp %	0.4340	28.298	OK
Z-Z, +1.20D+0.50S	3.657	+X	Bottom	0.3888	Min Temp %	0.4340	28.298	OK
Z-Z, +1.20D+1.60Lr	1.374	-X	Bottom	0.3888	Min Temp %	0.4340	28.298	OK
Z-Z, +1.20D+1.60Lr	1.374	+X	Bottom	0.3888	Min Temp %	0.4340	28.298	OK
Z-Z, +1.20D+1.60S	10.447	-X	Bottom	0.3888	Min Temp %	0.4340	28.298	OK
Z-Z, +1.20D+1.60S	10.447	+X	Bottom	0.3888	Min Temp %	0.4340	28.298	OK

RICHMOND HOFFMAYER INC.
STRUCTURAL ENGINEERING

Project Title: VILLAGE NEST
Engineer: JJH
Project Descr: MULTI UNIT PROJECT

Project ID: 2017-0610
27

Printed: 11 JUL 2017, 3:27PM

General Footing

File = d:\ENERCALC Projects\2017-0610.ec6
ENERCALC, INC. 1983-2017, Build:10.17.6.29, Ver:10.17.6.29

Lic. # : KW-06002886 — Licensee : RICHMOND HOFFMAYER

Description : MAX EXTERIOR PAD FOOTING: 6" HSS

Footing Flexure

Flexure Axis & Load Combination	Mu k-ft	Side	Tension Surface	As Req'd in^2	Gvrn. As in^2	Actual As in^2	Phi*Mn k-ft	Status
Z-Z, +1.20D+0.20S	1.806	-X	Bottom	0.3888	Min Temp %	0.4340	28.298	OK
Z-Z, +1.20D+0.20S	1.806	+X	Bottom	0.3888	Min Temp %	0.4340	28.298	OK
Z-Z, +0.90D	0.4283	-X	Bottom	0.3888	Min Temp %	0.4340	28.298	OK
Z-Z, +0.90D	0.4283	+X	Bottom	0.3888	Min Temp %	0.4340	28.298	OK

One Way Shear

Load Combination...	Vu @ -X	Vu @ +X	Vu @ -Z	Vu @ +Z	Vu:Max	Phi Vn	Vu / Phi*Vn	Status
+1.40D	1.48 psi	1.48 psi	1.48 psi	1.48 psi	1.48 psi	85.00 psi	0.02	0.00
+1.20D+0.50Lr	1.83 psi	1.83 psi	1.83 psi	1.83 psi	1.83 psi	85.00 psi	0.02	0.00
+1.20D+0.50S	8.13 psi	8.13 psi	8.13 psi	8.13 psi	8.13 psi	85.00 psi	0.10	0.00
+1.20D+1.60Lr	3.05 psi	3.05 psi	3.05 psi	3.05 psi	3.05 psi	85.00 psi	0.04	0.00
+1.20D+1.60S	23.22 psi	23.22 psi	23.22 psi	23.22 psi	23.22 psi	85.00 psi	0.27	0.00
+1.20D+0.20S	4.01 psi	4.01 psi	4.01 psi	4.01 psi	4.01 psi	85.00 psi	0.05	0.00
+0.90D	0.95 psi	0.95 psi	0.95 psi	0.95 psi	0.95 psi	85.00 psi	0.01	0.00

Two-Way "Punching" Shear

All units k

Load Combination...	Vu	Phi*Vn	Vu / Phi*Vn	Status
+1.40D	5.50 psi	170.00 psi	0.03236	OK
+1.20D+0.50Lr	6.79 psi	170.00 psi	0.03992	OK
+1.20D+0.50S	30.20 psi	170.00 psi	0.1776	OK
+1.20D+1.60Lr	11.35 psi	170.00 psi	0.06674	OK
+1.20D+1.60S	86.26 psi	170.00 psi	0.5074	OK
+1.20D+0.20S	14.91 psi	170.00 psi	0.0877	OK
+0.90D	3.54 psi	170.00 psi	0.0208	OK

RICHMOND HOFFMAYER INC.
STRUCTURAL ENGINEERING

Project Title: VILLAGE NEST
Engineer: JJH
Project Descr: MULTI UNIT PROJECT

Project ID: 2017-0610
26-e

Printed: 11 JUL 2017, 3:44PM

Steel Beam

File = d:\ENERCALC Projects\2017-0610.ec6
ENERCALC, INC. 1983-2017, Build:10.17.6.29, Ver:10.17.6.29
Lic. # : KW-06002886 Licensee : RICHMOND HOFFMAYER

Description : FELDSPAR UVN LOWER FLOOR - B22

NOT APPLICABLE

CODE REFERENCES

Calculations per AISC 360-10, IBC 2015, ASCE 7-10
Load Combination Set : ASCE 7-10

Material Properties

Analysis Method : Allowable Strength Design
Beam Bracing : Beam is Fully Braced against lateral-torsional buckling
Bending Axis : Major Axis Bending

Fy : Steel Yield : 50.0 ksi
E: Modulus : 29,000.0 ksi

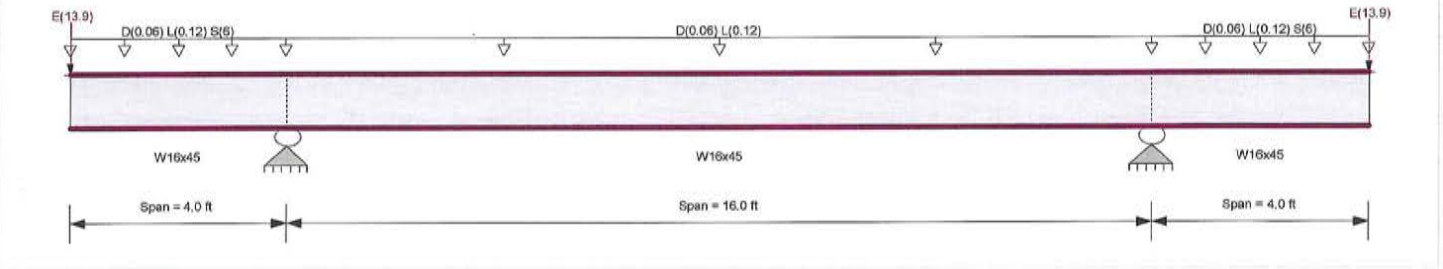

Applied Loads

Service loads entered. Load Factors will be applied for calculations.

Beam self weight calculated and added to loading
Load for Span Number 1
Uniform Load : D = 0.020, L = 0.040, S = 2.0 ksf, Tributary Width = 3.0 ft, (FLOOR)
Point Load : E = 13.90 k @ 0.0 ft, (HOLD DOWN OVERSTRENGTH)
Load for Span Number 2
Uniform Load : D = 0.020, L = 0.040 ksf, Tributary Width = 3.0 ft, (FLOOR)
Load for Span Number 3
Uniform Load : D = 0.020, L = 0.040, S = 2.0 ksf, Tributary Width = 3.0 ft, (FLOOR)
Point Load : E = 13.90 k @ 4.0 ft, (HOLD DOWN OVERSTRENGTH)

DESIGN SUMMARY

Design OK

Maximum Bending Stress Ratio =	0.325 : 1	Maximum Shear Stress Ratio =	0.235 : 1
Section used for this span	W16x45	Section used for this span	W16x45
Ma : Applied	66.750 k-ft	Va : Applied	26.078 k
Mn / Omega : Allowable	205.339 k-ft	Vn/Omega : Allowable	111.090 k
Load Combination	+D+0.750L+0.750S+0.5250E	Load Combination	+D+0.750L+0.750S+0.5250E
Location of maximum on span	16.000ft	Location of maximum on span	16.000 ft
Span # where maximum occurs	Span # 2	Span # where maximum occurs	Span # 2

Maximum Deflection

Max Downward Transient Deflection	0.211 in	Ratio =	454 >=360
Max Upward Transient Deflection	-0.183 in	Ratio =	1,047 >=360
Max Downward Total Deflection	0.235 in	Ratio =	409 >=240.
Max Upward Total Deflection	-0.203 in	Ratio =	946 >=240.

Maximum Forces & Stresses for Load Combinations

Load Combination / Segment Length	Span #	Max Stress Ratios M	Max Stress Ratios V	Summary of Moment Values Mmax +	Mmax -	Ma Max	Mnx	Mnx/Omega	Cb	Rm	Summary of Shear Values Va Max	Vnx	Vnx/Omega
D Only													
Dsgn. L = 4.00 ft	1	0.004	0.008		-0.84	0.84	342.92	205.34	1.00	1.00	0.84	166.64	111.09
Dsgn. L = 16.00 ft	2	0.012	0.008	2.52	-0.84	2.52	342.92	205.34	1.00	1.00	0.84	166.64	111.09
Dsgn. L = 4.00 ft	3	0.004	0.004		-0.84	0.84	342.92	205.34	1.00	1.00	0.42	166.64	111.09
+D+L													
Dsgn. L = 4.00 ft	1	0.009	0.016		-1.80	1.80	342.92	205.34	1.00	1.00	1.80	166.64	111.09
Dsgn. L = 16.00 ft	2	0.026	0.016	5.40	-1.80	5.40	342.92	205.34	1.00	1.00	1.80	166.64	111.09
Dsgn. L = 4.00 ft	3	0.009	0.008		-1.80	1.80	342.92	205.34	1.00	1.00	0.90	166.64	111.09
+D+S													
Dsgn. L = 4.00 ft	1	0.238	0.220		-48.84	48.84	342.92	205.34	1.00	1.00	24.42	166.64	111.09
Dsgn. L = 16.00 ft	2	0.238	0.220	-0.00	-48.84	48.84	342.92	205.34	1.00	1.00	24.42	166.64	111.09
Dsgn. L = 4.00 ft	3	0.238	0.220		-48.84	48.84	342.92	205.34	1.00	1.00	24.42	166.64	111.09
+D+0.750L													
Dsgn. L = 4.00 ft	1	0.008	0.014		-1.56	1.56	342.92	205.34	1.00	1.00	1.56	166.64	111.09
Dsgn. L = 16.00 ft	2	0.023	0.014	4.68	-1.56	4.68	342.92	205.34	1.00	1.00	1.56	166.64	111.09
Dsgn. L = 4.00 ft	3	0.008	0.007		-1.56	1.56	342.92	205.34	1.00	1.00	0.78	166.64	111.09
+D+0.750L+0.750S													
Dsgn. L = 4.00 ft	1	0.183	0.169		-37.56	37.56	342.92	205.34	1.00	1.00	18.78	166.64	111.09

Steel Beam

File = d:\ENERCALC Projects\2017-0610.ec6
ENERCALC, INC. 1983-2017, Build:10.17.6.29, Ver:10.17.6.29
Lic. # : KW-06002886 Licensee : RICHMOND HOFFMAYER

Description : FELDSPAR UVN LOWER FLOOR - B22

Load Combination / Segment Length	Span #	Max Stress Ratios M	V	Summary of Moment Values Mmax +	Mmax -	Ma Max	Mnx	Mnx/Omega	Cb	Rm	Summary of Shear Values Va Max	Vnx	Vnx/Omega
Dsgn. L = 16.00 ft	2	0.183	0.169	-0.00	-37.56	37.56	342.92	205.34	1.00	1.00	18.78	166.64	111.09
Dsgn. L = 4.00 ft	3	0.183	0.169		-37.56	37.56	342.92	205.34	1.00	1.00	18.78	166.64	111.09
+D+0.70E													
Dsgn. L = 4.00 ft	1	0.194	0.091		-39.76	39.76	342.92	205.34	1.00	1.00	10.15	166.64	111.09
Dsgn. L = 16.00 ft	2	0.194	0.091	-0.00	-39.76	39.76	342.92	205.34	1.00	1.00	10.15	166.64	111.09
Dsgn. L = 4.00 ft	3	0.194	0.091		-39.76	39.76	342.92	205.34	1.00	1.00	10.15	166.64	111.09
+D-0.70E													
Dsgn. L = 4.00 ft	1	0.185	0.088	38.08		38.08	342.92	205.34	1.00	1.00	9.73	166.64	111.09
Dsgn. L = 16.00 ft	2	0.202	0.084	41.44	38.08	41.44	342.92	205.34	1.00	1.00	9.31	166.64	111.09
Dsgn. L = 4.00 ft	3	0.185	0.088	38.08		38.08	342.92	205.34	1.00	1.00	9.73	166.64	111.09
+D+0.750L+0.750S+0.5250E													
Dsgn. L = 4.00 ft	1	0.325	0.235		-66.75	66.75	342.92	205.34	1.00	1.00	26.08	166.64	111.09
Dsgn. L = 16.00 ft	2	0.325	0.235	-0.00	-66.75	66.75	342.92	205.34	1.00	1.00	26.08	166.64	111.09
Dsgn. L = 4.00 ft	3	0.325	0.235		-66.75	66.75	342.92	205.34	1.00	1.00	26.08	166.64	111.09
+D+0.750L+0.750S-0.5250E													
Dsgn. L = 4.00 ft	1	0.041	0.103	5.67	-8.37	8.37	342.92	205.34	1.00	1.00	11.48	166.64	111.09
Dsgn. L = 16.00 ft	2	0.041	0.103	-0.00	-8.37	8.37	342.92	205.34	1.00	1.00	11.48	166.64	111.09
Dsgn. L = 4.00 ft	3	0.041	0.103	5.67	-8.37	8.37	342.92	205.34	1.00	1.00	11.48	166.64	111.09
+0.60D													
Dsgn. L = 4.00 ft	1	0.002	0.005		-0.50	0.50	342.92	205.34	1.00	1.00	0.50	166.64	111.09
Dsgn. L = 16.00 ft	2	0.007	0.005	1.51	-0.50	1.51	342.92	205.34	1.00	1.00	0.50	166.64	111.09
Dsgn. L = 4.00 ft	3	0.002	0.002		-0.50	0.50	342.92	205.34	1.00	1.00	0.25	166.64	111.09
+0.60D+0.70E													
Dsgn. L = 4.00 ft	1	0.192	0.090		-39.42	39.42	342.92	205.34	1.00	1.00	9.98	166.64	111.09
Dsgn. L = 16.00 ft	2	0.192	0.090	-0.00	-39.42	39.42	342.92	205.34	1.00	1.00	9.98	166.64	111.09
Dsgn. L = 4.00 ft	3	0.192	0.090		-39.42	39.42	342.92	205.34	1.00	1.00	9.98	166.64	111.09
+0.60D-0.70E													
Dsgn. L = 4.00 ft	1	0.187	0.088	38.42		38.42	342.92	205.34	1.00	1.00	9.73	166.64	111.09
Dsgn. L = 16.00 ft	2	0.197	0.085	40.43	38.42	40.43	342.92	205.34	1.00	1.00	9.48	166.64	111.09
Dsgn. L = 4.00 ft	3	0.187	0.088	38.42		38.42	342.92	205.34	1.00	1.00	9.73	166.64	111.09

Overall Maximum Deflections

Load Combination	Span	Max. "-" Defl	Location in Span	Load Combination	Max. "+" Defl	Location in Span
+D+0.750L+0.750S+0.5250E	1	0.2349	0.000		0.0000	0.000
	2	0.0000	0.000	+D+0.750L+0.750S+0.5250E	-0.2030	8.000
+D+0.750L+0.750S+0.5250E	3	0.2346	4.000		0.0000	8.000

Vertical Reactions

Support notation : Far left is #1 Values in KIPS

Load Combination	Support 1	Support 2	Support 3	Support 4
Overall MAXimum		27.638	27.638	
Overall MINimum		0.756	0.756	
D Only		1.260	1.260	
+D+L		2.700	2.700	
+D+S		25.260	25.260	
+D+0.750L		2.340	2.340	
+D+0.750L+0.750S		20.340	20.340	
+D+0.70E		10.990	10.990	
+D+0.750L+0.750S+0.5250E		27.638	27.638	
+0.60D		0.756	0.756	
+0.60D+0.70E		10.486	10.486	
L Only		1.440	1.440	
S Only		24.000	24.000	
E Only		13.900	13.900	

NOT APPLICABLE

RICHMOND HOFFMAYER INC.
STRUCTURAL ENGINEERING

Project Title: VILLAGE NEST
Engineer: JJH
Project Descr: MULTI UNIT PROJECT

Project ID: 2017-0610

270

Printed: 11 JUL 2017, 3:46PM

Concrete Column

File = d:\ENERCALC Projects\2017-0610.ec6
ENERCALC, INC. 1983-2017, Build:10.17.6.29, Ver:10.17.6.29
Lic. # : KW-06002886 Licensee : RICHMOND HOFFMAYER

Description : B22 SUPPORT

NOT APPLICABLE

Code References

Calculations per ACI 318-14, IBC 2015, CBC 2016, ASCE 7-10
Load Combinations Used : ASCE 7-10

General Information

f'c : Concrete 28 day strength	=	2.50 ksi
E =	=	3,122.0 ksi
Density	=	150.0 pcf
β	=	0.850
fy - Main Rebar	=	60.0 ksi
E - Main Rebar	=	29,000.0 ksi
Allow. Reinforcing Limits		ASTM A615 Bars Used
Min. Reinf.	=	1.0 %
Max. Reinf.	=	8.0 %

Overall Column Height = 6.0 ft
End Fixity: Top & Bottom Pinned

Brace condition for deflection (buckling) along columns :
X-X (width) axis :
Unbraced Length for X-X Axis buckling = 6.0 ft, K = 1.0
Y-Y (depth) axis :
Unbraced Length for X-X Axis buckling = 6.0 ft, K = 1.0

Column Cross Section

Column Dimensions : 12.0in Square Column, Column Edge to Rebar Edge Cover = 2.0in

Column Reinforcing : 4 - #6 bars @ corners,, 1 - #6 bars top & bottom between corner bars, 1 - #6 bars left & right between corner bars

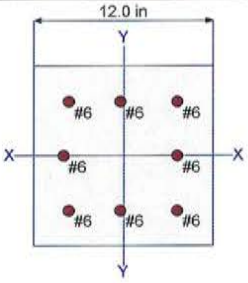

Applied Loads

Entered loads are factored per load combinations specified by user.

Column self weight included : 900.0 lbs * Dead Load Factor
AXIAL LOADS . . .
MAX: Axial Load at 6.0 ft above base, D = 10.0, LR = 10.0, L = 5.0, S = 90.0 k

DESIGN SUMMARY

Load Combination +1.20D+0.50L+1.60S
Location of max.above base 5.960 ft

Maximum Stress Ratio **0.604 : 1**
Ratio = (Pu^2+Mu^2)^.5 / (PhiPn^2+PhiMn^2)^.5

Pu =	159.580 k	φ * Pn =	264.051 k
Mu-x =	0.0 k-ft	φ * Mn-x =	0.0 k-ft
Mu-y =	12.766 k-ft	φ * Mn-y =	20.863 k-ft
Mu Angle =	90.0 deg		
Mu at Angle =	12.766 k-ft	φMn at Angle =	21.116 k-ft

Pn & Mn values located at Pu-Mu vector intersection with capacity curve

Column Capacities . . .

Pnmax : Nominal Max. Compressive Axial Capacity	509.72 k
Pnmin : Nominal Min. Tension Axial Capacity	-211.20 k
φ Pn, max : Usable Compressive Axial Capacity	265.054 k
φ Pn, min : Usable Tension Axial Capacity	-137.280 k

Maximum SERVICE Load Reactions . .

Top along Y-Y	0.0 k	Bottom along Y-Y	0.0 k
Top along X-X	0.0 k	Bottom along X-X	0.0 k

Maximum SERVICE Load Deflections . . .

Along Y-Y 0.0 in at 0.0 ft above base
for load combination :

Along X-X 0.0 in at 0.0 ft above base
for load combination :

General Section Information . φ = 0.650 β = 0.850 θ = 0.80

ρ : % Reinforcing	2.444 % Rebar % Ok
Reinforcing Area	3.520 in^2
Concrete Area	144.0 in^2

Governing Load Combination Results

Governing Factored Load Combination	Moment X-X	Moment Y-Y	Dist. from base ft	Axial Load k Pu	φ * Pn	δx	δx * Mux	δy	δy * Muy	Bending Analysis k-ft Alpha (deg)	δ Mu	φ Mn	Utilization Ratio
+1.40D		M2,min	5.96	15.26	264.05			1.000	1.22	90.000	1.22	21.12	0.058
+1.20D+0.50Lr+1.60L		M2,min	5.96	26.08	264.05			1.000	2.09	90.000	2.09	21.12	0.099
+1.20D+1.60L+0.50S		M2,min	5.96	66.08	264.05			1.000	5.29	90.000	5.29	21.12	0.250

RICHMOND HOFFMAYER INC.
STRUCTURAL ENGINEERING

Project Title: VILLAGE NEST
Engineer: JJH
Project Descr: MULTI UNIT PROJECT

Project ID: 2017-0610

271

Printed: 11 JUL 2017, 3:46PM

Concrete Column

File = d:\ENERCALC Projects\2017-0610.ec6
ENERCALC, INC. 1983-2017, Build:10.17.6.29, Ver:10.17.6.29

Lic. # : KW-06002886 Licensee : RICHMOND HOFFMAYER

Description : B22 SUPPORT

NOT APPLICABLE

Governing Load Combination Results

Governing Factored Load Combination	Moment X-X	Moment Y-Y	Dist. from base ft	Axial Load k Pu	φ * Pn	Bending Analysis k-ft δx	δx * Mux	δy	δy * Muy	Alpha (deg)	δ Mu	φ Mn	Utilization Ratio
+1.20D+1.60Lr+0.50L		M2,min	5.96	31.58	264.05			1.000	2.53	90.000	2.53	21.12	0.120
+1.20D+1.60Lr		M2,min	5.96	29.08	264.05			1.000	2.33	90.000	2.33	21.12	0.110
+1.20D+0.50L+1.60S		M2,min	5.96	159.58	264.05			1.000	12.77	90.000	12.77	21.12	0.604
+1.20D+1.60S		M2,min	5.96	157.08	264.05			1.000	12.57	90.000	12.57	21.12	0.595
+1.20D+0.50Lr+0.50L		M2,min	5.96	20.58	264.05			1.000	1.65	90.000	1.65	21.12	0.078
+1.20D+0.50L+0.50S		M2,min	5.96	60.58	264.05			1.000	4.85	90.000	4.85	21.12	0.229
+1.20D+0.50L+0.20S		M2,min	5.96	33.58	264.05			1.000	2.69	90.000	2.69	21.12	0.127
+0.90D		M2,min	5.96	9.81	264.05			1.000	0.78	90.000	0.78	21.12	0.037

Maximum Reactions

Note: Only non-zero reactions are listed.

Load Combination	X-X Axis Reaction k @ Base	@ Top	Y-Y Axis Reaction k @ Base	@ Top	Axial Reaction @ Base	My - End Moments k-ft @ Base	@ Top	Mx - End Moments @ Base	@ Top
D Only					10.900				
+D+L					15.900				
+D+Lr					20.900				
+D+S					100.900				
+D+0.750Lr+0.750L					22.150				
+D+0.750L+0.750S					82.150				
+0.60D					6.540				
Lr Only					10.000				
L Only					5.000				
S Only					90.000				

Maximum Moment Reactions

Note: Only non-zero reactions are listed.

Load Combination	Moment About X-X Axis @ Base	@ Top	Moment About Y-Y Axis @ Base	@ Top
D Only	k-ft		k-ft	
+D+L	k-ft		k-ft	
+D+Lr	k-ft		k-ft	
+D+S	k-ft		k-ft	
+D+0.750Lr+0.750L	k-ft		k-ft	
+D+0.750L+0.750S	k-ft		k-ft	
+0.60D	k-ft		k-ft	
Lr Only	k-ft		k-ft	
L Only	k-ft		k-ft	
S Only	k-ft		k-ft	

Maximum Deflections for Load Combinations

Load Combination	Max. X-X Deflection		Distance		Max. Y-Y Deflection		Distance	
D Only	0.0000	in	0.000	ft	0.000	in	0.000	ft
+D+L	0.0000	in	0.000	ft	0.000	in	0.000	ft
+D+Lr	0.0000	in	0.000	ft	0.000	in	0.000	ft
+D+S	0.0000	in	0.000	ft	0.000	in	0.000	ft
+D+0.750Lr+0.750L	0.0000	in	0.000	ft	0.000	in	0.000	ft
+D+0.750L+0.750S	0.0000	in	0.000	ft	0.000	in	0.000	ft
+0.60D	0.0000	in	0.000	ft	0.000	in	0.000	ft
Lr Only	0.0000	in	0.000	ft	0.000	in	0.000	ft
L Only	0.0000	in	0.000	ft	0.000	in	0.000	ft
S Only	0.0000	in	0.000	ft	0.000	in	0.000	ft

RICHMOND HOFFMAYER INC.
STRUCTURAL ENGINEERING

Project Title: VILLAGE NEST
Engineer: JJH
Project Descr: MULTI UNIT PROJECT

Project ID: 2017-0610

252

Printed: 11 JUL 2017, 3:46PM

Concrete Column

File = d:\ENERCALC Projects\2017-0610.ec6
ENERCALC, INC. 1983-2017, Build:10.17.6.29, Ver:10.17.6.29

Lic. # : KW-06002886
Licensee : RICHMOND HOFFMAYER

Description : B22 SUPPORT

NOT APPLICABLE

Sketches

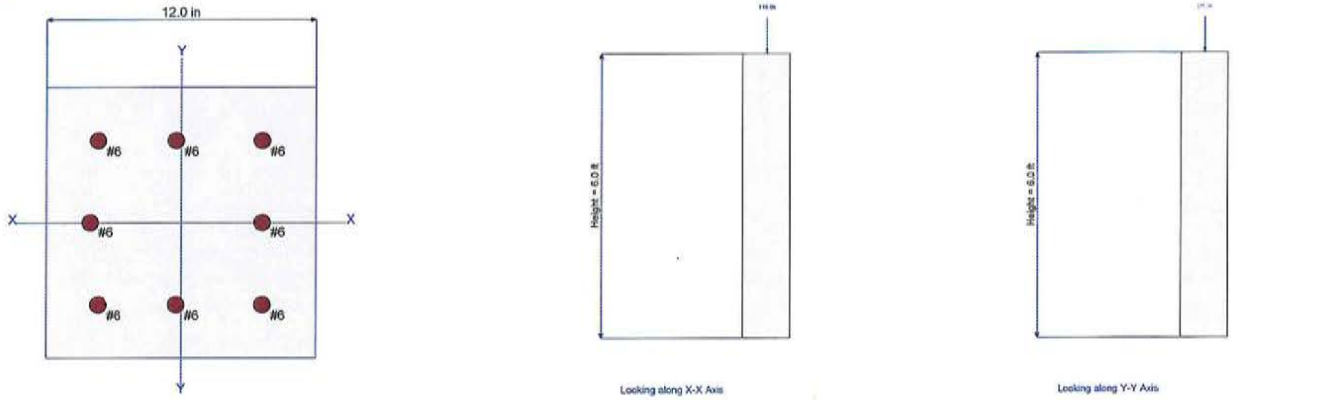

Interaction Diagrams

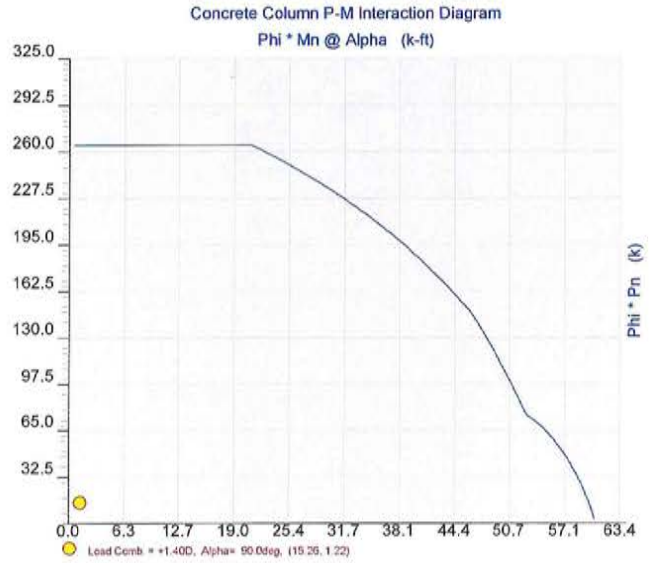

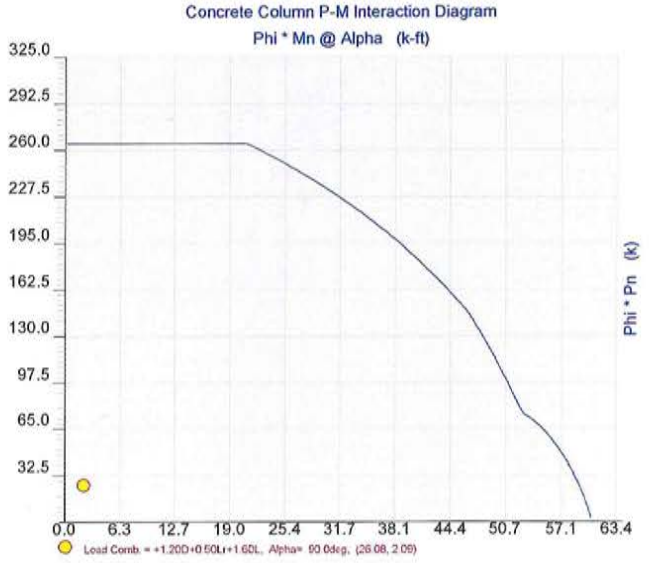

RICHMOND HOFFMAYER INC.
STRUCTURAL ENGINEERING

Project Title: VILLAGE NEST
Engineer: JJH
Project Descr: MULTI UNIT PROJECT

Project ID: 2017-0610

273

Printed: 11 JUL 2017, 3:46PM

Concrete Column

File = d:\ENERCALC Projects\2017-0610.ec6
ENERCALC, INC. 1983-2017, Build:10.17.6.29, Ver:10.17.6.29

Lic. # : KW-06002886
Licensee : RICHMOND HOFFMAYER

Description : B22 SUPPORT

NOT APPLICABLE

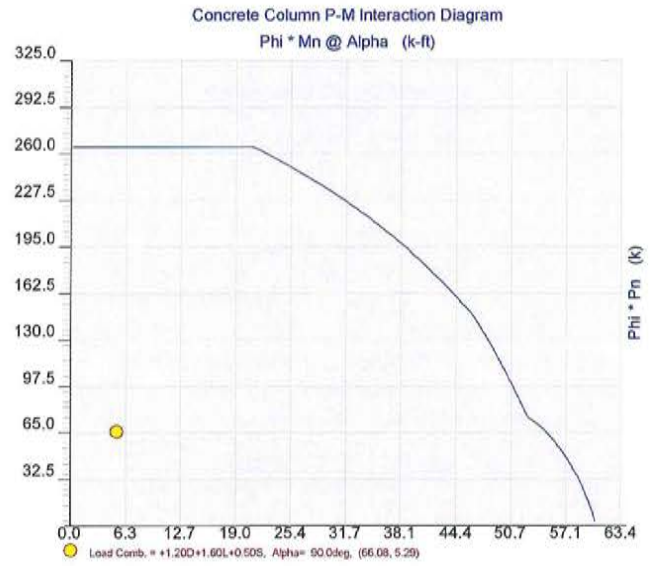

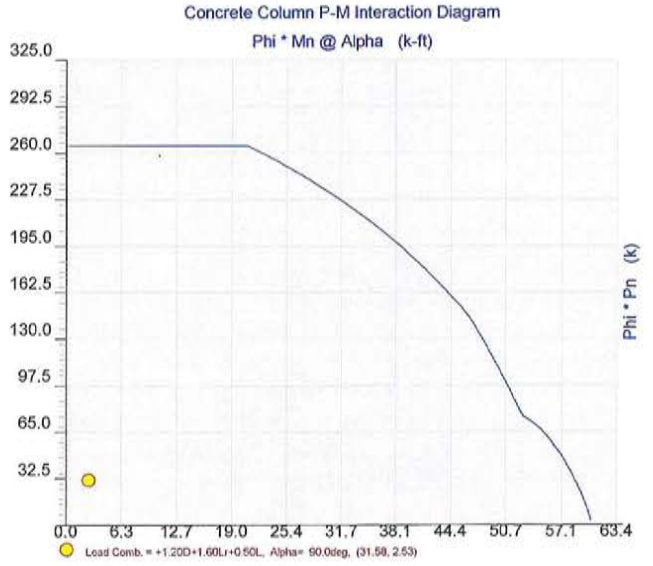

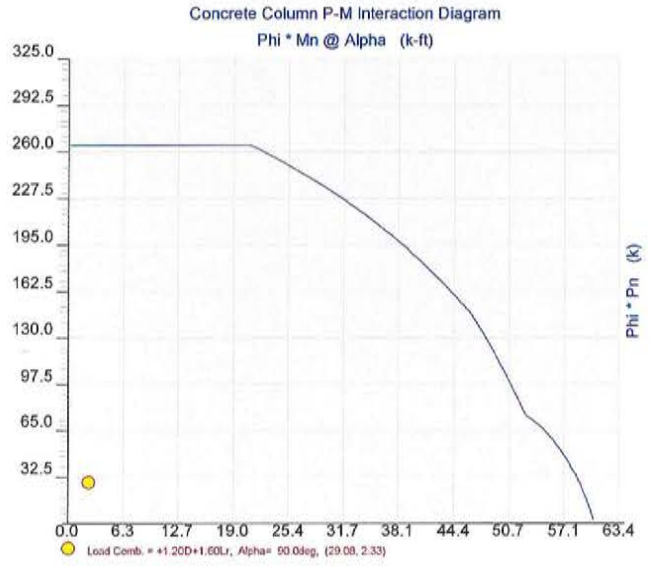

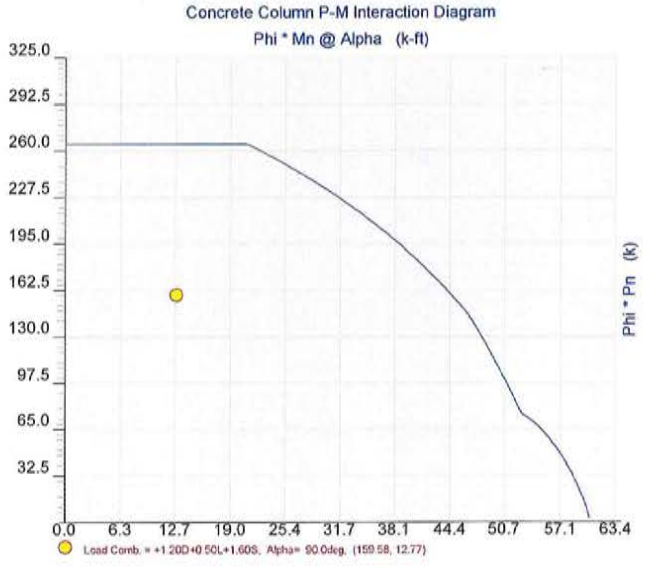

RICHMOND HOFFMAYER INC.
STRUCTURAL ENGINEERING

Project Title: VILLAGE NEST
Engineer: JJH
Project Descr: MULTI UNIT PROJECT

Project ID: 2017-0610

274

Printed: 11 JUL 2017, 3:46PM

Concrete Column

File = d:\ENERCALC Projects\2017-0610.ec6
ENERCALC, INC. 1983-2017, Build:10.17.6.29, Ver:10.17.6.29

Lic. # : KW-06002886
Licensee : RICHMOND HOFFMAYER

Description : B22 SUPPORT

NOT APPLICABLE

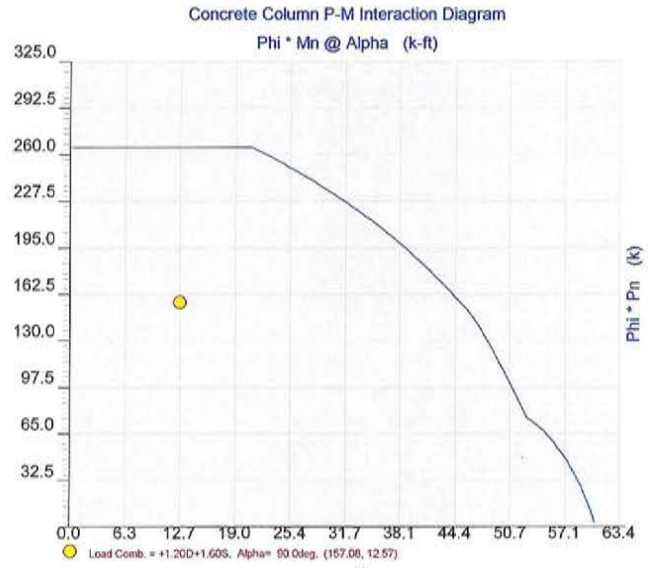

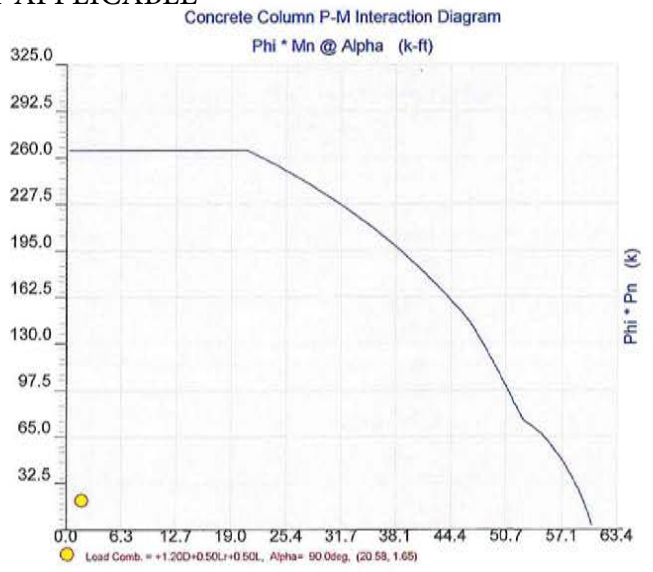

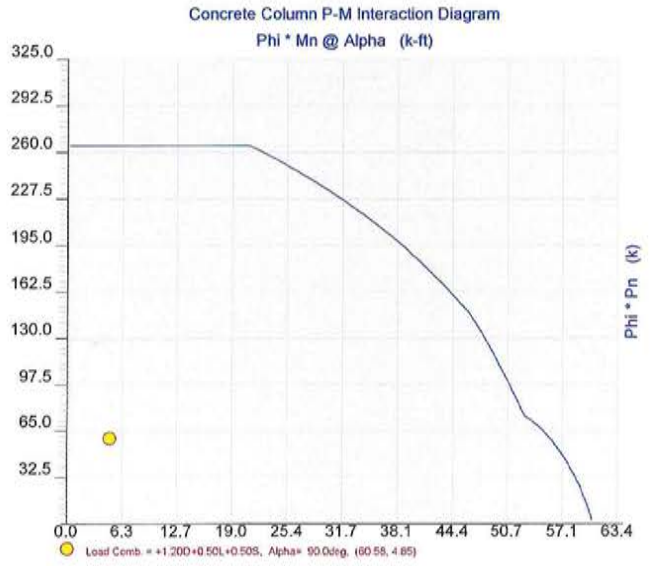

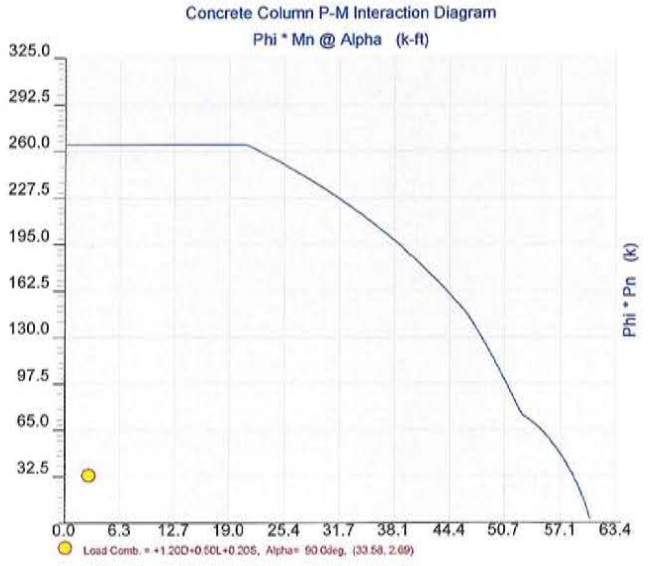

Concrete Column

Description : B22 SUPPORT

NOT APPLICABLE

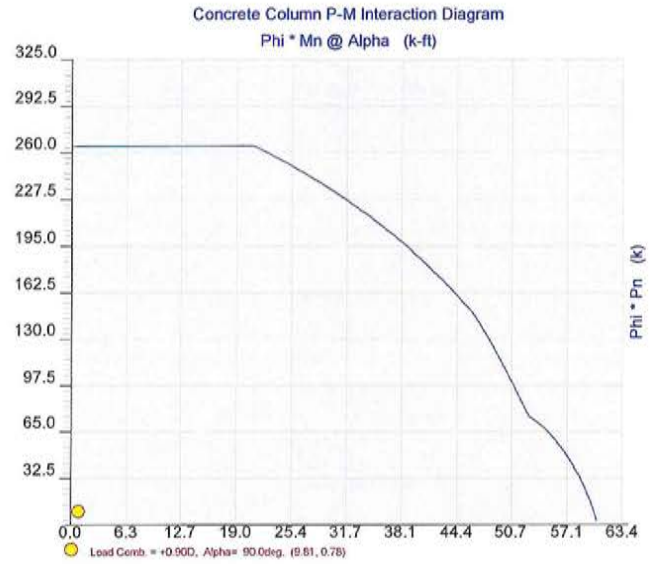

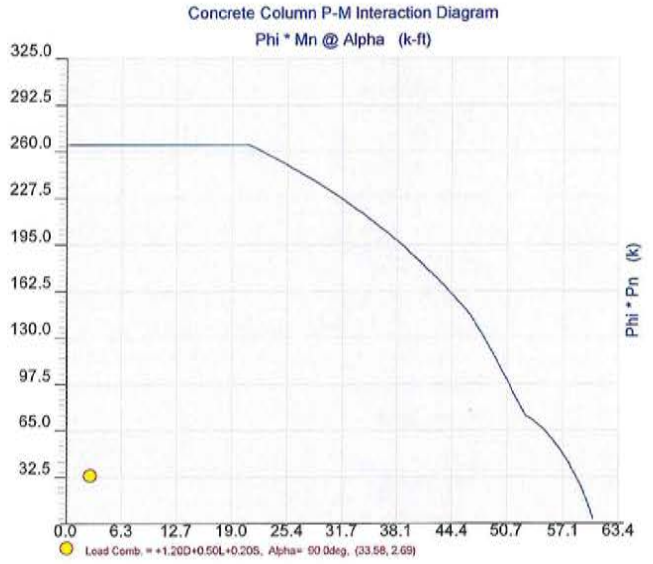

RICHMOND HOFFMAYER INC.
STRUCTURAL ENGINEERING

Project Title: VILLAGE NEST
Engineer: JJH
Project Descr: MULTI UNIT PROJECT

Project ID: 2017-0610

276

Printed: 11 JUL 2017, 3:49PM

General Footing

File = d:\ENERCALC Projects\2017-0610.ec6
ENERCALC, INC. 1983-2017, Build:10.17.6.29, Ver:10.17.6.29
Lic. # : KW-06002886 Licensee : RICHMOND HOFFMAYER

Description : MAX PAD: FELDSPAR UVN

NOT APPLICABLE

Code References

Calculations per ACI 318-14, IBC 2015, CBC 2016, ASCE 7-10
Load Combinations Used : ASCE 7-10

General Information

Material Properties

f'c : Concrete 28 day strength	=	2.50 ksi
fy : Rebar Yield	=	60.0 ksi
Ec : Concrete Elastic Modulus	=	3,122.0 ksi
Concrete Density	=	145.0 pcf
φ Values Flexure	=	0.90
Shear	=	0.850

Analysis Settings

Min Steel % Bending Reinf.	=	
Min Allow % Temp Reinf.	=	0.00180
Min. Overturning Safety Factor	=	1.50 : 1
Min. Sliding Safety Factor	=	1.50 : 1
Add Ftg Wt for Soil Pressure	:	No
Use ftg wt for stability, moments & shears	:	No
Add Pedestal Wt for Soil Pressure	:	No
Use Pedestal wt for stability, mom & shear	:	No

Soil Design Values

Allowable Soil Bearing	=	2.50 ksf
Increase Bearing By Footing Weight	=	No
Soil Passive Resistance (for Sliding)	=	180.0 pcf
Soil/Concrete Friction Coeff.	=	0.450

Increases based on footing Depth

Footing base depth below soil surface	=	2.0 ft
Allow press. increase per foot of depth	=	0.0 ksf
when footing base is below	=	0.0 ft

Increases based on footing plan dimension

Allowable pressure increase per foot of depth	=	0.0 ksf
when max. length or width is greater than	=	0.0 ft

Dimensions

Width parallel to X-X Axis	=	6.50 ft
Length parallel to Z-Z Axis	=	6.50 ft
Footing Thickness	=	24.0 in

Pedestal dimensions...

px : parallel to X-X Axis	=	0.0 in
pz : parallel to Z-Z Axis	=	0.0 in
Height	=	0.0 in

Rebar Centerline to Edge of Concrete...

at Bottom of footing	=	3.0 in

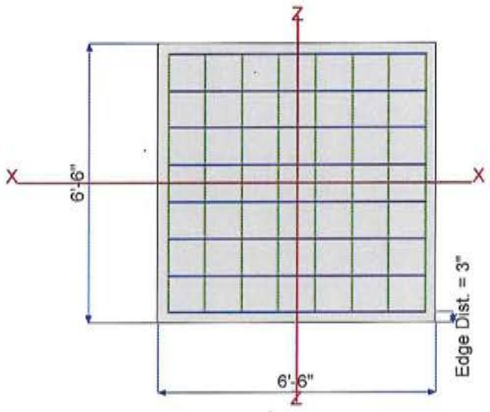

Reinforcing

Bars parallel to X-X Axis			
Number of Bars	=		8
Reinforcing Bar Size	=	#	6
Bars parallel to Z-Z Axis			
Number of Bars	=		8
Reinforcing Bar Size	=	#	6

Bandwidth Distribution Check (ACI 15.4.4.2)

Direction Requiring Closer Separation	n/a
# Bars required within zone	n/a
# Bars required on each side of zone	n/a

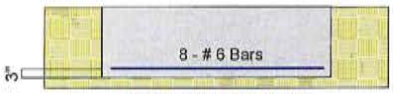

X-X Section Looking to +Z

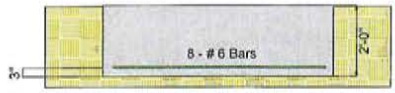

Z-Z Section Looking to +X

Applied Loads

		D	Lr	L	S	W	E	H	
P : Column Load	=	10.0	10.0	5.0	90.0	0.0	0.0	0.0	k
OB : Overburden	=	0.0	0.0	0.0	0.0	0.0	0.0	0.0	ksf
M-xx	=	0.0	0.0	0.0	0.0	0.0	0.0	0.0	k-ft
M-zz	=	0.0	0.0	0.0	0.0	0.0	0.0	0.0	k-ft
V-x	=	0.0	0.0	0.0	0.0	0.0	0.0	0.0	k
V-z	=	0.0	0.0	0.0	0.0	0.0	0.0	0.0	k

RICHMOND HOFFMAYER INC.
STRUCTURAL ENGINEERING

Project Title: VILLAGE NEST
Engineer: JJH
Project Descr: MULTI UNIT PROJECT

Project ID: 2017-0610

27

Printed: 11 JUL 2017, 3:49PM

General Footing

File = d:\ENERCALC Projects\2017-0610.ec6
ENERCALC, INC. 1983-2017, Build:10.17.6.29, Ver:10.17.6.29
Lic. # : KW-06002886 Licensee : RICHMOND HOFFMAYER

Description : MAX PAD: FELDSPAR UVN

NOT APPLICABLE

DESIGN SUMMARY

Design OK

	Min. Ratio	Item	Applied	Capacity	Governing Load Combination
PASS	0.9688	Soil Bearing	2.422 ksf	2.50 ksf	+D+S about Z-Z axis
PASS	n/a	Overturning - X-X	0.0 k-ft	0.0 k-ft	No Overturning
PASS	n/a	Overturning - Z-Z	0.0 k-ft	0.0 k-ft	No Overturning
PASS	n/a	Sliding - X-X	0.0 k	0.0 k	No Sliding
PASS	n/a	Sliding - Z-Z	0.0 k	0.0 k	No Sliding
PASS	n/a	Uplift	0.0 k	0.0 k	No Uplift
PASS	0.3993	Z Flexure (+X)	19.813 k-ft/ft	49.623 k-ft/ft	+1.20D+0.50L+1.60S
PASS	0.3993	Z Flexure (-X)	19.813 k-ft/ft	49.623 k-ft/ft	+1.20D+0.50L+1.60S
PASS	0.3993	X Flexure (+Z)	19.813 k-ft/ft	49.623 k-ft/ft	+1.20D+0.50L+1.60S
PASS	0.3993	X Flexure (-Z)	19.813 k-ft/ft	49.623 k-ft/ft	+1.20D+0.50L+1.60S
PASS	0.2656	1-way Shear (+X)	22.578 psi	85.0 psi	+1.20D+0.50L+1.60S
PASS	0.2656	1-way Shear (-X)	22.578 psi	85.0 psi	+1.20D+0.50L+1.60S
PASS	0.2656	1-way Shear (+Z)	22.578 psi	85.0 psi	+1.20D+0.50L+1.60S
PASS	0.2656	1-way Shear (-Z)	22.578 psi	85.0 psi	+1.20D+0.50L+1.60S
PASS	0.4910	2-way Punching	83.463 psi	170.0 psi	+1.20D+0.50L+1.60S

Detailed Results

Soil Bearing

Rotation Axis & Load Combination...	Gross Allowable	Xecc	Zecc	Actual Soil Bearing Stress @ Location (in) Bottom, -Z	Top, +Z	Left, -X	Right, +X	Actual / Allow Ratio
X-X, D Only	2.50	n/a	0.0	0.2917	0.2917	n/a	n/a	0.117
X-X, +D+L	2.50	n/a	0.0	0.410	0.410	n/a	n/a	0.164
X-X, +D+Lr	2.50	n/a	0.0	0.5284	0.5284	n/a	n/a	0.211
X-X, +D+S	2.50	n/a	0.0	2.422	2.422	n/a	n/a	0.969
X-X, +D+0.750Lr+0.750L	2.50	n/a	0.0	0.5580	0.5580	n/a	n/a	0.223
X-X, +D+0.750L+0.750S	2.50	n/a	0.0	1.978	1.978	n/a	n/a	0.791
X-X, +0.60D	2.50	n/a	0.0	0.1750	0.1750	n/a	n/a	0.070
Z-Z, D Only	2.50	0.0	n/a	n/a	n/a	0.2917	0.2917	0.117
Z-Z, +D+L	2.50	0.0	n/a	n/a	n/a	0.410	0.410	0.164
Z-Z, +D+Lr	2.50	0.0	n/a	n/a	n/a	0.5284	0.5284	0.211
Z-Z, +D+S	2.50	0.0	n/a	n/a	n/a	2.422	2.422	0.969
Z-Z, +D+0.750Lr+0.750L	2.50	0.0	n/a	n/a	n/a	0.5580	0.5580	0.223
Z-Z, +D+0.750L+0.750S	2.50	0.0	n/a	n/a	n/a	1.978	1.978	0.791
Z-Z, +0.60D	2.50	0.0	n/a	n/a	n/a	0.1750	0.1750	0.070

Footing Flexure

Flexure Axis & Load Combination	Mu k-ft	Side	Tension Surface	As Req'd in^2	Gvrn. As in^2	Actual As in^2	Phi*Mn k-ft	Status
X-X, +1.40D	1.750	+Z	Bottom	0.5184	Min Temp %	0.5415	49.623	OK
X-X, +1.40D	1.750	-Z	Bottom	0.5184	Min Temp %	0.5415	49.623	OK
X-X, +1.20D+0.50Lr+1.60L	3.125	+Z	Bottom	0.5184	Min Temp %	0.5415	49.623	OK
X-X, +1.20D+0.50Lr+1.60L	3.125	-Z	Bottom	0.5184	Min Temp %	0.5415	49.623	OK
X-X, +1.20D+1.60L+0.50S	8.125	+Z	Bottom	0.5184	Min Temp %	0.5415	49.623	OK
X-X, +1.20D+1.60L+0.50S	8.125	-Z	Bottom	0.5184	Min Temp %	0.5415	49.623	OK
X-X, +1.20D+1.60Lr+0.50L	3.813	+Z	Bottom	0.5184	Min Temp %	0.5415	49.623	OK
X-X, +1.20D+1.60Lr+0.50L	3.813	-Z	Bottom	0.5184	Min Temp %	0.5415	49.623	OK
X-X, +1.20D+1.60Lr	3.50	+Z	Bottom	0.5184	Min Temp %	0.5415	49.623	OK
X-X, +1.20D+1.60Lr	3.50	-Z	Bottom	0.5184	Min Temp %	0.5415	49.623	OK
X-X, +1.20D+0.50L+1.60S	19.813	+Z	Bottom	0.5184	Min Temp %	0.5415	49.623	OK
X-X, +1.20D+0.50L+1.60S	19.813	-Z	Bottom	0.5184	Min Temp %	0.5415	49.623	OK
X-X, +1.20D+1.60S	19.50	+Z	Bottom	0.5184	Min Temp %	0.5415	49.623	OK
X-X, +1.20D+1.60S	19.50	-Z	Bottom	0.5184	Min Temp %	0.5415	49.623	OK
X-X, +1.20D+0.50Lr+0.50L	2.438	+Z	Bottom	0.5184	Min Temp %	0.5415	49.623	OK
X-X, +1.20D+0.50Lr+0.50L	2.438	-Z	Bottom	0.5184	Min Temp %	0.5415	49.623	OK
X-X, +1.20D+0.50L+0.50S	7.438	+Z	Bottom	0.5184	Min Temp %	0.5415	49.623	OK
X-X, +1.20D+0.50L+0.50S	7.438	-Z	Bottom	0.5184	Min Temp %	0.5415	49.623	OK
X-X, +1.20D+0.50L+0.20S	4.063	+Z	Bottom	0.5184	Min Temp %	0.5415	49.623	OK
X-X, +1.20D+0.50L+0.20S	4.063	-Z	Bottom	0.5184	Min Temp %	0.5415	49.623	OK
X-X, +0.90D	1.125	+Z	Bottom	0.5184	Min Temp %	0.5415	49.623	OK
X-X, +0.90D	1.125	-Z	Bottom	0.5184	Min Temp %	0.5415	49.623	OK

RICHMOND HOFFMAYER INC.
STRUCTURAL ENGINEERING

Project Title: VILLAGE NEST
Engineer: JJH
Project Descr: MULTI UNIT PROJECT

Project ID: 2017-0610

27e

Printed: 11 JUL 2017, 3:49PM

General Footing

File = d:\ENERCALC Projects\2017-0610.ec6
ENERCALC, INC. 1983-2017, Build:10.17.6.29, Ver:10.17.6.29

Lic. # : KW-06002886 — Licensee : RICHMOND HOFFMAYER

Description : MAX PAD: FELDSPAR UVN

NOT APPLICABLE

Footing Flexure

Flexure Axis & Load Combination	Mu k-ft	Side	Tension Surface	As Req'd in^2	Gvrn. As in^2	Actual As in^2	Phi*Mn k-ft	Status
Z-Z, +1.40D	1.750	-X	Bottom	0.5184	Min Temp %	0.5415	49.623	OK
Z-Z, +1.40D	1.750	+X	Bottom	0.5184	Min Temp %	0.5415	49.623	OK
Z-Z, +1.20D+0.50Lr+1.60L	3.125	-X	Bottom	0.5184	Min Temp %	0.5415	49.623	OK
Z-Z, +1.20D+0.50Lr+1.60L	3.125	+X	Bottom	0.5184	Min Temp %	0.5415	49.623	OK
Z-Z, +1.20D+1.60L+0.50S	8.125	-X	Bottom	0.5184	Min Temp %	0.5415	49.623	OK
Z-Z, +1.20D+1.60L+0.50S	8.125	+X	Bottom	0.5184	Min Temp %	0.5415	49.623	OK
Z-Z, +1.20D+1.60Lr+0.50L	3.813	-X	Bottom	0.5184	Min Temp %	0.5415	49.623	OK
Z-Z, +1.20D+1.60Lr+0.50L	3.813	+X	Bottom	0.5184	Min Temp %	0.5415	49.623	OK
Z-Z, +1.20D+1.60Lr	3.50	-X	Bottom	0.5184	Min Temp %	0.5415	49.623	OK
Z-Z, +1.20D+1.60Lr	3.50	+X	Bottom	0.5184	Min Temp %	0.5415	49.623	OK
Z-Z, +1.20D+0.50L+1.60S	19.813	-X	Bottom	0.5184	Min Temp %	0.5415	49.623	OK
Z-Z, +1.20D+0.50L+1.60S	19.813	+X	Bottom	0.5184	Min Temp %	0.5415	49.623	OK
Z-Z, +1.20D+1.60S	19.50	-X	Bottom	0.5184	Min Temp %	0.5415	49.623	OK
Z-Z, +1.20D+1.60S	19.50	+X	Bottom	0.5184	Min Temp %	0.5415	49.623	OK
Z-Z, +1.20D+0.50Lr+0.50L	2.438	-X	Bottom	0.5184	Min Temp %	0.5415	49.623	OK
Z-Z, +1.20D+0.50Lr+0.50L	2.438	+X	Bottom	0.5184	Min Temp %	0.5415	49.623	OK
Z-Z, +1.20D+0.50L+0.50S	7.438	-X	Bottom	0.5184	Min Temp %	0.5415	49.623	OK
Z-Z, +1.20D+0.50L+0.50S	7.438	+X	Bottom	0.5184	Min Temp %	0.5415	49.623	OK
Z-Z, +1.20D+0.50L+0.20S	4.063	-X	Bottom	0.5184	Min Temp %	0.5415	49.623	OK
Z-Z, +1.20D+0.50L+0.20S	4.063	+X	Bottom	0.5184	Min Temp %	0.5415	49.623	OK
Z-Z, +0.90D	1.125	-X	Bottom	0.5184	Min Temp %	0.5415	49.623	OK
Z-Z, +0.90D	1.125	+X	Bottom	0.5184	Min Temp %	0.5415	49.623	OK

One Way Shear

Load Combination...	Vu @ -X	Vu @ +X	Vu @ -Z	Vu @ +Z	Vu:Max	Phi Vn	Vu / Phi*Vn	Status
+1.40D	1.99 psi	1.99 psi	1.99 psi	1.99 psi	1.99 psi	85.00 psi	0.02	0.00
+1.20D+0.50Lr+1.60L	3.56 psi	3.56 psi	3.56 psi	3.56 psi	3.56 psi	85.00 psi	0.04	0.00
+1.20D+1.60L+0.50S	9.26 psi	9.26 psi	9.26 psi	9.26 psi	9.26 psi	85.00 psi	0.11	0.00
+1.20D+1.60Lr+0.50L	4.35 psi	4.35 psi	4.35 psi	4.35 psi	4.35 psi	85.00 psi	0.05	0.00
+1.20D+1.60Lr	3.99 psi	3.99 psi	3.99 psi	3.99 psi	3.99 psi	85.00 psi	0.05	0.00
+1.20D+0.50L+1.60S	22.58 psi	22.58 psi	22.58 psi	22.58 psi	22.58 psi	85.00 psi	0.27	0.00
+1.20D+1.60S	22.22 psi	22.22 psi	22.22 psi	22.22 psi	22.22 psi	85.00 psi	0.26	0.00
+1.20D+0.50Lr+0.50L	2.78 psi	2.78 psi	2.78 psi	2.78 psi	2.78 psi	85.00 psi	0.03	0.00
+1.20D+0.50L+0.50S	8.48 psi	8.48 psi	8.48 psi	8.48 psi	8.48 psi	85.00 psi	0.10	0.00
+1.20D+0.50L+0.20S	4.63 psi	4.63 psi	4.63 psi	4.63 psi	4.63 psi	85.00 psi	0.05	0.00
+0.90D	1.28 psi	1.28 psi	1.28 psi	1.28 psi	1.28 psi	85.00 psi	0.02	0.00

Two-Way "Punching" Shear

All units k

Load Combination...	Vu	Phi*Vn	Vu / Phi*Vn	Status
+1.40D	7.37 psi	170.00 psi	0.04337	OK
+1.20D+0.50Lr+1.60L	13.17 psi	170.00 psi	0.07744	OK
+1.20D+1.60L+0.50S	34.23 psi	170.00 psi	0.2013	OK
+1.20D+1.60Lr+0.50L	16.06 psi	170.00 psi	0.09448	OK
+1.20D+1.60Lr	14.74 psi	170.00 psi	0.08673	OK
+1.20D+0.50L+1.60S	83.46 psi	170.00 psi	0.491	OK
+1.20D+1.60S	82.15 psi	170.00 psi	0.4832	OK
+1.20D+0.50Lr+0.50L	10.27 psi	170.00 psi	0.0604	OK
+1.20D+0.50L+0.50S	31.33 psi	170.00 psi	0.1843	OK
+1.20D+0.50L+0.20S	17.11 psi	170.00 psi	0.1007	OK
+0.90D	4.74 psi	170.00 psi	0.02788	OK

RICHMOND HOFFMAYER INC.
STRUCTURAL ENGINEERING

Project Title: VILLAGE NEST
Engineer: JJH
Project Descr: MULTI UNIT PROJECT

Project ID: 2017-0610

279

Printed: 21 JUL 2017, 10:01AM

Concrete Beam

File = D:\ENERCALC Projects\2017-0610.ec6
ENERCALC, INC. 1983-2017, Build:10.17.6.29, Ver:10.17.6.29
Lic. # : KW-06002886 Licensee : RICHMOND HOFFMAYER

Description : FELDSPAR UVN LOWER FLOOR - B22 - CONCRETE

REPLACE STEEL W/ CONC BEAM

CODE REFERENCES

Calculations per ACI 318-14, IBC 2015, ASCE 7-10
Load Combination Set : ASCE 7-10

NOT APPLICABLE

Material Properties

f'c	=	2.50 ksi	ϕ Phi Values	Flexure :	0.90
fr = f'c^1/2 * 7.50	=	375.0 psi		Shear :	0.750
ψ Density	=	145.0 pcf	β_1	=	0.850
λ LtWt Factor	=	1.0			
Elastic Modulus	=	3,122.0 ksi	Fy - Stirrups		40.0 ksi
fy - Main Rebar	=	60.0 ksi	E - Stirrups	=	29,000.0 ksi
E - Main Rebar	=	29,000.0 ksi	Stirrup Bar Size #		3
			Number of Resisting Legs Per Stirrup =		2

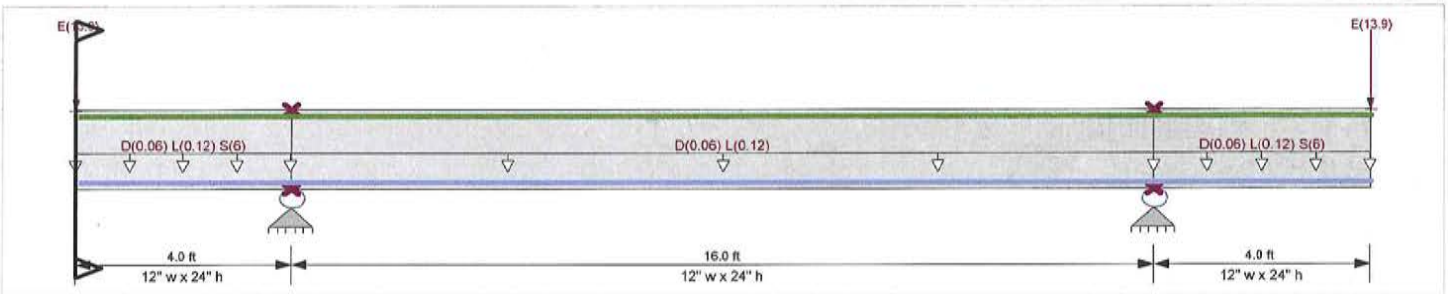

Cross Section & Reinforcing Details

Rectangular Section, Width = 12.0 in, Height = 24.0 in

Span #1 Reinforcing....
4-#6 at 2.0 in from Bottom, from 0.0 to 4.0 ft in this span
4-#6 at 2.0 in from Top, from 0.0 to 4.0 ft in this span

Span #2 Reinforcing....
4-#6 at 2.0 in from Bottom, from 0.0 to 16.0 ft in this span
4-#6 at 2.0 in from Top, from 0.0 to 16.0 ft in this span

Span #3 Reinforcing....
4-#6 at 2.0 in from Bottom, from 0.0 to 4.0 ft in this span
4-#6 at 2.0 in from Top, from 0.0 to 4.0 ft in this span

Applied Loads

Service loads entered. Load Factors will be applied for calculations.

Beam self weight calculated and added to loads
Load for Span Number 1
Uniform Load : D = 0.020, L = 0.040, S = 2.0 ksf, Tributary Width = 3.0 ft, (FLOOR)
Point Load : E = 13.90 k @ 0.0 ft, (HOLD DOWN OVERSTRENGTH)
Load for Span Number 2
Uniform Load : D = 0.020, L = 0.040 ksf, Tributary Width = 3.0 ft, (FLOOR)
Load for Span Number 3
Uniform Load : D = 0.020, L = 0.040, S = 2.0 ksf, Tributary Width = 3.0 ft, (FLOOR)
Point Load : E = 13.90 k @ 4.0 ft, (HOLD DOWN OVERSTRENGTH)

DESIGN SUMMARY

Design OK

Maximum Bending Stress Ratio =	0.498 : 1	Maximum Deflection				
Section used for this span	Typical Section	Max Downward Transient Deflection	0.163 in	Ratio =	590	>=36
Mu : Applied	-80.640 k-ft	Max Upward Transient Deflection	-0.145 in	Ratio =	1325	>=36
Mn * Phi : Allowable	162.057 k-ft	Max Downward Total Deflection	0.184 in	Ratio =	520	>=18
Location of maximum on span	0.000 ft	Max Upward Total Deflection	-0.152 in	Ratio =	1267	>=18
Span # where maximum occurs	Span # 2					

Vertical Reactions

Support notation : Far left is #1

Load Combination	Support 1	Support 2	Support 3	Support 4
Overall MAXimum		30.578	30.577	
Overall MINimum		1.440	1.440	
D Only		4.200	4.200	

Concrete Beam

Description : FELDSPAR UVN LOWER FLOOR - B22 - CONCRETE

NOT APPLICABLE

Vertical Reactions

Support notation : Far left is #1

Load Combination	Support 1	Support 2	Support 3	Support 4
+D+L		5.640	5.640	
+D+S		28.200	28.200	
+D+0.750L		5.280	5.280	
+D+0.750L+0.750S		23.280	23.280	
+D+0.70E		13.930	13.930	
+D+0.750L+0.750S+0.5250E		30.578	30.577	
+0.60D		2.520	2.520	
+0.60D+0.70E		12.250	12.250	
L Only		1.440	1.440	
S Only		24.000	24.000	
E Only		13.900	13.900	

Shear Stirrup Requirements

Between 0.00 to 0.00 ft, Vu < PhiVc/2, Req'd Vs = Not Reqd 9.6.3.1, use stirrups spaced at 0.000 in
Between 0.03 to 2.19 ft, PhiVc/2 < Vu <= PhiVc, Req'd Vs = Min 9.6.3.3, use stirrups spaced at 11.000 in
Between 2.21 to 3.97 ft, PhiVc < Vu, Req'd Vs = 18.196, use stirrups spaced at 7.000 in
Between 4.00 to 19.89 ft, Vu < PhiVc/2, Req'd Vs = Not Reqd 9.6.3.1, use stirrups spaced at 0.000 in
Between 20.00 to 21.79 ft, PhiVc < Vu, Req'd Vs = 0.2004, use stirrups spaced at 7.000 in
Between 21.81 to 23.97 ft, PhiVc/2 < Vu <= PhiVc, Req'd Vs = Min 9.6.3.3, use stirrups spaced at 11.000 in

Overall Maximum Deflections

Load Combination	Span	Max. "-" Defl	Location in Span	Load Combination	Max. "+" Defl	Location in Span
+D+0.750L+0.750S+0.5250E	1	0.1841	0.000	+D+0.750L+0.750S+0.5250E	-0.0124	4.320
+D+0.750L+0.750S+0.5250E	2	0.0033	16.080	+D+0.750L+0.750S+0.5250E	-0.1515	8.000
+D+0.750L+0.750S+0.5250E	3	0.1841	4.000		0.0000	8.000

RICHMOND HOFFMAYER INC.
STRUCTURAL ENGINEERING

Project Title: VILLAGE NEST
Engineer: JJH
Project Descr: MULTI UNIT PROJECT

Project ID: 2017-0610
201

Printed: 21 JUL 2017, 9:59AM

Steel Base Plate

File = D:\ENERCALC Projects\2017-0610.ec6
ENERCALC, INC. 1983-2017, Build:10.17.6.29, Ver:10.17.6.29
Lic. # : KW-06002886 Licensee : RICHMOND HOFFMAYER

Description : P.C. BASE PLATE

NARROW BASE PLATES

Code References

Calculations per AISC Design Guide # 1, IBC 2015, CBC 2016, ASCE 7-10
Load Combination Set : ASCE 7-10

General Information

Material Properties

AISC Design Method	Load Resistance Factor Design		Φ c : LRFD Resistance Factor	0.60
Steel Plate Fy	=	36.0 ksi		
Concrete Support f'c	=	2.50 ksi		
Assumed Bearing Area :	Bearing Area = P / Fp		Allowable Bearing Fp per J8	4.017 ksi

Column & Plate

Column Properties

Steel Section : Pipe4STD

Depth	4.5 in	Area	2.96 in^2
Width	4.5 in	Ixx	in^4
Flange Thickness	0.221 in	Iyy	in^4
Web Thickness	in		

Plate Dimensions

N : Length	8.0 in
B : Width	10.50 in
Thickness	0.750 in

Column assumed welded to base plate.

Support Dimensions

Width along "X"	8.250 in
Length along "Z"	24.0 in

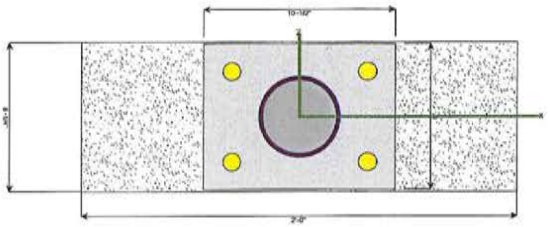

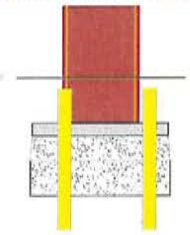

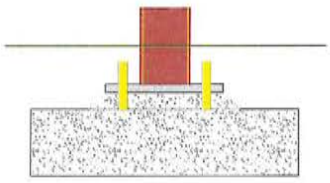

Applied Loads

	P-Y	V-Z	M-X
D : Dead Load	3.807 k	k	k-ft
L : Live	k	k	k-ft
Lr : Roof Live	4.015 k	k	k-ft
S : Snow	49.381 k	k	k-ft
W : Wind	k	k	k-ft
E : Earthquake	k	k	k-ft
H : Lateral Earth	k	k	k-ft

" P " = Gravity load, "+" sign is downward.
"+" Moments create higher soil pressure at +Z edge.
"+" Shears push plate towards +Z edge.

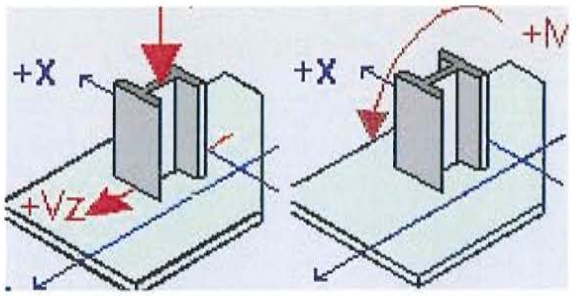

GOVERNING DESIGN LOAD CASE SUMMARY

Plate Design Summary

Design Method	Load Resistance Factor Design
Governing Load Combination	+1.20D+1.60S
Governing Load Case Type	Axial Load Only
Design Plate Size	**8" x 10 -1/2" x 0 -3/4"**
Pu : Axial	83.578 k
Mu : Moment	0.000 k-ft

Mu : Max. Moment	0.173 k-in
fb : Max. Bending Stress	1.228 ksi
Fb : Allowable : Fy * Phi	32.400 ksi
Bending Stress Ratio	0.038
	Bending Stress OK
fu : Max. Plate Bearing Stress	1.706 ksi
Fp : Allowable : min(0.85*f'c*sqrt(A2/A1), 1.7* f'c)*Phi	1.722 ksi
Bearing Stress Ratio	0.991
	Bearing Stress OK

RICHMOND HOFFMAYER INC.
STRUCTURAL ENGINEERING

Project Title: VILLAGE NEST
Engineer: JJH
Project Descr: MULTI UNIT PROJECT

Project ID: 2017-0610
2 of 2

Printed: 21 JUL 2017, 9:59AM

Steel Base Plate

File = D:\ENERCALC Projects\2017-0610.ec6
ENERCALC, INC. 1983-2017, Build:10.17.6.29, Ver:10.17.6.29
Lic. # : KW-06002886 Licensee : RICHMOND HOFFMAYER

Description : HSS BASE PLATE ON STEM

Code References

Calculations per AISC Design Guide # 1, IBC 2015, CBC 2016, ASCE 7-10
Load Combination Set : ASCE 7-10

General Information

Material Properties

AISC Design Method	Load Resistance Factor Design		Φ c : LRFD Resistance Factor	0.60
Steel Plate Fy	=	36.0 ksi		
Concrete Support f'c	=	2.50 ksi		
Assumed Bearing Area :	Bearing Area = P / Fp		Allowable Bearing Fp per J8	3.814 ksi

Column & Plate

Column Properties

Steel Section : HSS6x6x3/8

Depth	6 in	Area	7.58 in^2
Width	6 in	Ixx	in^4
Flange Thickness	0.349 in	Iyy	in^4
Web Thickness	in		

Plate Dimensions

N : Length	8.0 in
B : Width	16.0 in
Thickness	0.8750 in

Column assumed welded to base plate.

Support Dimensions

Width along "X"	8.250 in
Length along "Z"	24.0 in

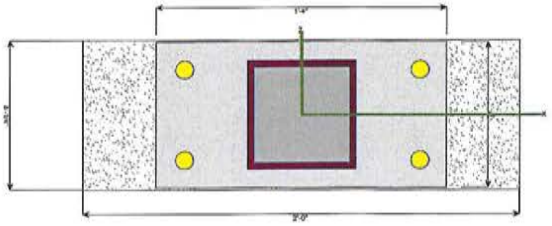

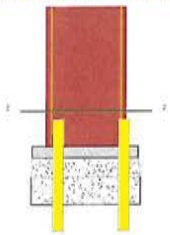

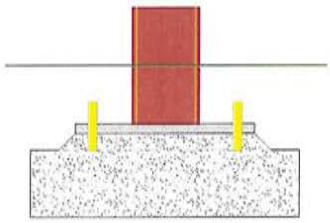

Applied Loads

	P-Y	V-Z	M-X
D : Dead Load	9.050 k	k	k-ft
L : Live	7.440 k	k	k-ft
Lr : Roof Live	4.028 k	k	k-ft
S : Snow	90.670 k	k	k-ft
W : Wind	k	k	k-ft
E : Earthquake	k	k	k-ft
H : Lateral Earth	k	k	k-ft

" P " = Gravity load, "+" sign is downward.
"+" Moments create higher soil pressure at +Z edge.
"+" Shears push plate towards +Z edge.

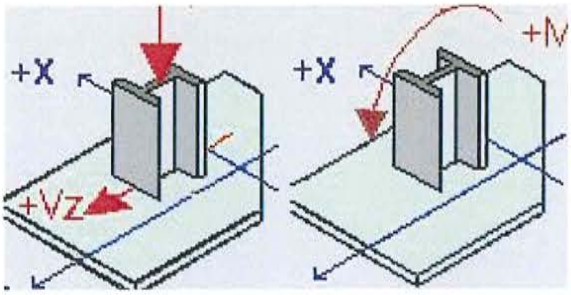

GOVERNING DESIGN LOAD CASE SUMMARY

Plate Design Summary

Design Method	Load Resistance Factor Design
Governing Load Combination	+1.20D+0.50L+1.60S
Governing Load Case Type	Axial Load Only
Design Plate Size	**8" x 1'-4" x 0 -7/8"**
Pu : Axial	159.652 k
Mu : Moment	0.000 k-ft

Mu : Max. Moment	3.033 k-in
fb : Max. Bending Stress	15.846 ksi
Fb : Allowable :	32.400 ksi
Fy * Phi	
Bending Stress Ratio	0.489
Bending Stress OK	
fu : Max. Plate Bearing Stress	1.385 ksi
Fp : Allowable :	1.386 ksi
min(0.85*f'c*sqrt(A2/A1), 1.7* f'c)*Phi	
Bearing Stress Ratio	1.000
Bearing Stress OK	

RICHMOND HOFFMAYER INC.
STRUCTURAL ENGINEERING

Project Title: VILLAGE NEST
Engineer: JJH
Project Descr: MULTI UNIT PROJECT

Project ID: 2017-0610

203

Printed: 21 JUL 2017, 9:59AM

Concrete Column

File = D:\ENERCALC Projects\2017-0610.ec6
ENERCALC, INC. 1983-2017, Build:10.17.6.29, Ver:10.17.6.29
Lic. # : KW-06002886 Licensee : RICHMOND HOFFMAYER

Description : HSS SUPPORT - INTEGRAL w/ WALL

Code References

Calculations per ACI 318-14, IBC 2015, CBC 2016, ASCE 7-10
Load Combinations Used : ASCE 7-10

General Information

f'c : Concrete 28 day strength	=	2.50 ksi
E =	=	3,122.0 ksi
Density	=	150.0 pcf
β	=	0.850
fy - Main Rebar	=	60.0 ksi
E - Main Rebar	=	29,000.0 ksi
Allow. Reinforcing Limits		ASTM A615 Bars Used
Min. Reinf.	=	1.0 %
Max. Reinf.	=	8.0 %

Overall Column Height = 6.0 ft
End Fixity: Top & Bottom Pinned

Brace condition for deflection (buckling) along columns :
X-X (width) axis :
Unbraced Length for X-X Axis buckling = 6.0 ft, K = 1.0
Y-Y (depth) axis :
Unbraced Length for X-X Axis buckling = 6.0 ft, K = 1.0

Column Cross Section

Column Dimensions : 8.250in high x 24.0in Wide, Column Edge to Rebar Edge Cover = 2.0in

Column Reinforcing : 4 - #5 bars @ corners,, 1.0 - #5 bars top & bottom between corner bars

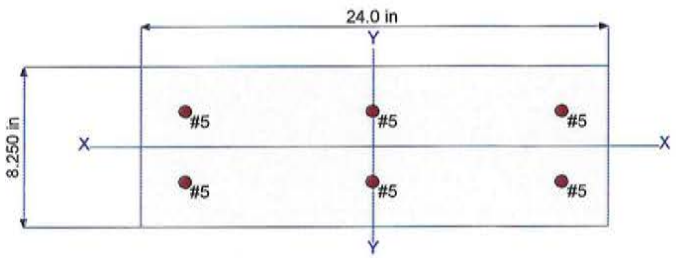

Applied Loads

Entered loads are factored per load combinations specified by user.

Column self weight included : 1,237.50 lbs * Dead Load Factor
AXIAL LOADS . . .
MAX: Axial Load at 6.0 ft above base, D = 10.0, LR = 10.0, L = 5.0, S = 90.0 k

DESIGN SUMMARY

Load Combination +1.20D+0.50L+1.60S
Location of max.above base 5.960 ft

Maximum Stress Ratio 0.582 : 1
Ratio = (Pu^2+Mu^2)^.5 / (PhiPn^2+PhiMn^2)^.5

Pu =	159.985 k	φ * Pn =	274.767 k
Mu-x =	0.0 k-ft	φ * Mn-x =	0.0 k-ft
Mu-y =	0.0 k-ft	φ * Mn-y =	0.0 k-ft
Mu Angle =	0.0 deg		
Mu at Angle =	0.0 k-ft	φMn at Angle =	0.0 k-ft

Pn & Mn values located at Pu-Mu vector intersection with capacity curve

Column Capacities . . .

Pnmax : Nominal Max. Compressive Axial Capacity	528.40 k
Pnmin : Nominal Min. Tension Axial Capacity	-111.60 k
φ Pn, max : Usable Compressive Axial Capacity	274.767 k
φ Pn, min : Usable Tension Axial Capacity	-72.540 k

Maximum SERVICE Load Reactions . .

Top along Y-Y	0.0 k	Bottom along Y-Y	0.0 k
Top along X-X	0.0 k	Bottom along X-X	0.0 k

Maximum SERVICE Load Deflections . . .

Along Y-Y 0.0 in at 0.0 ft above base
for load combination :
Along X-X 0.0 in at 0.0 ft above base
for load combination :

General Section Information . φ = 0.650 β = 0.850 θ = 0.80

ρ : % Reinforcing	0.9394 % Rebar < Min of 1.0 %
Reinforcing Area	1.860 in^2
Concrete Area	198.0 in^2

Governing Load Combination Results

Governing Factored Load Combination	Moment X-X	Moment Y-Y	Dist. from base ft	Axial Load k Pu	φ * Pn	δx	δx * Mux	δy	δy * Muy	Bending Analysis k-ft Alpha (deg)	δ Mu	φ Mn	Utilization Ratio
+1.40D			5.96	15.73	274.77					0.000			0.057
+1.20D+0.50Lr+1.60L			5.96	26.49	274.77					0.000			0.096
+1.20D+1.60L+0.50S			5.96	66.49	274.77					0.000			0.242

RICHMOND HOFFMAYER INC.
STRUCTURAL ENGINEERING

Project Title: VILLAGE NEST
Engineer: JJH
Project Descr: MULTI UNIT PROJECT

Project ID: 2017-0610

2e4

Printed: 21 JUL 2017, 9:59AM

Concrete Column

File = D:\ENERCALC Projects\2017-0610.ec6
ENERCALC, INC. 1983-2017, Build:10.17.6.29, Ver:10.17.6.29

Lic. # : KW-06002886 — Licensee : RICHMOND HOFFMAYER

Description : HSS SUPPORT - INTEGRAL w/ WALL

Governing Load Combination Results

Governing Factored Load Combination	Moment X-X	Moment Y-Y	Dist. from base ft	Axial Load k Pu	φ * Pn	Bending Analysis k-ft δx	δx * Mux	δy	δy * Muy	Alpha (deg)	δ Mu	φ Mn	Utilization Ratio
+1.20D+1.60Lr+0.50L			5.96	31.99	274.77					0.000			0.116
+1.20D+1.60Lr			5.96	29.49	274.77					0.000			0.107
+1.20D+0.50L+1.60S			5.96	159.99	274.77					0.000			0.582
+1.20D+1.60S			5.96	157.49	274.77					0.000			0.573
+1.20D+0.50Lr+0.50L			5.96	20.99	274.77					0.000			0.076
+1.20D+0.50L+0.50S			5.96	60.99	274.77					0.000			0.222
+1.20D+0.50L+0.20S			5.96	33.99	274.77					0.000			0.124
+0.90D			5.96	10.11	274.77					0.000			0.037

Maximum Reactions

Note: Only non-zero reactions are listed.

Load Combination	X-X Axis Reaction @ Base	@ Top	k	Y-Y Axis Reaction @ Base	@ Top	Axial Reaction @ Base	My - End Moments k-ft @ Base	@ Top	Mx - End Moments @ Base	@ Top
D Only						11.238				
+D+L						16.238				
+D+Lr						21.238				
+D+S						101.238				
+D+0.750Lr+0.750L						22.488				
+D+0.750L+0.750S						82.488				
+0.60D						6.743				
Lr Only						10.000				
L Only						5.000				
S Only						90.000				

Maximum Moment Reactions

Note: Only non-zero reactions are listed.

Load Combination	Moment About X-X Axis @ Base	@ Top	Moment About Y-Y Axis @ Base	@ Top
D Only	k-ft		k-ft	
+D+L	k-ft		k-ft	
+D+Lr	k-ft		k-ft	
+D+S	k-ft		k-ft	
+D+0.750Lr+0.750L	k-ft		k-ft	
+D+0.750L+0.750S	k-ft		k-ft	
+0.60D	k-ft		k-ft	
Lr Only	k-ft		k-ft	
L Only	k-ft		k-ft	
S Only	k-ft		k-ft	

Maximum Deflections for Load Combinations

Load Combination	Max. X-X Deflection		Distance		Max. Y-Y Deflection		Distance	
D Only	0.0000	in	0.000	ft	0.000	in	0.000	ft
+D+L	0.0000	in	0.000	ft	0.000	in	0.000	ft
+D+Lr	0.0000	in	0.000	ft	0.000	in	0.000	ft
+D+S	0.0000	in	0.000	ft	0.000	in	0.000	ft
+D+0.750Lr+0.750L	0.0000	in	0.000	ft	0.000	in	0.000	ft
+D+0.750L+0.750S	0.0000	in	0.000	ft	0.000	in	0.000	ft
+0.60D	0.0000	in	0.000	ft	0.000	in	0.000	ft
Lr Only	0.0000	in	0.000	ft	0.000	in	0.000	ft
L Only	0.0000	in	0.000	ft	0.000	in	0.000	ft
S Only	0.0000	in	0.000	ft	0.000	in	0.000	ft

RICHMOND HOFFMAYER INC.
STRUCTURAL ENGINEERING

Project Title: VILLAGE NEST
Engineer: JJH
Project Descr: MULTI UNIT PROJECT

Project ID: 2017-0610

285

Printed: 21 JUL 2017, 9:59AM

Concrete Column

File = D:\ENERCALC Projects\2017-0610.ec6
ENERCALC, INC. 1983-2017, Build:10.17.6.29, Ver:10.17.6.29

Lic. # : KW-06002886
Licensee : RICHMOND HOFFMAYER

Description : HSS SUPPORT - INTEGRAL w/ WALL

Sketches

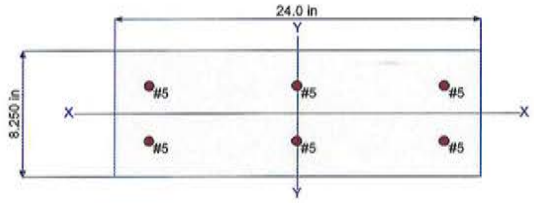

Looking along X-X Axis

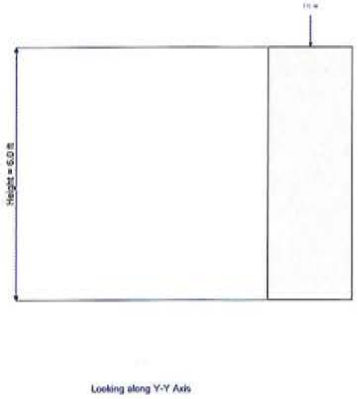

Looking along Y-Y Axis

Interaction Diagrams

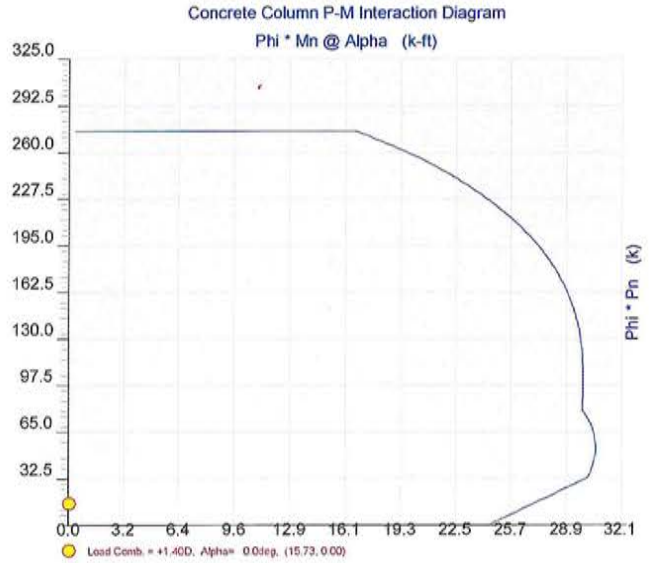

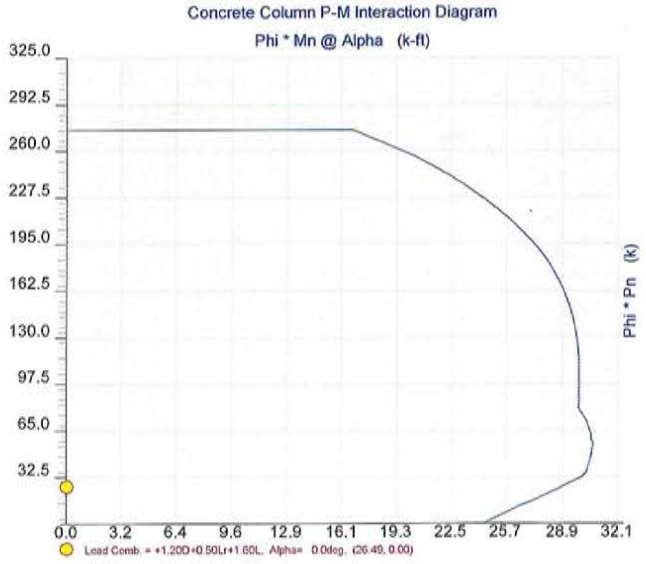

RICHMOND HOFFMAYER INC.
STRUCTURAL ENGINEERING

Project Title: VILLAGE NEST
Engineer: JJH
Project Descr: MULTI UNIT PROJECT

Project ID: 2017-0610
206

Printed: 21 JUL 2017, 9:59AM

Concrete Column

File = D:\ENERCALC Projects\2017-0610.ec6
ENERCALC, INC. 1983-2017, Build:10.17.6.29, Ver:10.17.6.29

Lic. # : KW-06002886
Licensee : RICHMOND HOFFMAYER

Description : HSS SUPPORT - INTEGRAL w/ WALL

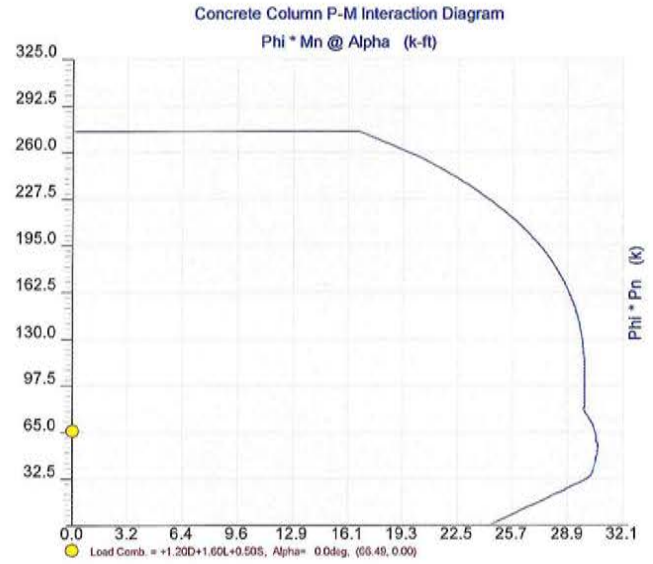

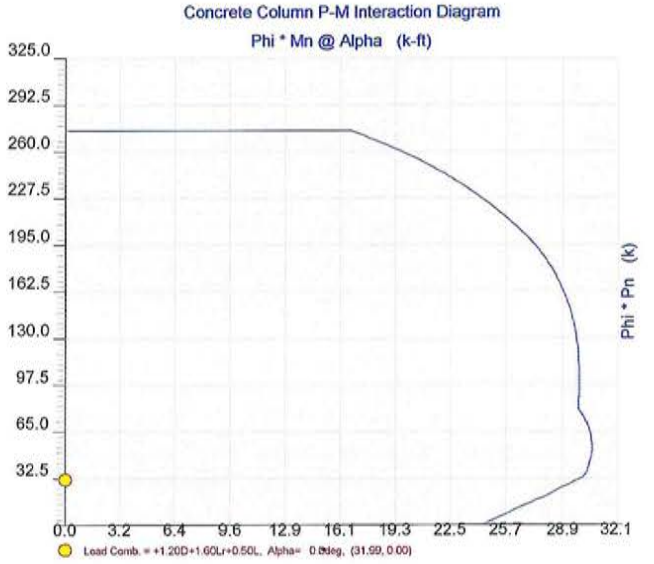

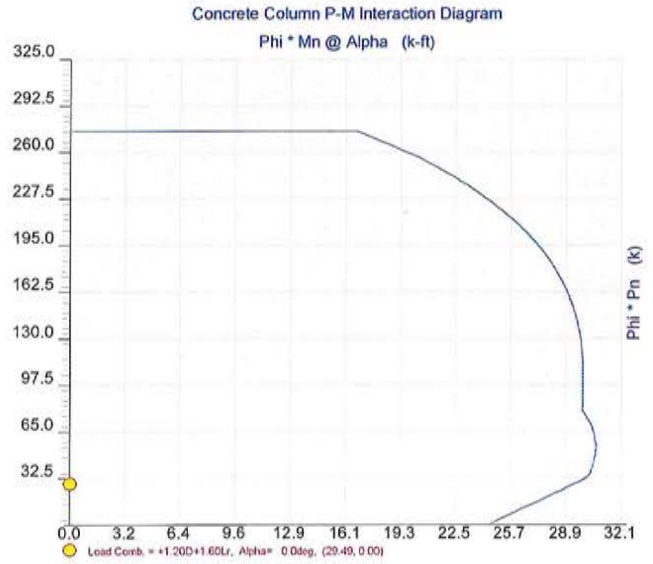

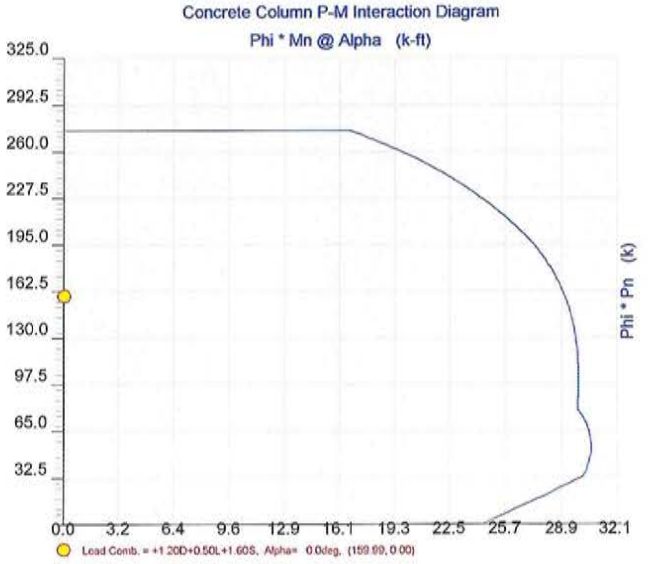

RICHMOND HOFFMAYER INC.
STRUCTURAL ENGINEERING

Project Title: VILLAGE NEST
Engineer: JJH
Project Descr: MULTI UNIT PROJECT

Project ID: 2017-0610

Printed: 21 JUL 2017, 9:59AM

Concrete Column

File = D:\ENERCALC Projects\2017-0610.ec6
ENERCALC, INC. 1983-2017, Build:10.17.6.29, Ver:10.17.6.29

Lic. # : KW-06002886
Licensee : RICHMOND HOFFMAYER

Description : HSS SUPPORT - INTEGRAL w/ WALL

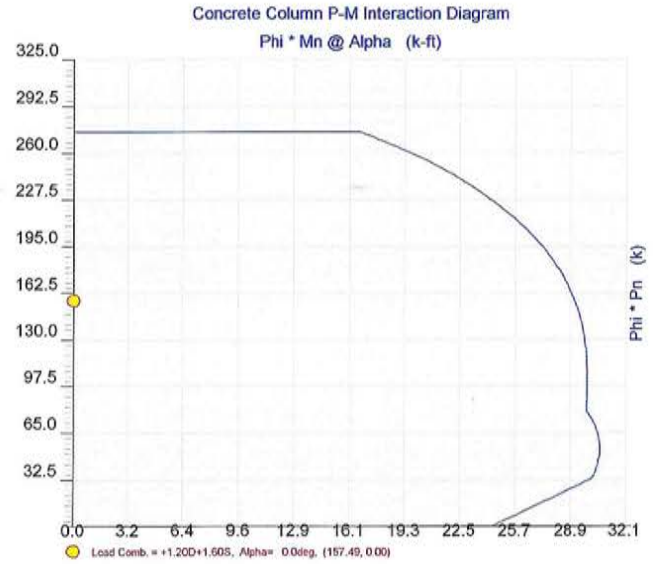

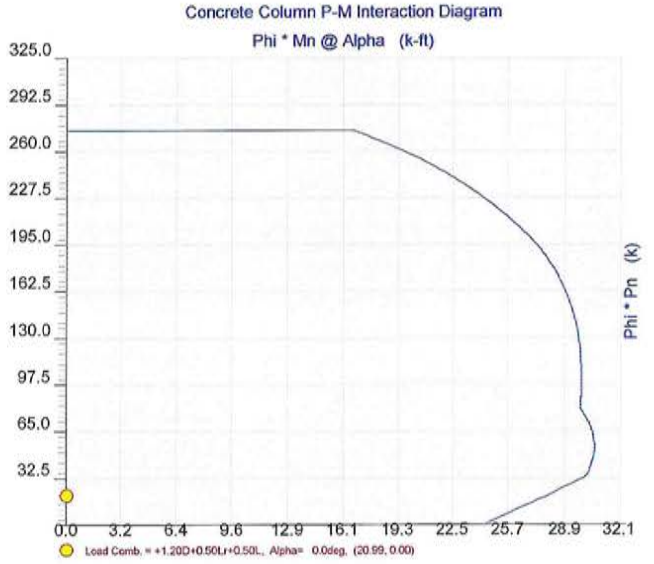

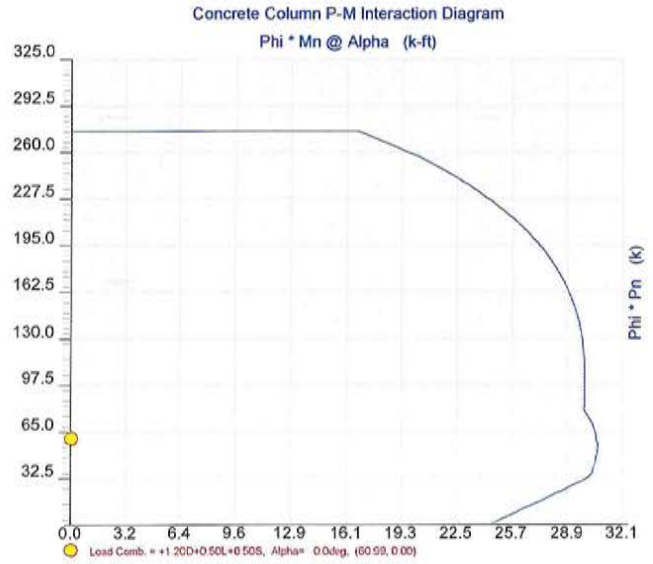

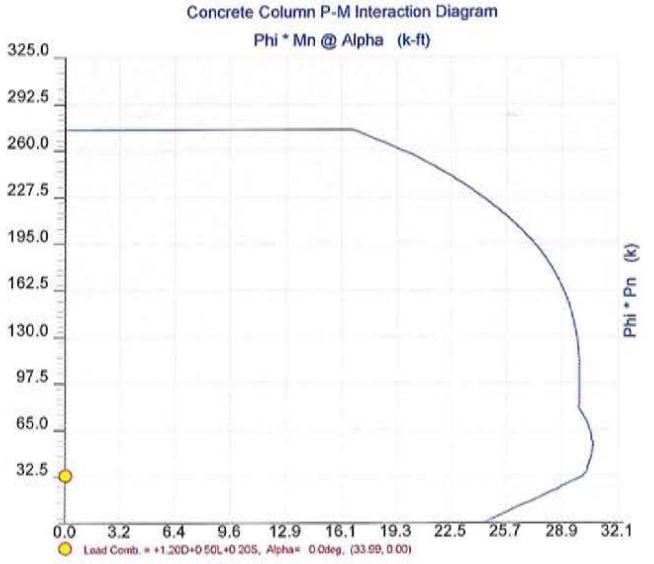

RICHMOND HOFFMAYER INC.
STRUCTURAL ENGINEERING

Project Title: VILLAGE NEST
Engineer: JJH
Project Descr: MULTI UNIT PROJECT

Project ID: 2017-0610

287 END

Printed: 21 JUL 2017, 9:59AM

Concrete Column

File = D:\ENERCALC Projects\2017-0610.ec6
ENERCALC, INC. 1983-2017, Build:10.17.6.29, Ver:10.17.6.29
Lic. # : KW-06002886 Licensee : RICHMOND HOFFMAYER

Description : HSS SUPPORT - INTEGRAL w/ WALL

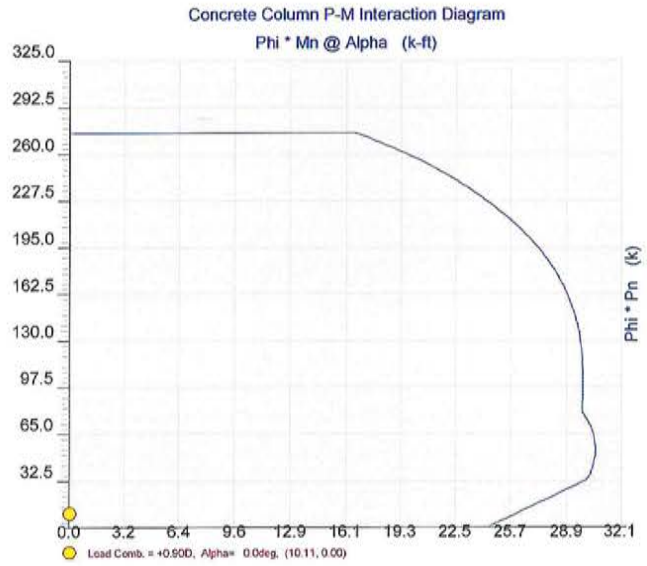

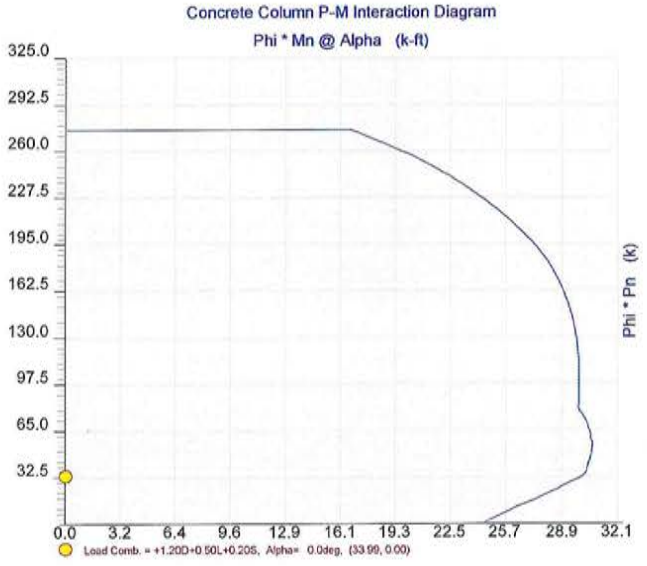

RICHMOND HOFFMAYER INC.
STRUCTURAL ENGINEERING

Project Title: VILLAGE NEST
Engineer: JJH
Project Descr: MULTI UNIT PROJECT

Project ID: 2017-0610

42A

Printed: 25 AUG 2017, 1:50PM

Wood Beam

File = D:\ENERCALC Projects\2017-0610.ec6
ENERCALC, INC. 1983-2017, Build:10.17.7.24, Ver:10.17.7.24
Lic. # : KW-06002886 Licensee : RICHMOND HOFFMAYER

Description : B15 - HEADER UNDER B3

CODE REFERENCES

Calculations per NDS 2015, IBC 2015, CBC 2016, ASCE 7-10
Load Combination Set : ASCE 7-10

Material Properties

Analysis Method : Allowable Stress Design
Load Combination : ASCE 7-10

Wood Species : Trus Joist
Wood Grade : MicroLam LVL 1.9 E

Beam Bracing : Completely Unbraced

Fb +	2,600.0 psi
Fb -	2,600.0 psi
Fc - Prll	2,510.0 psi
Fc - Perp	750.0 psi
Fv	285.0 psi
Ft	1,555.0 psi

E : Modulus of Elasticity

Ebend- xx	1,900.0 ksi
Eminbend - xx	965.71 ksi
Density	42.0 pcf

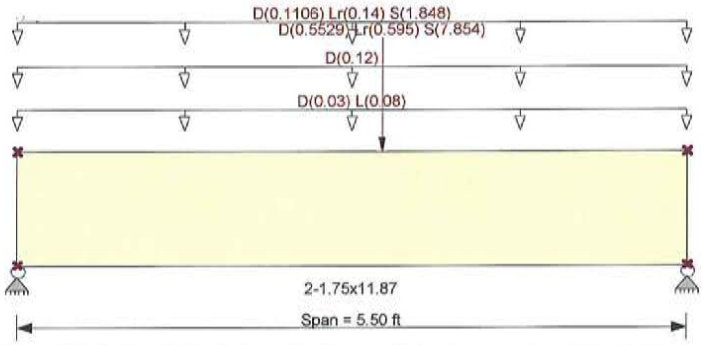

Applied Loads

Service loads entered. Load Factors will be applied for calculations.

Beam self weight calculated and added to loads
Uniform Load : D = 0.0150, L = 0.040 ksf, Tributary Width = 2.0 ft, (FLOOR)
Uniform Load : D = 0.120 , Tributary Width = 1.0 ft, (EXTERIOR WALL)
Uniform Load : D = 0.01580, Lr = 0.020, S = 0.2640 ksf, Tributary Width = 7.0 ft, (ROOF)
Point Load : D = 0.5529, Lr = 0.5950, S = 7.854 k @ 3.0 ft, (B3)

DESIGN SUMMARY

Design OK

Maximum Bending Stress Ratio	=	0.969 : 1	Maximum Shear Stress Ratio	=	0.917 : 1
Section used for this span		2-1.75x11.87	Section used for this span		2-1.75x11.87
fb : Actual	=	2,828.12 psi	fv : Actual	=	300.69 psi
FB : Allowable	=	2,917.56 psi	Fv : Allowable	=	327.75 psi
Load Combination		+D+S	Load Combination		+D+S
Location of maximum on span	=	2.991 ft	Location of maximum on span	=	4.516 ft
Span # where maximum occurs	=	Span # 1	Span # where maximum occurs	=	Span # 1

Maximum Deflection

Max Downward Transient Deflection	0.092 in	Ratio =	720 >=360
Max Upward Transient Deflection	0.000 in	Ratio =	0 <360
Max Downward Total Deflection	0.101 in	Ratio =	651 >=240.
Max Upward Total Deflection	0.000 in	Ratio =	0 <240.0

Vertical Reactions

Support notation : Far left is #1 Values in KIPS

Load Combination	Support 1	Support 2
Overall MAXimum	9.653	10.418
Overall MINimum	0.220	0.220
D Only	1.001	1.052
+D+L	1.221	1.272
+D+Lr	1.657	1.761
+D+S	9.653	10.418
+D+0.750Lr+0.750L	1.658	1.749
+D+0.750L+0.750S	7.655	8.241
+0.60D	0.601	0.631

RICHMOND HOFFMAYER INC.
STRUCTURAL ENGINEERING

Project Title: VILLAGE NEST
Engineer: JJH
Project Descr: MULTI UNIT PROJECT

Project ID: 2017-0610

43A

Printed: 25 AUG 2017, 1:50PM

Wood Beam

File = D:\ENERCALC Projects\2017-0610.ec6
ENERCALC, INC. 1983-2017, Build:10.17.7.24, Ver:10.17.7.24
Licensee : RICHMOND HOFFMAYER

Lic. # : KW-06002886

Description : B15 - HEADER UNDER B3

Vertical Reactions

Support notation : Far left is #1 Values in KIPS

Load Combination	Support 1	Support 2
Lr Only	0.655	0.710
L Only	0.220	0.220
S Only	8.652	9.366

RICHMOND HOFFMAYER INC.
STRUCTURAL ENGINEERING

Project Title: VILLAGE NEST
Engineer: JJH
Project Descr: MULTI UNIT PROJECT

Project ID: 2017-0610
46A

Printed: 25 AUG 2017, 1:55PM

Steel Beam

File = D:\ENERCALC Projects\2017-0610.ec6
ENERCALC, INC. 1983-2017, Build:10.17.7.24, Ver:10.17.7.24
Lic. # : KW-06002886 Licensee : RICHMOND HOFFMAYER

Description : B17A - RIDGE SUPPORT

CODE REFERENCES

Calculations per AISC 360-10, IBC 2015, ASCE 7-10
Load Combination Set : ASCE 7-10

Material Properties

Analysis Method : Allowable Strength Design
Beam Bracing : Beam is Fully Braced against lateral-torsional buckling
Bending Axis : Major Axis Bending

Fy : Steel Yield : 50.0 ksi
E: Modulus : 29,000.0 ksi

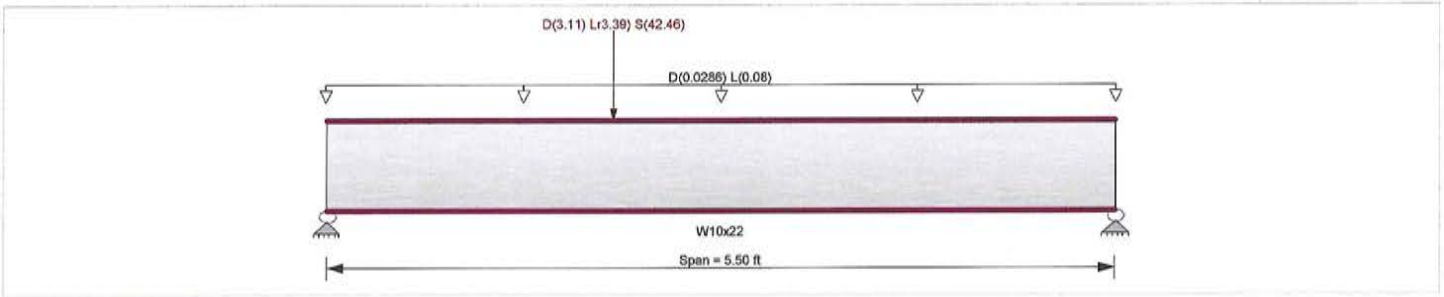

Applied Loads

Service loads entered. Load Factors will be applied for calculations.

Beam self weight calculated and added to loading
Uniform Load : D = 0.01430, L = 0.040 ksf, Tributary Width = 2.0 ft, (FLOOR)
Point Load : D = 3.110, Lr = 3.390, S = 42.460 k @ 2.0 ft, (RIDGE B4 ABV.)

DESIGN SUMMARY

Design OK

Maximum Bending Stress Ratio =	0.895 : 1	Maximum Shear Stress Ratio =	0.595 : 1
Section used for this span	W10x22	Section used for this span	W10x22
Ma : Applied	58.051 k-ft	Va : Applied	29.138 k
Mn / Omega : Allowable	64.870 k-ft	Vn/Omega : Allowable	48.960 k
Load Combination	+D+S	Load Combination	+D+S
Location of maximum on span	1.996ft	Location of maximum on span	0.000 ft
Span # where maximum occurs	Span # 1	Span # where maximum occurs	Span # 1

Maximum Deflection

Max Downward Transient Deflection	0.005 in	Ratio =	12,230 >=360
Max Upward Transient Deflection	0.000 in	Ratio =	0 <360
Max Downward Total Deflection	0.011 in	Ratio =	6197 >=240.
Max Upward Total Deflection	0.000 in	Ratio =	0 <240.0

Maximum Forces & Stresses for Load Combinations

Load Combination / Segment Length	Span #	Max Stress Ratios M	Max Stress Ratios V	Summary of Moment Values Mmax +	Mmax -	Ma Max	Mnx	Mnx/Omega	Cb	Rm	Summary of Shear Values Va Max	Vnx	Vnx/Omega
D Only													
Dsgn. L = 5.50 ft	1	0.064	0.043	4.13		4.13	108.33	64.87	1.00	1.00	2.12	73.44	48.96
+D+L													
Dsgn. L = 5.50 ft	1	0.068	0.048	4.41		4.41	108.33	64.87	1.00	1.00	2.34	73.44	48.96
+D+Lr													
Dsgn. L = 5.50 ft	1	0.130	0.087	8.43		8.43	108.33	64.87	1.00	1.00	4.28	73.44	48.96
+D+S													
Dsgn. L = 5.50 ft	1	0.895	0.595	58.05		58.05	108.33	64.87	1.00	1.00	29.14	73.44	48.96
+D+0.750Lr+0.750L													
Dsgn. L = 5.50 ft	1	0.117	0.080	7.57		7.57	108.33	64.87	1.00	1.00	3.90	73.44	48.96
+D+0.750L+0.750S													
Dsgn. L = 5.50 ft	1	0.690	0.461	44.78		44.78	108.33	64.87	1.00	1.00	22.55	73.44	48.96
+0.60D													
Dsgn. L = 5.50 ft	1	0.038	0.026	2.48		2.48	108.33	64.87	1.00	1.00	1.27	73.44	48.96

Overall Maximum Deflections

Load Combination	Span	Max. "-" Defl	Location in Span	Load Combination	Max. "+" Defl	Location in Span
+D+Lr	1	0.0107	2.561		0.0000	0.000

Vertical Reactions

Support notation : Far left is #1 Values in KIPS

Load Combination	Support 1	Support 2
Overall MAXimum	29.138	16.710
Overall MINimum	0.220	0.220
D Only	2.118	1.270

Steel Beam

Description : B17A - RIDGE SUPPORT

Vertical Reactions

Support notation : Far left is #1 Values in KIPS

Load Combination	Support 1	Support 2
+D+L	2.338	1.490
+D+Lr	4.276	2.503
+D+S	29.138	16.710
+D+0.750Lr+0.750L	3.901	2.360
+D+0.750L+0.750S	22.548	13.015
+0.60D	1.271	0.762
Lr Only	2.157	1.233
L Only	0.220	0.220
S Only	27.020	15.440

RICHMOND HOFFMAYER INC.
STRUCTURAL ENGINEERING

PROJECT	FELDSPAR LOWER	JOB	2017-0610
CLIENT	VILLAGE NEST		
ADDRESS	EDEN, UTAH		
DESIGN	HUUM		
ENGINEER	J.H.	DATE	6/16/2017
	RICHMOND PE 49628 HOFFMAYER SE 3935	SHEET	2 OF

103A - FELDSPAR UNIT 1G
MIRROR

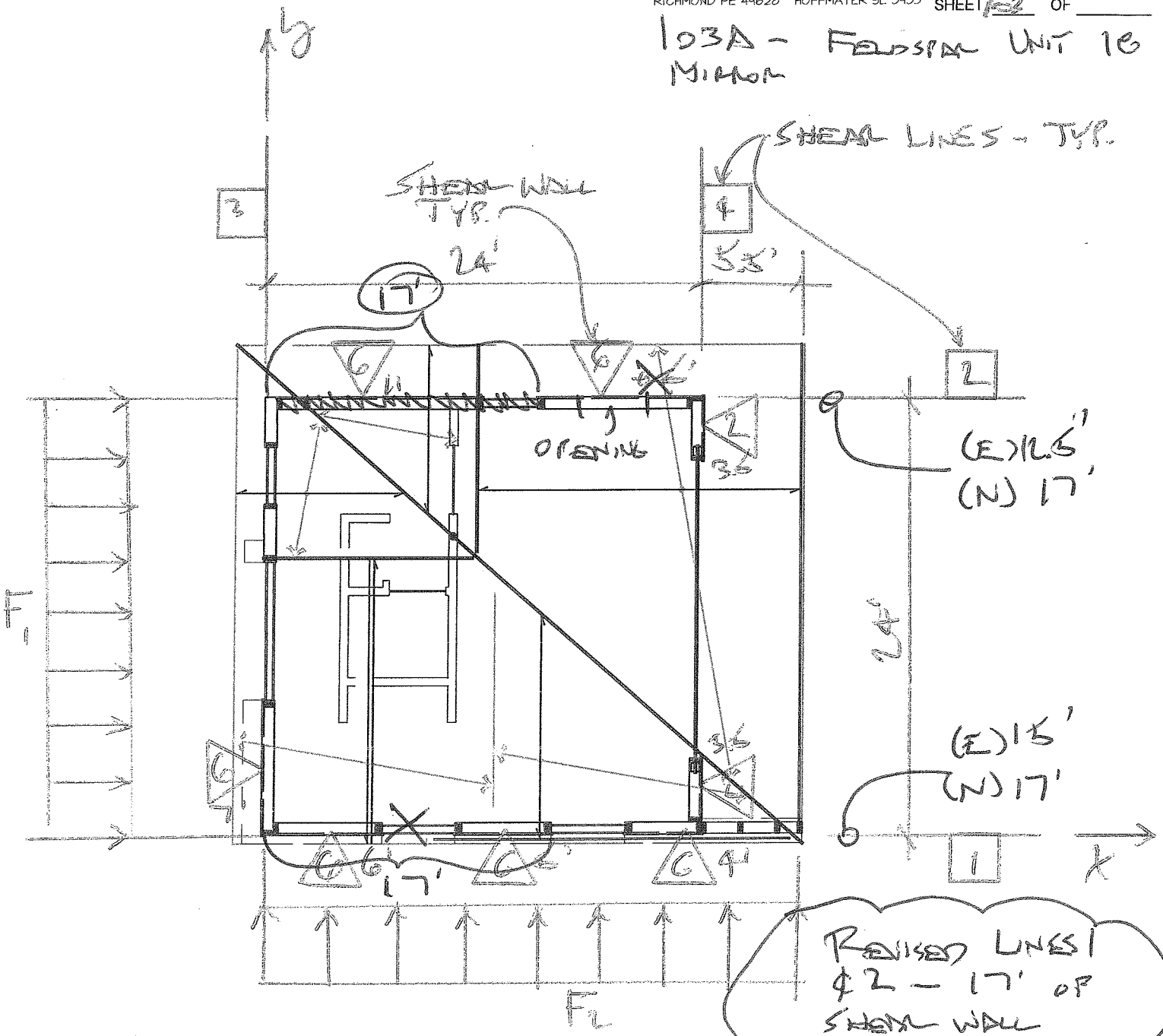

REVISED LINE 1 & 2 - 17' OF SHEAR WALL
V = 169 PLF
6 OK

* SHEAR WALL NOTE - COMPARE LENGTHS PER LINE W/ FELDSPAR LVL - USE MIN LENGTH / LINE

4425 CANOGA AVENUE WOODLAND HILLS CA 91364
PHONE (818) 347-7008 FAX (818) 883-8869
info@RichmondHoffmayer.com

RICHMOND HOFFMAYER INC.
STRUCTURAL ENGINEERING

PROJECT	FELDSPAR LOWER	JOB	2017-0610
CLIENT	VILLAGE NEST		
ADDRESS	EDEN, UTAH		
DESIGN	HUUM		
ENGINEER	J.H.	DATE	6/16/2017
	RICHMOND PE 49628 HOFFMAYER SE 3935	SHEET	4 OF

104A - FELDSPAR UNIT 1-E
MIRROR

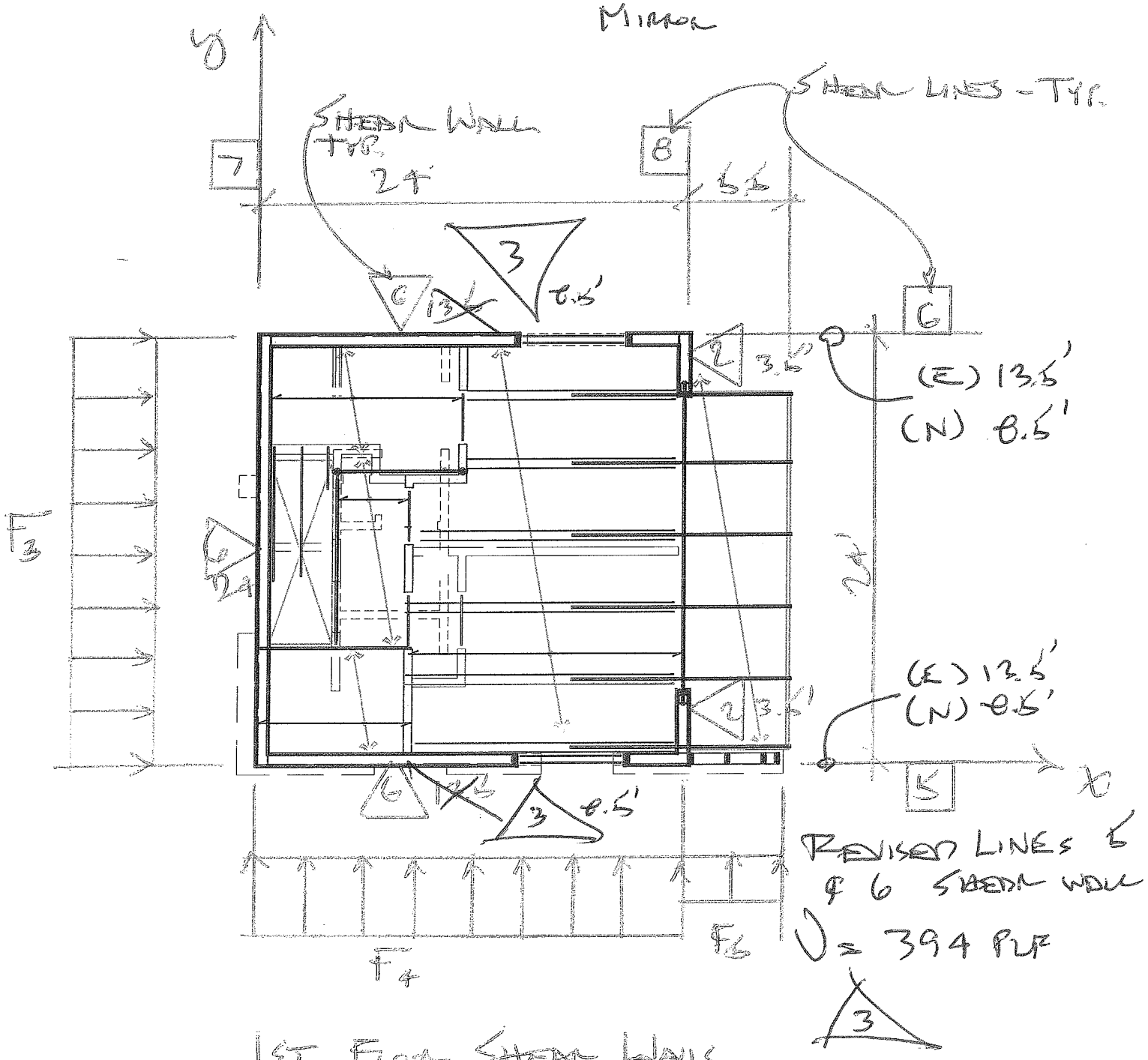

1ST FLOOR SHEAR WALLS

FELDSPAR LVN

N.T.S.

4425 CANOGA AVENUE WOODLAND HILLS CA 91364
PHONE (818) 347-7008 FAX (818) 883-8869
Info@RichmondHoffmayer.com

RICHMOND HOFFMAYER INC.
STRUCTURAL ENGINEERING

DATE 6/30/2017
SHEET _____

SEISMIC OVERTURNING DESIGN:

ASD LEVEL FORCES

USE EQUATION ASCE 7-11 12.4.2.3 #8

(0.6 - 0.14 Sds) D + 0.7 ρ Qe

Sds = 0.633

0.6 - 0.14 Sds = 0.511

USE THE LESSER OF ICC-ES AND LARR VALUES FOR HOLD DOWNS...CAPACITY IS BASED ON 0.75 x HOLD DOWN ALLOWABLE STRESS DESIGN CAPACITY

LINE #		LENGTH	HEIGHT	ADJUSTED ASD	OVERTURNING	0.7 ρ Qe	WEIGHT	ADD LOAD	ADD LOAD	(0.6-0.14Sds) D RST	OVERTURNING	+/- LEVER ARM	ADDED UPLIFT	WALL	NET UPLIFT	HOLDOWN	CAPACITY
#		ft	ft	plf	ft-lb	lb	plf	plf	lb	ft-lb	ft-lb	ft	lb	ABV.	lb	TYPE	lb
1	A	6.00	10.00	192.38	11542.8	1923.8	150.0	370.0		4786.8	6756.0	-0.50		-	1228.4	MST37	2032.5
1	B	5.00	10.00	192.38	9619.0	1923.8	150.0	370.0		3324.2	6294.8	-0.50		-	1398.8	MST37	2032.5
1	C	4.00	10.00	192.38	7695.2	1923.8	150.0	100.0		1022.8	6672.4	-0.50		-	1906.4	MST37	2032.5
2	A	5.50	10.00	230.86	12697.1	2308.6	150.0	100.0		1933.8	10763.3	-0.50		-	2152.7	MST48	3153.8
2	B	7.00	10.00	230.86	16159.9	2308.6	150.0	50.0		2505.9	13654.0	-0.50		-	2100.6	MST48	3153.8
3	A	7.00	10.00	307.43	21519.9	3074.3	150.0	50.0		2505.9	19014.0	-0.50		-	2925.2	MST48	3153.8
4	A	3.50	10.00	464.48	16256.7	4644.8	150.0	100.0		783.1	15473.6	-0.50		-	5157.9	CMST12-45	6911.3
4	B	3.50	10.00	464.48	16256.7	4644.8	150.0	100.0		783.1	15473.6	-0.50		-	5157.9	CMST12-45	6911.3
5	A	13.50	9.00	55.77	6775.8	501.9	100.0	100.0		9320.5	-2544.7	-0.50	1228.36	1A	1032.6	HDQ8-SDS3	6558.0
6	A	13.50	9.00	17.29	2101.0	155.6	100.0	100.0		9320.5	-7219.5	-0.50	2152.66	2A	1597.3	HDQ8-SDS3	6558.0
7	A	24.00	9.00	-199.26	-43041.0	-1793.4	100.0	100.0		29457.4	-72498.4	-0.50	2925.23	3A	-159.8	HDQ8-SDS3	6558.0
8	A	3.50	9.00	70.83	2231.0	637.4	100.0	100.0		626.5	1604.5	-0.50	5157.87	4A	5692.7	HHDQ14-SDS2.5	10282.5
8	B	3.50	9.00	70.83	2231.0	637.4	100.0	100.0		626.5	1604.5	-0.50	5157.87	4B	5692.7	HHDQ14-SDS2.5	10282.5
														-		-	
														-		-	
														-		-	
														-		-	
														-		-	

UPLIFT ≈ 1597 × 13.5/8.5 = 2536 lb

HDQ8 CAP ≤ 6558 lb O.K.

129A

4425 CANOGA AVENUE WOODLAND HILLS CA 91364
PHONE (818) 347-7008 FAX (818) 883-8869

RICHMOND HOFFMAYER INC.
STRUCTURAL ENGINEERING

PROJECT	FELDSPAR LOWER	JOB	2017-0610
CLIENT	VILLAGE NEST		
ADDRESS	EDEN, UTAH		
DESIGN	HUUM		
ENGINEER	J.H.	DATE	6/16/2017
	RICHMOND PE 49628 HOFFMAYER SE 3935	SHEET	23 OF

235 A

FELDSPAR UNIT 1E

MIRROR

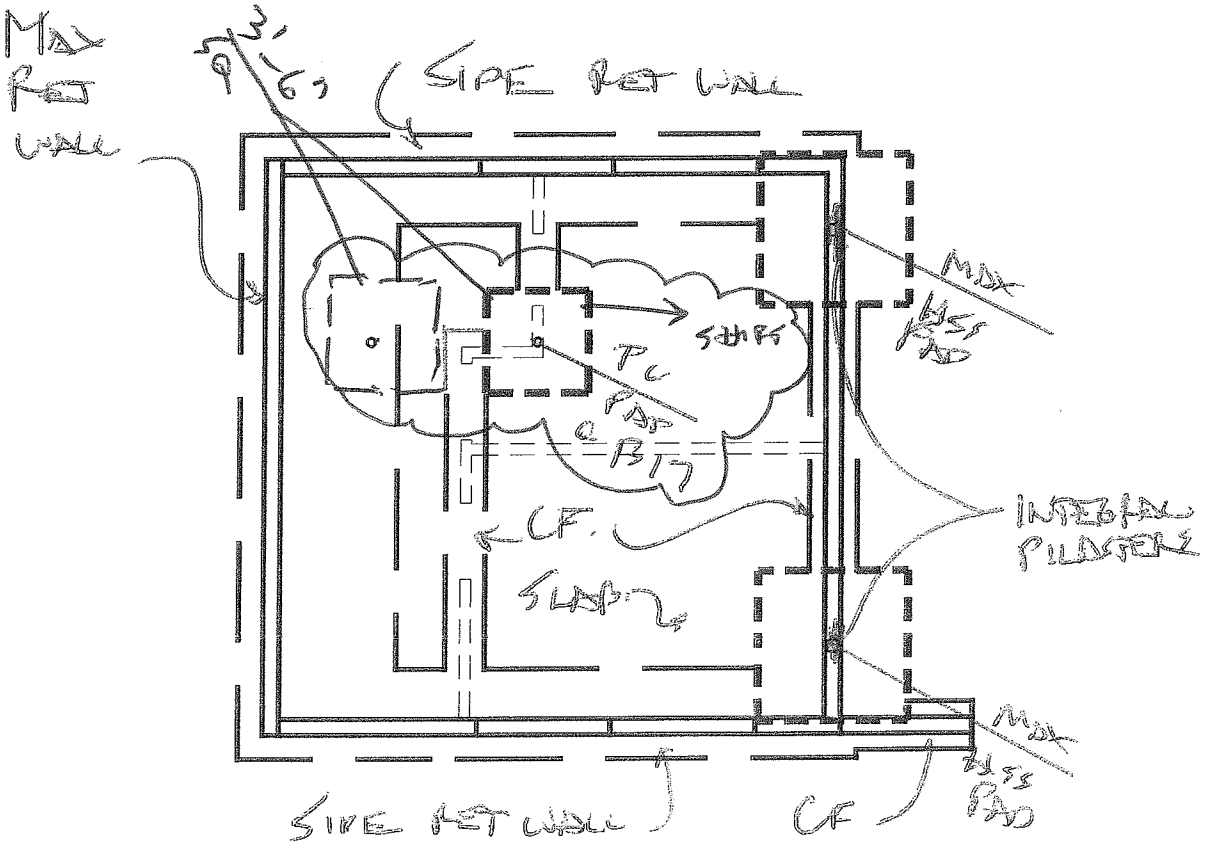

FELDSPAR LVN

FOUNDATION PLAN

FELDSPAR LVN

NTS

4425 CANOGA AVENUE WOODLAND HILLS CA 91364
PHONE (818) 347-7008 FAX (818) 883-8869
Info@RichmondHoffmayer.com

RICHMOND HOFFMAYER INC.
STRUCTURAL ENGINEERING

Project Title: VILLAGE NEST
Engineer: JJH
Project Descr: MULTI UNIT PROJECT

Project ID: 2017-0610
235 A

Printed: 25 AUG 2017, 3:06PM

General Footing

File = D:\ENERCALC Projects\2017-0610.ec6
ENERCALC, INC. 1983-2017, Build:10.17.7.24, Ver:10.17.7.24

Lic. # : KW-06002886 — Licensee : RICHMOND HOFFMAYER

Description : MAX PAD: FELDSPAR LVN FLIP UNIT 18

Code References

Calculations per ACI 318-14, IBC 2015, CBC 2016, ASCE 7-10
Load Combinations Used : ASCE 7-10

General Information

Material Properties

f'c : Concrete 28 day strength	=	2.50 ksi
fy : Rebar Yield	=	60.0 ksi
Ec : Concrete Elastic Modulus	=	3,122.0 ksi
Concrete Density	=	145.0 pcf
φ Values Flexure	=	0.90
Shear	=	0.850

Analysis Settings

Min Steel % Bending Reinf.	=	
Min Allow % Temp Reinf.	=	0.00180
Min. Overturning Safety Factor	=	1.50 : 1
Min. Sliding Safety Factor	=	1.50 : 1
Add Ftg Wt for Soil Pressure	:	No
Use ftg wt for stability, moments & shears	:	No
Add Pedestal Wt for Soil Pressure	:	No
Use Pedestal wt for stability, mom & shear	:	No

Soil Design Values

Allowable Soil Bearing	=	2.50 ksf
Increase Bearing By Footing Weight	=	No
Soil Passive Resistance (for Sliding)	=	180.0 pcf
Soil/Concrete Friction Coeff.	=	0.450

Increases based on footing Depth

Footing base depth below soil surface	=	2.0 ft
Allow press. increase per foot of depth	=	ksf
when footing base is below	=	ft

Increases based on footing plan dimension

Allowable pressure increase per foot of depth	=	ksf
when max. length or width is greater than	=	ft

Dimensions

Width parallel to X-X Axis	=	3.50 ft
Length parallel to Z-Z Axis	=	3.50 ft
Footing Thickness	=	24.0 in

Pedestal dimensions...

px : parallel to X-X Axis	=	in
pz : parallel to Z-Z Axis	=	in
Height	=	in

Rebar Centerline to Edge of Concrete...

at Bottom of footing	=	3.0 in

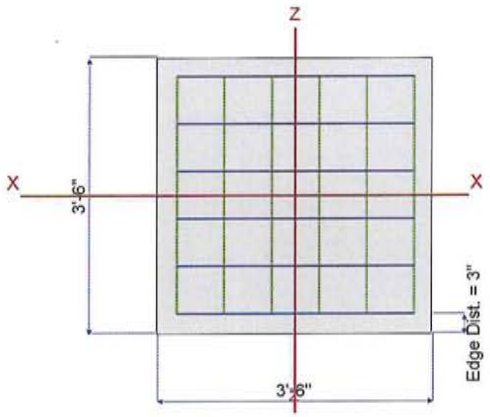

Reinforcing

Bars parallel to X-X Axis			
Number of Bars	=		6
Reinforcing Bar Size	=	#	5
Bars parallel to Z-Z Axis			
Number of Bars	=		6
Reinforcing Bar Size	=	#	5

Bandwidth Distribution Check (ACI 15.4.4.2)

Direction Requiring Closer Separation	n/a
# Bars required within zone	n/a
# Bars required on each side of zone	n/a

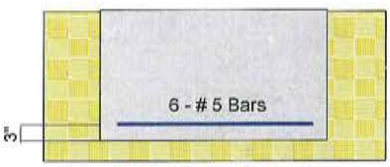

X-X Section Looking to +Z

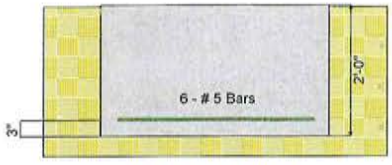

Z-Z Section Looking to +X

Applied Loads

		D	Lr	L	S	W	E	H	
P : Column Load	=	2.118	2.157	0.220	27.020				k
OB : Overburden	=								ksf
M-xx	=								k-ft
M-zz	=								k-ft
V-x	=								k
V-z	=								k

RICHMOND HOFFMAYER INC.
STRUCTURAL ENGINEERING

Project Title: VILLAGE NEST
Engineer: JJH
Project Descr: MULTI UNIT PROJECT

Project ID: 2017-0610
236 B

Printed: 25 AUG 2017, 3:06PM

General Footing

File = D:\ENERCALC Projects\2017-0610.ec6
ENERCALC, INC. 1983-2017, Build:10.17.7.24, Ver:10.17.7.24
Lic. # : KW-06002886 Licensee : RICHMOND HOFFMAYER

Description : MAX PAD: FELDSPAR LVN FLIP UNIT 18

DESIGN SUMMARY

Design OK

	Min. Ratio	Item	Applied	Capacity	Governing Load Combination
PASS	0.9516	Soil Bearing	2.379 ksf	2.50 ksf	+D+S about Z-Z axis
PASS	n/a	Overturning - X-X	0.0 k-ft	0.0 k-ft	No Overturning
PASS	n/a	Overturning - Z-Z	0.0 k-ft	0.0 k-ft	No Overturning
PASS	n/a	Sliding - X-X	0.0 k	0.0 k	No Sliding
PASS	n/a	Sliding - Z-Z	0.0 k	0.0 k	No Sliding
PASS	n/a	Uplift	0.0 k	0.0 k	No Uplift
PASS	0.1177	Z Flexure (+X)	5.735 k-ft/ft	48.725 k-ft/ft	+1.20D+0.50L+1.60S
PASS	0.1177	Z Flexure (-X)	5.735 k-ft/ft	48.725 k-ft/ft	+1.20D+0.50L+1.60S
PASS	0.1177	X Flexure (+Z)	5.735 k-ft/ft	48.725 k-ft/ft	+1.20D+0.50L+1.60S
PASS	0.1177	X Flexure (-Z)	5.735 k-ft/ft	48.725 k-ft/ft	+1.20D+0.50L+1.60S
PASS	n/a	1-way Shear (+X)	0.0 psi	85.0 psi	n/a
PASS	0.0	1-way Shear (-X)	0.0 psi	0.0 psi	n/a
PASS	n/a	1-way Shear (+Z)	0.0 psi	85.0 psi	n/a
PASS	n/a	1-way Shear (-Z)	0.0 psi	85.0 psi	n/a
PASS	n/a	2-way Punching	19.508 psi	85.0 psi	+1.20D+0.50L+1.60S

Detailed Results

Soil Bearing

Rotation Axis & Load Combination...	Gross Allowable	Xecc (in)	Zecc (in)	Actual Soil Bearing Stress @ Location Bottom, -Z	Top, +Z	Left, -X	Right, +X	Actual / Allow Ratio
X-X, D Only	2.50	n/a	0.0	0.1729	0.1729	n/a	n/a	0.069
X-X, +D+L	2.50	n/a	0.0	0.1909	0.1909	n/a	n/a	0.076
X-X, +D+Lr	2.50	n/a	0.0	0.3490	0.3490	n/a	n/a	0.140
X-X, +D+S	2.50	n/a	0.0	2.379	2.379	n/a	n/a	0.952
X-X, +D+0.750Lr+0.750L	2.50	n/a	0.0	0.3184	0.3184	n/a	n/a	0.127
X-X, +D+0.750L+0.750S	2.50	n/a	0.0	1.841	1.841	n/a	n/a	0.736
X-X, +0.60D	2.50	n/a	0.0	0.1037	0.1037	n/a	n/a	0.041
Z-Z, D Only	2.50	0.0	n/a	n/a	n/a	0.1729	0.1729	0.069
Z-Z, +D+L	2.50	0.0	n/a	n/a	n/a	0.1909	0.1909	0.076
Z-Z, +D+Lr	2.50	0.0	n/a	n/a	n/a	0.3490	0.3490	0.140
Z-Z, +D+S	2.50	0.0	n/a	n/a	n/a	2.379	2.379	0.952
Z-Z, +D+0.750Lr+0.750L	2.50	0.0	n/a	n/a	n/a	0.3184	0.3184	0.127
Z-Z, +D+0.750L+0.750S	2.50	0.0	n/a	n/a	n/a	1.841	1.841	0.736
Z-Z, +0.60D	2.50	0.0	n/a	n/a	n/a	0.1037	0.1037	0.041

Footing Flexure

Flexure Axis & Load Combination	Mu k-ft	Side	Tension Surface	As Req'd in^2	Gvrn. As in^2	Actual As in^2	Phi*Mn k-ft	Status
X-X, +1.40D	0.3707	+Z	Bottom	0.5184	Min Temp %	0.5314	48.725	OK
X-X, +1.40D	0.3707	-Z	Bottom	0.5184	Min Temp %	0.5314	48.725	OK
X-X, +1.20D+0.50Lr+1.60L	0.4965	+Z	Bottom	0.5184	Min Temp %	0.5314	48.725	OK
X-X, +1.20D+0.50Lr+1.60L	0.4965	-Z	Bottom	0.5184	Min Temp %	0.5314	48.725	OK
X-X, +1.20D+1.60L+0.50S	2.050	+Z	Bottom	0.5184	Min Temp %	0.5314	48.725	OK
X-X, +1.20D+1.60L+0.50S	2.050	-Z	Bottom	0.5184	Min Temp %	0.5314	48.725	OK
X-X, +1.20D+1.60Lr+0.50L	0.7629	+Z	Bottom	0.5184	Min Temp %	0.5314	48.725	OK
X-X, +1.20D+1.60Lr+0.50L	0.7629	-Z	Bottom	0.5184	Min Temp %	0.5314	48.725	OK
X-X, +1.20D+1.60Lr	0.7491	+Z	Bottom	0.5184	Min Temp %	0.5314	48.725	OK
X-X, +1.20D+1.60Lr	0.7491	-Z	Bottom	0.5184	Min Temp %	0.5314	48.725	OK
X-X, +1.20D+0.50L+1.60S	5.735	+Z	Bottom	0.5184	Min Temp %	0.5314	48.725	OK
X-X, +1.20D+0.50L+1.60S	5.735	-Z	Bottom	0.5184	Min Temp %	0.5314	48.725	OK
X-X, +1.20D+1.60S	5.722	+Z	Bottom	0.5184	Min Temp %	0.5314	48.725	OK
X-X, +1.20D+1.60S	5.722	-Z	Bottom	0.5184	Min Temp %	0.5314	48.725	OK
X-X, +1.20D+0.50Lr+0.50L	0.4663	+Z	Bottom	0.5184	Min Temp %	0.5314	48.725	OK
X-X, +1.20D+0.50Lr+0.50L	0.4663	-Z	Bottom	0.5184	Min Temp %	0.5314	48.725	OK
X-X, +1.20D+0.50L+0.50S	2.020	+Z	Bottom	0.5184	Min Temp %	0.5314	48.725	OK
X-X, +1.20D+0.50L+0.50S	2.020	-Z	Bottom	0.5184	Min Temp %	0.5314	48.725	OK
X-X, +1.20D+0.50L+0.20S	1.007	+Z	Bottom	0.5184	Min Temp %	0.5314	48.725	OK
X-X, +1.20D+0.50L+0.20S	1.007	-Z	Bottom	0.5184	Min Temp %	0.5314	48.725	OK
X-X, +0.90D	0.2383	+Z	Bottom	0.5184	Min Temp %	0.5314	48.725	OK
X-X, +0.90D	0.2383	-Z	Bottom	0.5184	Min Temp %	0.5314	48.725	OK

RICHMOND HOFFMAYER INC.
STRUCTURAL ENGINEERING

Project Title: VILLAGE NEST
Engineer: JJH
Project Descr: MULTI UNIT PROJECT

Project ID: 2017-0610

235 c

Printed: 25 AUG 2017, 3:06PM

General Footing

File = D:\ENERCALC Projects\2017-0610.ec6
ENERCALC, INC. 1983-2017, Build:10.17.7.24, Ver:10.17.7.24

Lic. # : KW-06002886 Licensee : RICHMOND HOFFMAYER

Description : MAX PAD: FELDSPAR LVN FLIP UNIT 18

Footing Flexure

Flexure Axis & Load Combination	Mu k-ft	Side	Tension Surface	As Req'd in^2	Gvrn. As in^2	Actual As in^2	Phi*Mn k-ft	Status
Z-Z, +1.40D	0.3707	-X	Bottom	0.5184	Min Temp %	0.5314	48.725	OK
Z-Z, +1.40D	0.3707	+X	Bottom	0.5184	Min Temp %	0.5314	48.725	OK
Z-Z, +1.20D+0.50Lr+1.60L	0.4965	-X	Bottom	0.5184	Min Temp %	0.5314	48.725	OK
Z-Z, +1.20D+0.50Lr+1.60L	0.4965	+X	Bottom	0.5184	Min Temp %	0.5314	48.725	OK
Z-Z, +1.20D+1.60L+0.50S	2.050	-X	Bottom	0.5184	Min Temp %	0.5314	48.725	OK
Z-Z, +1.20D+1.60L+0.50S	2.050	+X	Bottom	0.5184	Min Temp %	0.5314	48.725	OK
Z-Z, +1.20D+1.60Lr+0.50L	0.7629	-X	Bottom	0.5184	Min Temp %	0.5314	48.725	OK
Z-Z, +1.20D+1.60Lr+0.50L	0.7629	+X	Bottom	0.5184	Min Temp %	0.5314	48.725	OK
Z-Z, +1.20D+1.60Lr	0.7491	-X	Bottom	0.5184	Min Temp %	0.5314	48.725	OK
Z-Z, +1.20D+1.60Lr	0.7491	+X	Bottom	0.5184	Min Temp %	0.5314	48.725	OK
Z-Z, +1.20D+0.50L+1.60S	5.735	-X	Bottom	0.5184	Min Temp %	0.5314	48.725	OK
Z-Z, +1.20D+0.50L+1.60S	5.735	+X	Bottom	0.5184	Min Temp %	0.5314	48.725	OK
Z-Z, +1.20D+1.60S	5.722	-X	Bottom	0.5184	Min Temp %	0.5314	48.725	OK
Z-Z, +1.20D+1.60S	5.722	+X	Bottom	0.5184	Min Temp %	0.5314	48.725	OK
Z-Z, +1.20D+0.50Lr+0.50L	0.4663	-X	Bottom	0.5184	Min Temp %	0.5314	48.725	OK
Z-Z, +1.20D+0.50Lr+0.50L	0.4663	+X	Bottom	0.5184	Min Temp %	0.5314	48.725	OK
Z-Z, +1.20D+0.50L+0.50S	2.020	-X	Bottom	0.5184	Min Temp %	0.5314	48.725	OK
Z-Z, +1.20D+0.50L+0.50S	2.020	+X	Bottom	0.5184	Min Temp %	0.5314	48.725	OK
Z-Z, +1.20D+0.50L+0.20S	1.007	-X	Bottom	0.5184	Min Temp %	0.5314	48.725	OK
Z-Z, +1.20D+0.50L+0.20S	1.007	+X	Bottom	0.5184	Min Temp %	0.5314	48.725	OK
Z-Z, +0.90D	0.2383	-X	Bottom	0.5184	Min Temp %	0.5314	48.725	OK
Z-Z, +0.90D	0.2383	+X	Bottom	0.5184	Min Temp %	0.5314	48.725	OK

One Way Shear

Load Combination...	Vu @ -X	Vu @ +X	Vu @ -Z	Vu @ +Z	Vu:Max	Phi Vn	Vu / Phi*Vn	Status
+1.40D	0.00 psi	0.00 psi	0.00 psi	0.00 psi	0.00 psi	85.00 psi	0.00	0.00
+1.20D+0.50Lr+1.60L	0.00 psi	0.00 psi	0.00 psi	0.00 psi	0.00 psi	85.00 psi	0.00	0.00
+1.20D+1.60L+0.50S	0.00 psi	0.00 psi	0.00 psi	0.00 psi	0.00 psi	85.00 psi	0.00	0.00
+1.20D+1.60Lr+0.50L	0.00 psi	0.00 psi	0.00 psi	0.00 psi	0.00 psi	85.00 psi	0.00	0.00
+1.20D+1.60Lr	0.00 psi	0.00 psi	0.00 psi	0.00 psi	0.00 psi	85.00 psi	0.00	0.00
+1.20D+0.50L+1.60S	0.00 psi	0.00 psi	0.00 psi	0.00 psi	0.00 psi	85.00 psi	0.00	0.00
+1.20D+1.60S	0.00 psi	0.00 psi	0.00 psi	0.00 psi	0.00 psi	85.00 psi	0.00	0.00
+1.20D+0.50Lr+0.50L	0.00 psi	0.00 psi	0.00 psi	0.00 psi	0.00 psi	85.00 psi	0.00	0.00
+1.20D+0.50L+0.50S	0.00 psi	0.00 psi	0.00 psi	0.00 psi	0.00 psi	85.00 psi	0.00	0.00
+1.20D+0.50L+0.20S	0.00 psi	0.00 psi	0.00 psi	0.00 psi	0.00 psi	85.00 psi	0.00	0.00
+0.90D	0.00 psi	0.00 psi	0.00 psi	0.00 psi	0.00 psi	85.00 psi	0.00	0.00

Two-Way "Punching" Shear

All units k

Load Combination...	Vu	Phi*Vn	Vu / Phi*Vn	Status
+1.40D	1.26 psi	170.00 psi	0.007416	OK
+1.20D+0.50Lr+1.60L	1.69 psi	170.00 psi	0.009934	OK
+1.20D+1.60L+0.50S	6.97 psi	170.00 psi	0.04103	OK
+1.20D+1.60Lr+0.50L	2.60 psi	170.00 psi	0.01526	OK
+1.20D+1.60Lr	2.55 psi	170.00 psi	0.01499	OK
+1.20D+0.50L+1.60S	19.51 psi	170.00 psi	0.1148	OK
+1.20D+1.60S	19.46 psi	170.00 psi	0.1145	OK
+1.20D+0.50Lr+0.50L	1.59 psi	170.00 psi	0.009329	OK
+1.20D+0.50L+0.50S	6.87 psi	170.00 psi	0.04042	OK
+1.20D+0.50L+0.20S	3.43 psi	170.00 psi	0.02015	OK
+0.90D	0.81 psi	170.00 psi	0.004767	OK

RICHMOND HOFFMAYER INC.
STRUCTURAL ENGINEERING

PROJECT	VILLAGE NEST	JOB	2017-0610
CLIENT	VILLAGE NEST		
ADDRESS	EDEN, UTAH		
DESIGN	HUUM		
ENGINEER	J.H.	DATE	8/18/2017
	RICHMOND PE 44628 HOFFMAYER SE 3455	SHEET	A1 OF

THERMAL BREAK DEVICE AT BALCONY:

TRY ARMATHERM FRR THERMAL BREAK

W = 1344 PLF (SNOW/LIVE/DEAD)

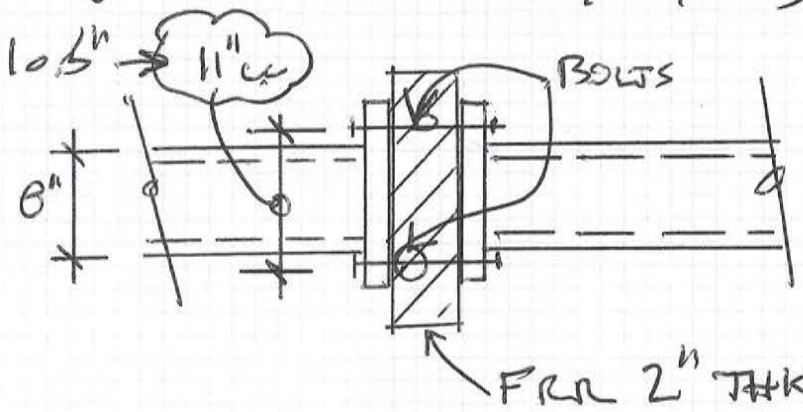

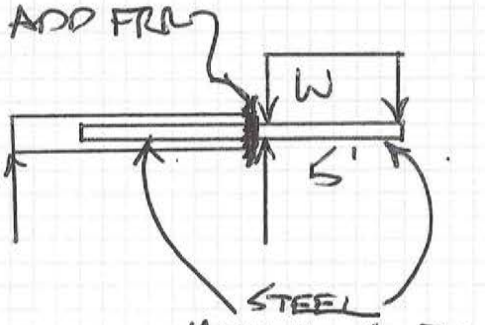

BEAM #9
IN CALCS
PG #33

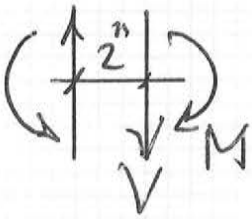

$V = 1344 \times 5 = 6720$ lb

$M = 1344 \times 5^2/2 = 16800$ ft-lb

FRR $E = 1450$ ksi
$F_c = 45$ ksi
$F_v = 16$ ksi

SEE NEXT PAGE

BOLTS: $T = 16800 \times 12" / (11" \times 2) = 9163$ lb/bolt

$V = 6720/4 = 1680$ lb/bolt

TRY 5/8" ϕ A325 MB $r_n/\Omega_v = 7.36$ k SHEAR/bolt

$r_n/\Omega = 13.8$ k TENSION/bolt

4425 CANOGA AVENUE WOODLAND HILLS CA 91364
PHONE (818) 347-7008 FAX (818) 883-8869
Info@RichmondHoffmayer.com

RICHMOND HOFFMAYER INC.
STRUCTURAL ENGINEERING

PROJECT	VILLAGE NEST	JOB	2017-0610
CLIENT	VILLAGE NEST		
ADDRESS	EDEN, UTAH		
DESIGN	HUUM		
ENGINEER	J.H.	DATE	8/18/2017
	RICHMOND PE 44628 HOFFMAYER SE 3455	SHEET	1 OF

COMBINED TENSION & SHEAR $R_n = F'_{nt} A_b$ $\Omega = 2.0$

$$F'_{nt} = 1.3F_{nt} - \frac{\Omega F_{nt}}{F_{nv}} f_v$$

$$= 1.3(90) - \frac{2(90)}{48}\left(1.6\,k / 0.307\,in^2\right)$$

$$= 96.47\,ksi > F_{nt} \rightarrow \text{USE } F_{nt} = 90\,ksi$$

$$R_n = 90\,(0.307) / 2_{ASD} = \underline{13.8\,k}$$ AVAILABLE TENSION/bolt

COMPARE:

LOAD	CAPACITY	
$T = 9.2\,k$	$13.8\,k$	✓
$V = 1.7\,k$	$7.36\,k$	✓

USE (4) 5/8" ø A325 BOLTS PER CONNECTION

* TRY $10\frac{1}{2}$" CL. → $T = 9163 \times 11/105 = 9599\,lb$

$T = \underline{9.6k} < 13.8k$ ✓

TRY 9" × 13" ø

$b = \underline{9"}$

$d = 13 - 1\frac{1}{4} = \underline{11.75"}$ $\Big\}$ $A = bd = \underline{105.75\,in^2}$

4425 CANOGA AVENUE WOODLAND HILLS CA 91364
PHONE (818) 347-7008 FAX (818) 883-8869
Info@RichmondHoffmayer.com

RICHMOND HOFFMAYER INC.
STRUCTURAL ENGINEERING

PROJECT	VILLAGE NEST	JOB	2017-0610
CLIENT	VILLAGE NEST		
ADDRESS	EDEN, UTAH		
DESIGN	HUUM		
ENGINEER	J.H.	DATE	8/18/2017
	RICHMOND PE 44628 HOFFMAYER SE 3455	SHEET	A3 OF

CHECK FRR

$n = 29000/1450 = 20$

$\rho = 2(0.307)/105.75$

$= 0.0058$

$\rho n = 0.1161$

$k = \sqrt{\rho n^2 + 2\rho n} - \rho n$

$= 0.3796$

$j = 1 - k/3 = 0.8735$

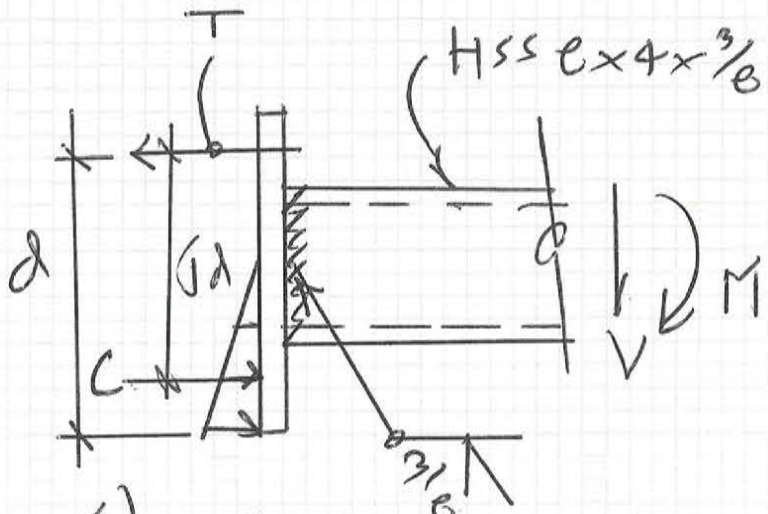

$jk = 0.3314$

$M_{ASD} = 16.8 \times 12 = 201600$ IN-LB

$f_c = 2M_{ASD}/bd^2jk = \frac{2(201600)}{9(11.75^2)0.3316} = 979$ PSI

$F_c = 4500$ PSI CAPACITY F.S. = 45.9 ! OK

* FRR OK

$kd = 0.3796(11.75) = 4.46"$

$f_{EDGE} = 979/4.46 \times (4.46 - 2.5)$

$= 430$ PSI

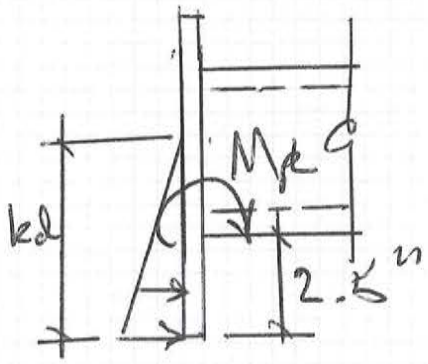

$M_{FR} = 430 \times (2.5^2/2)9$

$+ (979/4.46)\,2.5^2/2\,(2/3 \times 2.5)9$

$= 22303$ IN-LB

$f_{REQ'D} = 22303/0.6(36000) = 1.036\ in^3 \rightarrow t_{FR} \geq 0.63"$

TRY PL 7/8" FR

4425 CANOGA AVENUE WOODLAND HILLS CA 91364
PHONE (818) 347-7008 FAX (818) 883-8869
Info@RichmondHoffmayer.com

RICHMOND HOFFMAYER INC.
STRUCTURAL ENGINEERING

PROJECT	VILLAGE NEST	JOB	2017-0610
CLIENT	VILLAGE NEST		
ADDRESS	EDEN, UTAH		
DESIGN	HUUM		
ENGINEER	J.H.	DATE	8/18/2017
	RICHMOND PE 44628 HOFFMAYER SE 3435	SHEET	A4 OF

$M_{PL} = (9599 \times 2) \times 1.25'' = \underline{\underline{2399.8 \text{ IN-LB}}}$

$S_{T\,REQ'D} = 2399.8 / 0.6(36000) = \underline{\underline{1.111 \text{ IN}^3}} \rightarrow t_{PL} \geq \underline{\underline{0.86''}}$

USE 9" × 13" × 7/8" THK A36 PL
AT THERMAL BREAK
w/ (4) 5/8"ø A325 BOLTS & FRR

4425 CANOGA AVENUE WOODLAND HILLS CA 91364
PHONE (818) 347-7008 FAX (818) 883-8869
info@RichmondHoffmayer.com

RICHMOND HOFFMAYER INC.
STRUCTURAL ENGINEERING

PROJECT	VILLAGE NEST	JOB	2017-0610
CLIENT	VILLAGE NEST		
ADDRESS	EDEN, UTAH		
DESIGN	HUUM		
ENGINEER	J.H.	DATE	8/18/2017
	RICHMOND PE 44628 HOFFMAYER SE 3435	SHEET	A6 OF

LIFT BALCONY 4" PER ARCH.

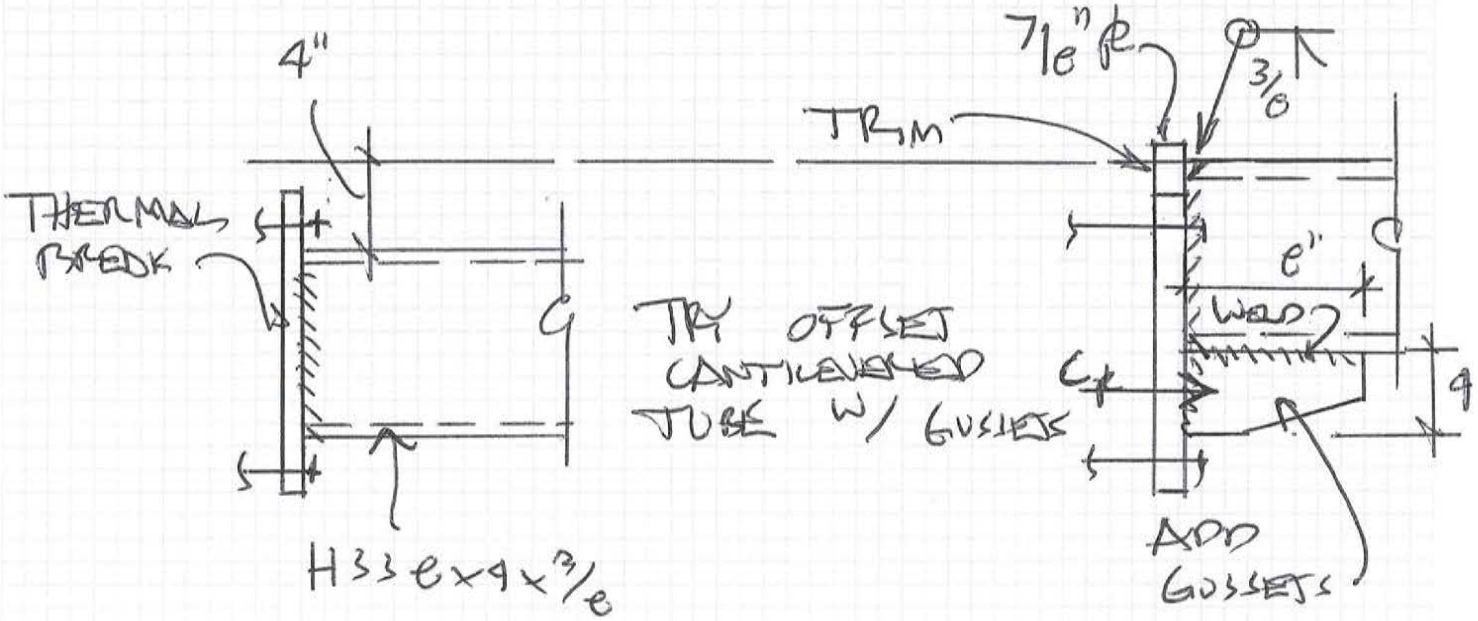

GUSSETS IN COMPRESSION

$C_{PL} = M/10" = \frac{16800 \times 12}{2 \times 10}$

$= \underline{10080 \text{ lb}}$

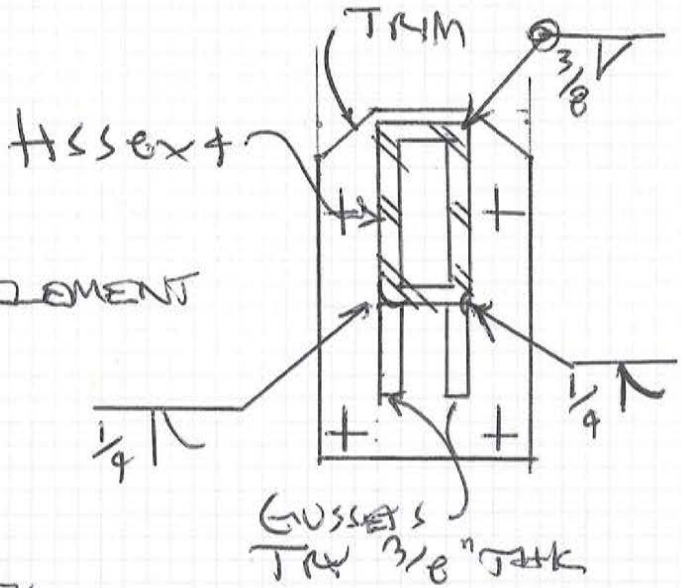

PER AISC UNSTIFFENED ELEMENT

$b/t = 4/\frac{3}{8} = 10.67$

$\lambda_r = 0.64\sqrt{k_c\, 29000/36}$

$k_c = 4/\sqrt{8/\frac{3}{8}} = 0.87 < 0.76$

USE $k_c = 0.76$

$\lambda_r = 15.836 > b/t$ OK. DESIGN PL AS NON-COMPACT

4425 CANOGA AVENUE WOODLAND HILLS CA 91364
PHONE (818) 347-7008 FAX (818) 883-8869
Info@RichmondHoffmayer.com

RICHMOND HOFFMAYER INC.
STRUCTURAL ENGINEERING

PROJECT	VILLAGE NEST	JOB	2017-0610
CLIENT	VILLAGE NEST		
ADDRESS	EDEN, UTAH		
DESIGN	HUUM		
ENGINEER	J.H.	DATE	8/18/2017
	RICHMOND PE 44628 HOFFMAYER SE 3435	SHEET	A6 OF

SLENDER UNSTIFFENED $b/t = 10.67$

$0.64\sqrt{\frac{0.76(29E3)}{36}} = 15.83 \longrightarrow Q_s = 1.0$

$\therefore P_n = F_{cr} A_g$

$Kl/r = 1 \times 8/r \qquad r = \sqrt{I/A} = \sqrt{\frac{\frac{1}{12}(4)^3/8)}{4(3/8)}} = \sqrt{\frac{0.0176}{1.5}}$

$r = 0.108$ IN

$Kl/r = \underline{73.9}$

$4.71\sqrt{\frac{29E3}{36(1)}} = 133.66 > Kl/r$

$\therefore F_{cr} = Q\left[0.65^{-8 F_y/F_e}\right]F_y$

$F_e = \pi^2 29E3/(Kl/r)^2 = 52.4$

$F_{cr} = 1\left[0.65^{-8 \times 36/52.4}\right]36 = \underline{16.27 \text{ ksi}}$

$P_n = 16.27 \times 1.5 = \underline{24.4 \text{ k}}$

$\Omega_c = 1.67 \longrightarrow P_n/\Omega_c = 24.4/1.67 = \underline{14.6 \text{ k CAPACITY}}$

$P_n/\Omega_c = \underline{14.6 \text{ k}} > \underline{10.0 \text{ k}}$ P $\longrightarrow$ 3/8" PL OK

$F_{WELD} = 10.80/8" = 1.26 \text{ k/in}$ } 5/16" FILLETS OK

$R_n/\Omega = 0.928(5)1 = 4.64 \text{ k/in}$

4425 CANOGA AVENUE WOODLAND HILLS CA 91364
PHONE (818) 347-7008 FAX (818) 883-8869
Info@RichmondHoffmayer.com