INSTALL GALVANIZED STEEL WIRE MESH ON WOOD OR STEEL POST TO SUPPORT A SILT FENCE OR FILTER BARRIER.

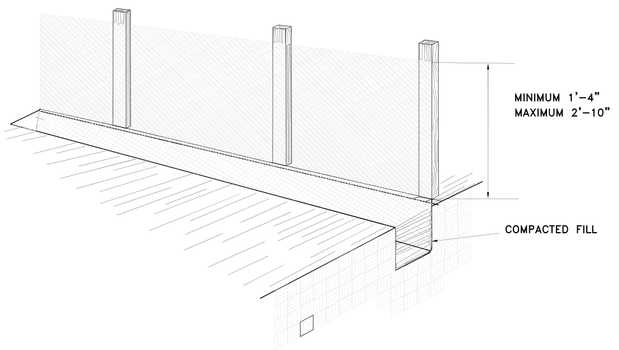

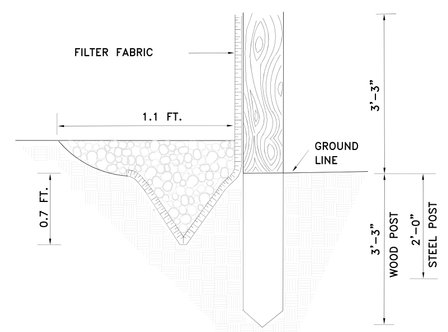

FILTER BARRIER
SCALE: N.T.S.

INLET PROTECTION

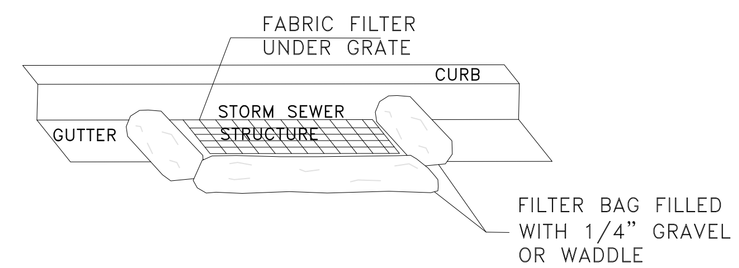

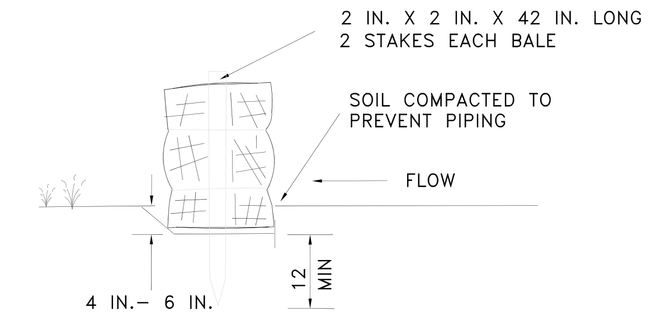

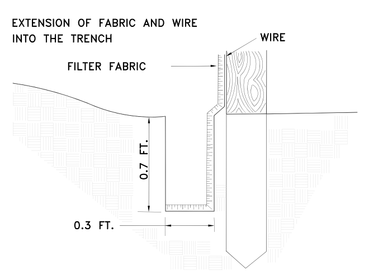

1-FILTER FABRIC - 3'-3" MINIMUM WIDTH
2-FENCE FUNCTIONS BEST IN SHEET FLOW CONDITIONS
3-REMOVE AND DISPOSE OF SEDIMENT WHEN ACCUMULATION REACH 50% FABRIC HEIGHT.
4-BACKFILL MIN 0.7 FT. THICK LAYER OF FREE DRAINING GRANULAR BACKFILL MATERIAL.

SILT FENCE
SCALE: N.T.S.

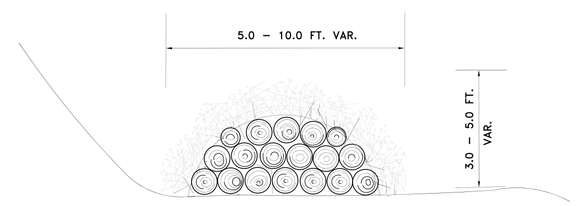

1- USE STAKES OR LOGS TO AVOID DISPLACEMENT OF BARRIER.

2- ENHANCE PERFORMANCE WITH A WRAPPING OF FILTER FABRIC.

BRUCH FILTER
SCALE: N.T.S.

ALL DIMENSIONS ARE SHOWN IN INCHES (IN.) UNLESS OTHERWISE NOTED.

1-DEFINITION: BALES OF HAY OR STRAW USED AS A MEANS OF CONTROLLING POLLUTION AND EROSION.

2-PURPOSE: TO OBSTRUCT THE FLOW OF WATER TO ALLOW DEPOSIT OF SEDIMENT AND/OR DIVERT WATER TO A SLOPE DRAIN, SEDIMENT BASIN,SEDIMENT TRAP, OR OTHER EROSION CONTROL STRUCTURE.

3-CONDITIONS WHERE APPLICABLE:
A-USE AT THE BOTTOM OF EMBANKMENT SLOPES TO DIVERT RUNOFF FROM SHEET FLOW AND ALSO CATCH SOME OF THE SEDIMENT PICKED UP IN THE SHEET FLOW.
B-AS CHECK DAMS IN SMALL DITCHES AND DRAINAGE AREAS.
C-ON THE LOWER SIDE OF CLEARED AREAS TO CATCH SEDIMENT FROM SHEET FLOW.
D-AS WATERPROOF CORES FOR STONE SEDIMENT DAMS.

4-DESIGN CRITERIA: NONE

5-CONSTRUCTION METHODS:
BALES OF HAY OR STRAW ARE UTILIZED TO CONTROL EROSION, TRAP SEDIMENT, AND DIVERT RUNOFF. THE BALES MUST BE BRACED FROM BEHIND WHEN CONDITIONS REQUIRE.

6-WEDGE LOOSE HAY OR STRAW BETWEEN BALES.

7-POINTS "A" MUST BE HIGHER THAN POINT"B".

8-ONLY 3 BALES ARE SHOWN FOR EACH CHECK DAM. MORE MAY BE REQUIRED, DEPENDING ON THE SPECIFIC APPLICATION.

STORM WATER POLLUTION PREVENTION PLAN GENERAL NOTES

A. PROHIBITION ON MOST NON-STORM WATER DISCHARGES

ONLY STORM WATER FROM THE PROJECT SITE SHALL BE ALLOWED TO FLOW INTO THE ON-SITE STORM DRAIN SYSTEM. CLEAN, NON-CHLORINATED WATER FROM THE FLUSHING OF FIRE HYDRANTS, WATER MAINS, AND STORM DRAINS MAY BE DISCHARGED TO THE STORM DRAIN IF IT IS NOT ALLOWED TO COLLECT DIRT, DEBRIS, AND TRASH WHILE FLOWING TO A STORM DRAIN INLET.

B. SOURCES OF STORM WATER POLLUTANTS

STORM WATER POLLUTANTS INCLUDE SOIL SEDIMENT AND NUTRIENTS, OIL, GREASE, TOXIC POLLUTANTS, AND HEAVY METALS. SOURCES OF STORM WATER POLLUTANTS INCLUDE BUT ARE NOT LIMITED TO SOIL EROSION BY WATER AND/OR WIND; CLEARING OF VEGETATION; GRADING; VEHICLE AND EQUIPMENT REFUELING AND MAINTENANCE; WASHING OF CONCRETE TRUCKS, MIXERS AND HANDLING EQUIPMENT; PAINTS, SOLVENTS AND ADHESIVES; AND LANDSCAPING WORK.

C. EROSION AND SEDIMENT CONTROLS

1- COVER EXPOSED STOCKPILES OF SOILS, CONSTRUCTION AND LANDSCAPING MATERIAL WITH HEAVY PLASTIC SHEETING.

2- IN LANDSCAPING AREAS WHERE THE VEGETATION HAS NOT ESTABLISHED GROWTH AND TAKEN HOLD, CONSTRUCT SANDBAG OR DIRT BERMS AROUND THEIR PERIMETER TO INSURE THAT WATER WILL BE CONTAINED INSIDE THE LANDSCAPING AREA AND THAT IT WILL NOT BE CONVEYED TO A STORM DRAIN INLET.

3- RE-VEGETATE AREAS WHERE LANDSCAPING HAS DIED OR NOT TAKEN HOLD.

4- DIVERT STORM WATER RUNOFF AROUND DISTURBED SOILS WITH BERMS OR DIRT SWALES.

D. OTHER CONTROLS

1- WASTE DISPOSAL

A. KEEP WASTE DISPOSAL CONTAINERS COVERED.
B. PROVIDE FOR THE WEEKLY (OR MORE FREQUENT, IF NECESSARY) DISPOSAL OF WASTE CONTAINERS.
C. PROVIDE CONTAINERS AT CONVENIENT LOCATIONS AROUND THE SITE.

2- SWEEPING OF SITE

A. PROVIDE WEEKLY SWEEPING BY HAND OR MECHANICAL MEANS TO KEEP THE PAVED AREA OF THE SITE FREE OF DUST, DIRT, AND DEBRIS.

B. DISPOSE OF ACCUMULATED DIRT IN WASTE CONTAINERS, OR HAUL IT OFF THE SITE TO A LANDFILL.

3- SANITARY/SEPTIC DISPOSAL

PORTABLE TOILETS AND OTHER SANITARY FACILITIES SHALL BE SERVICED WEEKLY AND PUMPED CLEAN BY A WASTE DISPOSAL COMPANY. NO TOXIC OR HAZARDOUS WASTE SHALL BE DISPOSED IN A PORTABLE TOILET OR IN THE ON-SITE SANITARY SEWER.

4- SPILLS

A. STORE ADEQUATE ABSORBENT MATERIALS, RAGS, BROOMS, SHOVELS, AND WASTE CONTAINERS ON THE SITE TO CLEAN-UP SPILLS OF MATERIALS SUCH AS FUEL, PAINT, SOLVENTS, OR CLEANERS. CLEAN UP MINOR SPILLS IMMEDIATELY.

B. FOR REPORTABLE QUANTITY OF HAZARDOUS OR TOXIC SUBSTANCE, SECURE THE SERVICES OF QUALIFIED PERSONNEL FOR CLEAN-UP AND DISPOSAL.

5- CONTROL OF ALLOWABLE NON-STORM WATER DISCHARGES

LANDSCAPING IRRIGATION, EROSION CONTROL MEASURES, PIPE FLUSHING AND TESTING, AND PAVEMENT WASHING ARE ALLOWED IF THEY CANNOT FEASIBLY BE ELIMINATED. COMPLY WITH THIS PLAN, DO NOT CAUSE OR CONTRIBUTE TO A VIOLATION OF WATER QUALITY STANDARDS, AND ARE NOT REQUIRED TO BE PERMITTED BY THE LOCAL REGIONAL WATER QUALITY CONTROL BOARD.

6- VEHICLES AND EQUIPMENT

A. FIX LEAKS OF FUEL, OIL AND OTHER SUBSTANCES IMMEDIATELY.

B. PERFORM REFUELING AND SERVICE OF VEHICLES OR EQUIPMENT OFF-SITE WHEN POSSIBLE. IF REFUELING OR SERVICE OF EQUIPMENT IS PERFORMED ON-SITE, THEN PROVIDE AN IMPERVIOUS, CONTAINED AREA WHERE ANY SPILLS CAN BE CONTAINED WITHOUT FLOWING TO A STORM WATER INLET OR INTO THE GROUND.

C. USE DRIP PANS TO CATCH LEAKS AND SMALL SPILLS.

STORM WATER POLLUTION PREVENTION PLAN SPECIFIC NOTES

1. THIS STORM WATER POLLUTION PREVENTION PLAN (SWPPP) WAS DEVELOPED AT THE REQUEST OF THE OWNER. WOP WOM LLC, FOR THE CONSTRUCTION OF A COMMERCIAL SITE CALLED EDEN CENTER. LOCATED IN EDEN CITY, COUNTY OF WEBER, STATE OF UTAH.

THIS PLAN IDENTIFIES POTENTIAL SOURCES OF POLLUTANTS OF STORM WATER, PRESENTS POLLUTION CONTROL MEASURES, AND ASSISTS IN INSURING IMPLEMENTATION AND MAINTENANCE OF THE BEST MANAGEMENT PRACTICES (BMP'S) INDICATED HEREIN.

2. A NOTICE OF INTENT HAS BEEN FILED WITH THE STATE OF UTAH WATER RESOURCES CONTROL BOARD BY THE OWNER SO THAT THIS CONSTRUCTION PROJECT MAY BE COVERED UNDER THE STATE GENERAL PERMIT. THE PERMIT IS NATIONAL POLLUTION DISCHARGE ELIMINATION SYSTEM (NPDES) GENERAL PERMIT NO._____ FOR STORM WATER DISCHARGES ASSOCIATED WITH CONSTRUCTION ACTIVITY.

3. IN THE EVENT OF A CHANGE OF OWNERSHIP, A NEW NOTICE OF INTENT SHALL BE FILED WITH THE STATE WATER RESOURCES CONTROL BOARD.

4. IN THE EVENT OF A RELEASE OF A REPORTABLE QUANTITY OF A POLLUTANT, THE CONTRACTOR SHALL ADVISE THE OWNER TO NOTIFY THE NATIONAL RESPONSE CENTER, WEBER COUNTY AND GARDNER ENGINEERING. IF NECESSARY, THIS POLLUTION PREVENTION PLAN SHOULD BE REVISED TO REFLECT THE CHANGE IN CONDITIONS OF THE CONSTRUCTION ACTIVITY. A REPORTABLE QUANTITY IS ESTABLISHED BY 40 CODE OF FEDERAL REGULATIONS (CFR) 117.3 OR 40 CFR 302.4.

5. ALL CONTRACTORS AND THEIR PERSONNEL WHOSE WORK CAN CONTRIBUTE TO OR CAUSE POLLUTION OF STORM WATER SHOULD BE MADE FAMILIAR WITH THIS POLLUTION PREVENTION PLAN. ADEQUATE TRAINING FOR IMPLEMENTATION OF THE MEASURES PRESENTED HEREIN SHALL BE PROVIDED TO THE CONTRACTORS AND THEIR PERSONNEL.

6. CHANGES IN CONSTRUCTION OR IN CONDITIONS WHICH ARE NOT COVERED BY THIS PLAN SHOULD BE BROUGHT TO THE ATTENTION OF THE OWNER AND GARDNER ENGINEERING. IF NECESSARY, THIS POLLUTION PREVENTION PLAN WILL BE REVISED TO REFLECT THE CHANGE IN CONSTRUCTION OR IN CONDITIONS.

7. ALL PREVENTION AND CLEAN UP MEASURES SHOULD BE CONDUCTED IN ACCORDANCE WITH OGDEN CITY ORDINANCES, AS WELL AS STATE AND FEDERAL REGULATIONS. WASTE MATERIALS SHOULD BE DISPOSED OF IN A LEGAL MANNER.

ALL DISCHARGERS OF STORM WATER MUST COMPLY WITH THE LAWFUL REQUIREMENTS OF WEBER COUNTY AND OTHER LOCAL AGENCIES REGARDING THE DISCHARGES OF STORM WATER TO STORM DRAINS.

8. THIS PLAN DOES NOT COVER THE REMOVAL OF HAZARDOUS OR TOXIC WASTE. IN THE EVENT OF A DISCHARGE OR RELEASE OF A REPORTABLE QUANTITY OF TOXIC WASTE, WORK SHOULD BE STOPPED UNTIL THE SPILL CAN BE ASSESSED AND A MITIGATION REPORT PREPARED BY A QUALIFIED ENVIRONMENTAL CONSULTANT, AND IF NECESSARY, REVIEWED BY WEBER COUNTY AND ANY OTHER AGENCY HAVING JURISDICTION.

9. THIS SWPPP SHALL BE MADE AVAILABLE TO THE PUBLIC UNDER SECTION 308(B) OF THE CLEAN WATER ACT. UPON REQUEST BY MEMBERS OF THE PUBLIC, THE DISCHARGER SHALL MAKE AVAILABLE FOR REVIEW A COPY OF THIS SWPPP EITHER TO THE REGIONAL WATER BOARD OR DIRECTLY TO THE REQUESTER.

THIS SWPPP MUST BE KEPT ON SITE DURING CONSTRUCTION ACTIVITY AND MADE AVAILABLE UPON REQUEST OF A REPRESENTATIVE OF THE REGIONAL WATER BOARD AND/OR THE LOCAL AGENCY.

10. CONTACTS

OWNER/DEVELOPER
WOP WOM LLC.
ERIC SMITH
212 MERCHANT ST, #330
HONOLULU, HI 96813
(808)524-3551

STATE OF UTAH
DEPARTMENT OF ENVIRONMENTAL QUALITY
DIVISION OF WATER QUALITY
299 NORTH 1460 WEST (801) 538-6146
P.O. BOX 144870
SALT LAKE CITY, UTAH 84114

U.S. EPA
ENVIRONMENTAL PROTECTION AGENCY
DENVER, COLORADO REGION VIII
800-759-4372

ENVIRONMENTAL PROTECTION AGENCY 202-475-9518
WASHINGTON, D.C. 20460

11. REFERENCES

A. IMPROVEMENT PLANS PER GARDNER ENGINEERING DATED DECEMBER 2011.
B. STORMWATER POLLUTION PREVENTION PLAN PREPARED BY GARDNER ENGINEERING DATED DECEMBER 2011.

12. THE PROPOSED CONSTRUCTION ACTIVITY IS THE COMMERCIAL PROJECT EDEN CENTER.

13. LOCATION OF THE SITE: EDEN CITY, WEBER COUNTY, UTAH

DEFINITIONS

1. "BEST MANAGEMENT PRACTICES" ("BMP'S") MEANS SCHEDULES OF ACTIVITIES, PROHIBITIONS OF PRACTICES, MAINTENANCE PROCEDURES, AND OTHER MANAGEMENT PRACTICES TO PREVENT OR REDUCE THE POLLUTION OF WATERS OF THE UNITED STATES. BMP'S ALSO INCLUDE TREATMENT REQUIREMENTS, OPERATING PROCEDURES, AND PRACTICES TO CONTROL SITE RUNOFF, SPILLAGE OR LEAKS, WASTE DISPOSAL, OR DRAINAGE FROM RAW MATERIAL STORAGE.

2. "CLEAN WATER ACT" ("CWA") MEANS THE FEDERAL WATER POLLUTION CONTROL ACT ENACTED BY PUBLIC LAW 92-500 AS AMENDED BY PUBLIC LAWS 95-217, 95-576, 96-483, AND 97-111; 33 USC 1251 ET SEQ.

3. "CONSTRUCTION SITE" IS THE LOCATION OF THE CONSTRUCTION ACTIVITY.

4. "NON-STORM WATER DISCHARGE" MEANS ANY DISCHARGE TO STORM DRAIN SYSTEMS THAT IS NOT COMPOSED ENTIRELY OF STORM WATER EXCEPT DISCHARGE PURSUANT TO AN NPDES PERMIT AND DISCHARGES RESULTING FROM FIRE FIGHTING ACTIVITIES.

5. "SIGNIFICANT MATERIAL" INCLUDES, BUT IS NOT LIMITED TO RAW MATERIALS; FUELS; MATERIALS SUCH AS SOLVENTS, DETERGENTS, AND PLASTIC PELLETS; FINISHED MATERIALS SUCH AS METALLIC PRODUCTS; RAW MATERIALS USED IN FOOD PROCESSING OR PRODUCTION HAZARDOUS SUBSTANCES DESIGNATED UNDER SECTION 101(14) OF THE COMPREHENSIVE ENVIRONMENTAL RESPONSE, COMPENSATION, AND LIABILITY ACT (CERLCA); ANY CHEMICAL THE FACILITY IS REQUIRED TO REPORT PURSUANT TO SECTION 313 OF TITLE III OF SUPERFUND AMENDMENTS AND REAUTHORIZATION ACT (SARA); FERTILIZERS; PESTICIDES; AND WASTE PRODUCTS SUCH AS ASHES, SLAG, AND SLUDGE THAT HAVE THE POTENTIAL TO BE RELEASED WITH STORM WATER DISCHARGES.

6. "SIGNIFICANT QUANTITIES" IS THE VOLUME, CONCENTRATIONS, OR MASS OF A POLLUTANT IN STORM WATER DISCHARGE THAT CAN CAUSE OR THREATEN TO CAUSE POLLUTION, CONTAMINATION, OR NUISANCE; ADVERSELY IMPACT HUMAN HEALTH OR THE ENVIRONMENT; AND CAUSE OR CONTRIBUTE TO A VIOLATION OF ANY APPLICABLE WATER QUALITY STANDARDS FOR THE RECEIVING WATER.

7. "STORM WATER" MEANS STORM WATER RUNOFF, SNOW MELT RUNOFF, SURFACE RUNOFF AND DRAINAGE, IT EXCLUDES INFILTRATION AND RUNOFF FROM AGRICULTURAL LAND.

8. "POLLUTION" MEANS THE "MAN-MADE OR MAN-INDUCED ALTERATION OF THE CHEMICAL, PHYSICAL, BIOLOGICAL, AND RADIOLOGICAL INTEGRITY OF WATER" [CLEAN WATER ACT SECTION 502(19)]. POLLUTION ALSO MEANS "AN ALTERATION OF THE QUALITY OF THE WATERS OF THE STATE BY WASTE TO A DEGREE WHICH UNREASONABLY AFFECTS EITHER… THE WATERS FOR BENEFICIAL USES… OR FACILITIES WHICH SERVE THESE BENEFICIAL USES." [CALIFORNIA WATER CODE SECTION 13050(1)].

9. "CONTAMINATION" MEANS "AN IMPAIRMENT OF THE QUALITY OF THE WATERS OF THE STATE BY WASTE TO A DEGREE WHICH CREATES A HAZARD TO THE PUBLIC HEALTH THROUGH POISONING OR THROUGH THE SPREAD OF DISEASE…INCLUDING ANY EQUIVALENT EFFECT RESULTING FROM THE DISPOSAL OF WASTE, WHETHER OR NOT WATERS OF THE STATE ARE AFFECTED."

10. "NUISANCE" MEANS "ANYTHING WHICH MEETS ALL OF THE FOLLOWING REQUIREMENTS: (1) IS INJURIOUS TO HEALTH, OR IS INDECENT OR OFFENSIVE TO THE SENSES, OR AN OBSTRUCTION TO THE FREE USE OF PROPERTY, SO AS TO INTERFERE WITH THE COMFORTABLE ENJOYMENT OF LIFE AND PROPERTY; (2) AFFECTS AT THE SAME TIME AN ENTIRE COMMUNITY OR NEIGHBORHOOD, OR ANY CONSIDERABLE NUMBER OF PERSONS, ALTHOUGH THE EXTENT OF THE ANNOYANCE OR DAMAGE INFLICTED UPON INDIVIDUALS MAY BE UNEQUAL; (3) OCCURS DURING OR AS A RESULT OF THE TREATMENT OR DISPOSAL OF WASTES."

11. "LOCAL AGENCY" MEANS ANY AGENCY THAT IS INVOLVED WITH REVIEW, APPROVAL, OR OVERSIGHT OF THE CONSTRUCTION SITES' (a) CONSTRUCTION ACTIVITY, (b) EROSION AND SEDIMENT CONTROLS, (c) STORM WATER DISCHARGE.

NOTICE:
EXISTING UTILITIES ARE SHOWN ON PLANS FOR THE CONVENIENCE OF THE CONTRACTOR ONLY. THE CONTRACTOR IS RESPONSIBLE FOR THE PROTECTION OF ALL UTILITIES. THE OWNER DOES NOT ASSUME RESPONSIBILITY FOR THE UTILITIES NOT SHOWN OR SHOWN INCORRECTLY.

AVOID CUTTING UNDERGROUND UTILITIES. IT'S COSTLY
Call BLUE STAKES BEFORE YOU Dig
1-800-662-4111
UNDERGROUND SERVICE (USA)

DEVELOPER
WOP WOM, LLC.
ERIC SMITH
212 MERCHANT ST. #330
HONOLULU, HI 96813
PHONE: (808) 524-3551
FAX: (808) 524-8803

NOTE: ALL CONSTRUCTION TO CONFORM TO WEBER COUNTY STANDARDS AND SPECIFICATIONS.

SCALE: 1" = 20'
DATE: DECEMBER 2011
DESIGN: TMN/SCC
DRAWN: SCC
CHECKED: TMN

REVISIONS

DATE	DESCRIPTION

DWG: SEE PLOT STAMP AT LEFT

REGISTERED PROFESSIONAL ENGINEER
No. 4859845
TYLER M. NIELSON
STATE OF UTAH

WOP WOM LLC
EDEN CENTER
STORM WATER POLLUTION PREVENTION PLAN
EDEN CITY, WEBER COUNTY, UTAH

Gardner Engineering
PLANNING
CIVIL ENGINEERING
LAND SURVEYING
ALTERNATIVE ENERGY
5875 South Adams Ave. Parkway, Suite 200 • Ogden, UT 84405
• Phone (801) 476 0202 • Fax (801) 476-0065

SW
2

R:\2312 - Wop Wom LLC\DESIGN\PRODUCTION DWG\LITTLE BEAR LOT 3.dwg, SWPPP-2, 12/28/2011 10:10:41 AM, schristensen, 1:1