WATTS ENTERPRISES
THE FAIRWAYS AT WOLF CREEK
P.R.U.D., PHASE 4 & 5
CONSTRUCTION DRAWINGS

PROJECT CONTACTS

OWNER
WATTS ENTERPRISES
5200 SOUTH HIGHLAND DRIVE, SUITE 101
SALT LAKE CITY, UT 84117
TEL: (801) 897-4880
CONTACT: RICK EVERSON
EMAIL: RICK@WATTSENTERPRISES.COM

ENGINEER/CONSULTANT
GALLOWAY & COMPANY, INC.
515 SOUTH 700 EAST, SUITE 3F
SALT LAKE CITY, UT 84102
TEL: (801) 953-1357
FAX: (303) 770-3636
CONTACT: JEREMY TOONE
EMAIL: JEREMYTOONE@GALLOWAYUS.COM

SURVEYOR
GALLOWAY & COMPANY, INC.
515 SOUTH 700 EAST, SUITE 3F
SALT LAKE CITY, UT 84102
TEL: (801) 953-1357
FAX: (303) 770-3636
CONTACT: NATE CHRISTENSEN
EMAIL: NATECHRISTENSEN@GALLOWAYUS.COM

GEOTECHNICAL ENGINEER
EARTHTEC ENGINEERING
1596 WEST 2650 SOUTH, SUITE 108
OGDEN, UT 84401
TEL: (801) 399-8516
FAX: (801) 399-9842
CONTACT: FRANK NAMDAR
EMAIL: FNAMDAR@EARTHTECENG.COM

UTILITY CONTACTS

WATER
WOLF CREEK WATER & SEWER IMPROVEMENT DISTRICT
3632 NORTH WOLF CREEK DRIVE
EDEN, UT 84310
TEL: (801) 745-3435
CONTACT: ROB THOMAS
EMAIL: RTHOMAS@WCWSID.COM

SECONDARY IRRIGATION
WOLF CREEK WATER & SEWER IMPROVEMENT DISTRICT
3632 NORTH WOLF CREEK DRIVE
EDEN, UT 84310
TEL: (801) 745-3435
CONTACT: ROB THOMAS
EMAIL: RTHOMAS@WCWSID.COM

SANITARY SEWER
WOLF CREEK WATER & SEWER IMPROVEMENT DISTRICT
3632 NORTH WOLF CREEK DRIVE
EDEN, UT 84310
TEL: (801) 745-3435
CONTACT: ROB THOMAS
EMAIL: RTHOMAS@WCWSID.COM

STORM SEWER
WEBER COUNTY
2380 WASHINGTON BLVD. SUITE 240
OGDEN, UT 84401
TEL: (801) 399-8374
CONTACT: BLAINE FRANDSEN
EMAIL: BFRANDSEN@CO.WEBER.UT.US

ELECTRIC
ROCKY MOUNTAIN POWER
1407 WEST NORTH TEMPLE
SALT LAKE CITY, UT 84116
TEL: (503) 813-6993
CONTACT: JOEL SIMMONS
EMAIL: GISDEPT@PACIFICORP.COM

GAS
QUESTAR GAS COMPANY
333 SOUTH STATE STREET
SALT LAKE CITY, UT 84145
TEL: - (801) 324-3970
CONTACT: MAPPING DEPT.
EMAIL: -

TELEPHONE
CENTURYLINK LOCAL NETWORK
-
TEL: (801) 974-8130
CONTACT: ARLENE DENNEY
EMAIL: ARLENE.DENNEY@CENTURYLINK.COM

FIRE
WEBER FIRE DISTRICT
2023 WEST 1300 NORTH
OGDEN, UT 84404
TEL: (801) 782-3580
CONTACT: -
EMAIL: -

JURISDICTIONAL CONSTRUCTION NOTES

ALL IRRIGATION PIPE AND FITTINGS ARE TO MEET WOLF CREEK WATER & SEWER IMPROVEMENT DISTRICT STANDARDS AND SPECIFICATIONS.

ALL IRRIGATION PIPING AND FITTINGS IS TO BE C-900 PVC AND MUELLER FITTINGS (TEES, HYDRANTS, VALVES, ETC. UNLESS APPROVED OTHERWISE BY THE ENGINEER.

ALL CULINARY WATER PIPE AND FITTINGS IS TO BE C-900 PVC AND MUELLER FITTINGS (TEES, HYDRANTS, VALVES, ETC. UNLESS APPROVED OTHERWISE BY THE ENGINEER.

ALL IRRIGATION LINES ARE REQUIRED TO MAINTAIN A MINIMUM OF 3' OF COVER TO FINISH GRADE.

ALL CULINARY LINES ARE REQUIRED TO MAINTAIN A MINIMIM OF 5' OF COVER TO FINISH GRADE.

REFERENCE WOLF CREEK WATER & SEWER IMPROVEMENT DISTRICT (WCWSID) STANDARDS AND SPECIFICATIONS FOR ALL WATER, SEWER, AND SECONDARY IRRIGATION IMPROVEMENTS.

REFERENCE THE LATEST EDITION OF THE APWA (AND ALL AMENDMENTS) FOR STORM DRAIN IMPROVEMENTS.

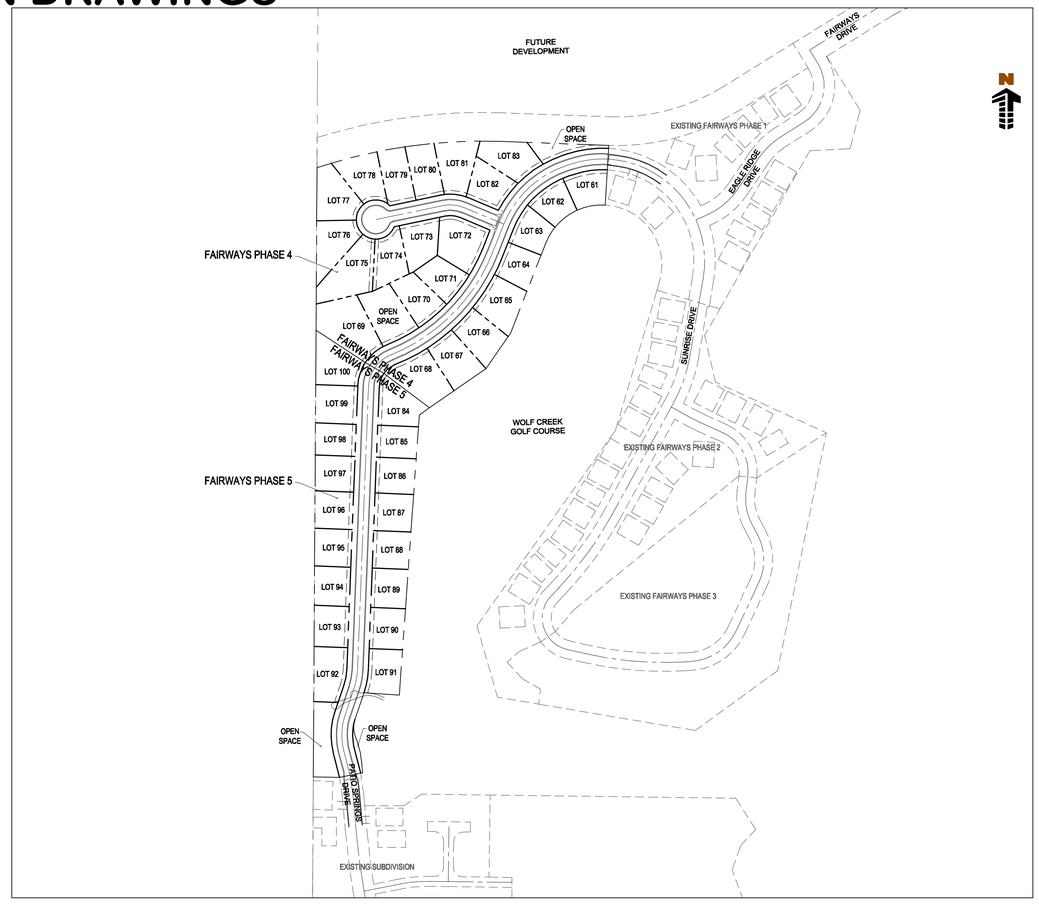

SITE MAP
SCALE: 1"=200'

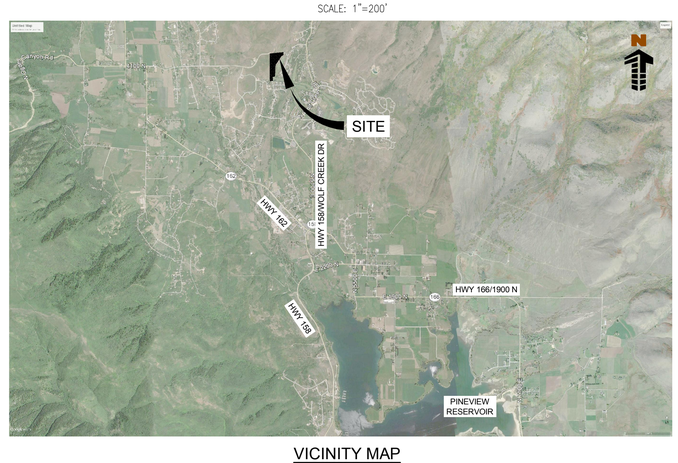

VICINITY MAP
NOT TO SCALE

SHEET INDEX

# of 27	SHEET NUMBER	SHEET TITLE
1	C0.0	COVER
		SUBDIVISION PLAT PHASE 4
		SUBDIVISION PLAT PHASE 5
2	SP01	SITE PLAN
3	UT01	UTILITY PLAN
4	UT02	UTILITY PLAN
5	GR01	GRADING PLAN
6	GR02	GRADING PLAN
7	PP01	PLAN & PROFILE
8	PP02	PLAN & PROFILE
9	PP03	PLAN & PROFILE
10	PP04	PLAN & PROFILE
11	PP05	PLAN & PROFILE
12	EC01	EROSION CONTROL PLAN
13	EC02	EROSION CONTROL PLAN
14	EC03	EROSION CONTROL DETAILS (APWA)
15	EC04	EROSION CONTROL DETAILS (APWA)
16	EC05	EROSION CONTROL DETAILS (APWA)
17	DT01	SANITARY SEWER DETAILS (APWA)
18	DT02	SANITARY SEWER DETAILS (APWA)
19	DT03	WATER DETAILS (WCWSID)
20	DT04	STORM DRAIN DETAILS (APWA)
21	DT05	STORM DRAIN DETAILS (APWA)
22	DT06	STORM DRAIN DETAILS (APWA)
23	DT07	STORM DRAIN DETAILS
24	DT08	STORM DRAIN DETAILS
25	DT09	STORM DRAIN DETAILS
26	DT10	APWA DETAILS
27	DT11	SITE DETAILS
28	DT12	STREET LIGHT DETAILS
29	DT13	MONUMENT DETAILS

GENERAL NOTES:

1. THE SITEWORK SHALL MEET OR EXCEED THE LATEST APWA STANDARD SITE SPECIFICATIONS.
2. CONTRACTOR IS RESPONSIBLE FOR ALL NECESSARY INSPECTIONS AND/OR CERTIFICATIONS REQUIRED BY CODES AND/OR UTILITY SERVICE COMPANIES. THIS AND THE FINAL CONNECTIONS OF SERVICES SHALL BE COMPLETED 30 DAYS PRIOR TO STORE POSSESSION.
3. QUESTAR GAS FIELD ENGINEER TO DETERMINE THE FINAL LOCATION FOR ALL GAS LINES.
4. ROCKY MOUNTAIN POWER FIELD ENGINEER TO DETERMINE THE FINAL LOCATION OF ELECTRIC LINES.
5. ENTIRE INSTALLATION SHALL MEET ALL APPLICABLE CODES.
6. VERIFY ALL DIMENSIONS AND CONDITIONS ON SITE.
7. SET PROPERTY CORNER PINS IN CONCRETE. IF PROPERTY CORNERS ARE DESTROYED BY CONTRACTOR, THE CONTRACTOR SHALL BEAR THE EXPENSE OF RELOCATING CORNERS BY A REGISTERED SURVEYOR.
8. GENERAL CONTRACTOR TO PERFORM GENERAL YARD AND BUILDING CLEAN-UP AT COMPLETION OF WORK.
9. THE CONTRACTOR SHALL BE RESPONSIBLE FOR RECORDING AS-BUILT INFORMATION ON A SET OF RECORD DRAWINGS KEPT ON THE CONSTRUCTION SITE, AND AVAILABLE TO THE CITY, ITS AGENTS, OWNER OR ENGINEER AT ALL TIMES. DIMENSIONS SHALL BE ANNOTATED ON AS-BUILT RECORD DRAWINGS. AS-BUILT DRAWINGS ARE REQUIRED PRIOR TO ISSUANCE OF FINAL PAYMENT. AS BUILT DRAWINGS WILL BE SUPPLIED TO OWNER AND CITY/TOWN PRIOR TO FINAL PAYMENT.
10. CONTRACTOR RESPONSIBLE FOR ALL WORK NECESSARY FOR FINAL ACCEPTANCE OF WORK FROM CITY, UTILITY DISTRICTS OR ANY OTHER GOVERNING AGENCY, INCLUDING BUT NOT LIMITED TO AS-BUILT DRAWINGS, INSPECTIONS, TESTING REPORTS AND CERTIFICATIONS.
11. THE GENERAL CONTRACTOR'S SURVEYOR SHALL VERIFY ALL HORIZONTAL CONTROL DIMENSIONING PRIOR TO CONSTRUCTION STAKING. SURVEYOR MUST VERIFY ALL BENCHMARK, BASIS OF BEARING AND DATUM INFORMATION TO ENSURE IMPROVEMENTS WILL BE AT THE SAME HORIZONTAL AND VERTICAL LOCATIONS SHOWN ON THE DESIGN CONSTRUCTION DRAWINGS. PRIOR TO CONSTRUCTION STAKING ANY DISCREPANCY MUST BE REPORTED TO OWNER AND ENGINEER PRIOR TO CONTINUATION OF ANY FURTHER STAKING OR CONSTRUCTION WORK.
12. CONTRACTOR TO PROVIDE ALL EQUIPMENT AND PERSONNEL REQUIRED FOR FINAL APPROVAL OF ALL FACILITIES BY OWNER'S REPRESENTATIVE.
13. NO WORK IS TO BEGIN UNTIL ALL PERMITS HAVE BEEN OBTAINED.
14. FINAL GRADES ARE SUBJECT TO MINOR CHANGE BY OWNER REPRESENTATIVE. NO GRADE CHANGES IN EXCESS OF 0.05' WITHOUT OWNER APPROVAL.
15. ALL SPOT GRADES SHOWN ARE TO FLOWLINE UNLESS OTHERWISE NOTED.
16. GENERAL CONTRACTOR SHALL BE RESPONSIBLE FOR MINIMIZING DEPOSITION OF ONSITE SEDIMENTS ONTO SURROUNDING PUBLIC STREETS DURING CONSTRUCTION. REFER TO EROSION CONTROL PLANS AND DETAILS FOR INFORMATION.
17. GENERAL CONTRACTOR TO PROVIDE BARRICADE PROTECTION WITH FLASHING LIGHTS AROUND ALL FOOTINGS, EXCAVATIONS AND ALL OFFSITE WORK.
18. PROPOSED FLOWLINE ELEVATIONS DO NOT TAKE INTO ACCOUNT GUTTER DEPRESSIONS AT INLETS.
19. ALL FILL MATERIAL IS TO BE IN PLACE, AND COMPACTED BEFORE INSTALLATION OF PROPOSED UTILITIES.
20. CONTRACTOR SHALL NOTIFY THE UTILITY AUTHORITIES INSPECTORS 72 HOURS BEFORE CONNECTING TO ANY EXISTING LINE OR AS REQUIRED BY UTILITY PROVIDER.
21. SANITARY SEWER PIPE SHALL BE AS INDICATED ON THE UTILITY PLANS.
22. WATER LINES SHALL BE AS INDICATED ON THE UTILITY PLANS.
23. MINIMUM TRENCH WIDTH SHALL BE IN ACCORDANCE WITH THE GOVERNING AGENCIES CONSTRUCTION & DEVELOPMENT STANDARDS.
24. ALL WATER JOINTS ARE TO BE IN ACCORDANCE WITH WCWSID POLICY CONSTRUCTION & DEVELOPMENT STANDARDS.
25. ALL WATER AND SEWER UTILITIES SHOULD BE KEPT TEN (10') APART (PARALLEL) MIN. OR WHEN CROSSING 18" VERTICAL CLEARANCE MIN. (OUTSIDE EDGE OF PIPE TO OUTSIDE EDGE OF PIPE) UNLESS OTHERWISE INDICATED ON THE PLANS AND CONSISTENT WITH WCWSID CONSTRUCTION & DEVELOPMENT STANDARDS.
26. CONTRACTOR SHALL MAINTAIN A MINIMUM OF 5'-0" COVER ON ALL WATERLINES IN ACCORDANCE WITH WCWSID CONSTRUCTION & DEVELOPMENT STANDARDS.
27. LINES UNDERGROUND SHALL BE INSTALLED, INSPECTED AND APPROVED BEFORE BACKFILLING.
28. TOPS OF EXISTING MANHOLES SHALL BE RAISED AS NECESSARY TO BE FLUSH WITH PROPOSED PAVEMENT ELEVATIONS, AND TO BE ONE FOOT ABOVE FINISHED GROUND ELEVATIONS IN UNPAVED AREAS. ALL MANHOLES SHALL HAVE WATER TIGHT LIDS.
29. EXISTING UTILITIES SHALL BE VERIFIED IN FIELD PRIOR TO INSTALLATION OF ANY NEW LINES.
30. CONTRACTOR IS RESPONSIBLE FOR COMPLYING TO THE SPECIFICATIONS OF WCWSID DISTRICT WITH REGARD TO MATERIALS AND INSTALLATION OF THE WATER AND SEWER LINES.
31. CONTRACTOR IS RESPONSIBLE FOR ALL NECESSARY INSPECTIONS AND/OR CERTIFICATIONS REQUIRED BY CODES AND/OR UTILITY SERVICE COMPANIES.
32. CONTRACTOR SHALL COORDINATE WITH ALL UTILITY COMPANIES FOR INSTALLATION REQUIREMENTS AND SPECIFICATIONS.

BENCHMARK
BENCHMARK: THE SITE BENCHMARK IS THE CENTER OF SECTION 22, TOWNSHIP 7 NORTH, RANGE 1 EAST, SALT LAKE BASE AND MERIDIAN. FOUND 3" WEBER COUNTY BRASS CAP.
ELEVATION =5324.20'

NOTE: CONTRACTOR RESPONSIBLE FOR AS-BUILT DRAWINGS, TESTS, REPORTS AND/OR ANY OTHER CERTIFICATES OR INFORMATION AS REQUIRED FOR ACCEPTANCE OF WORK FROM CITY, UTILITY DISTRICTS OR ANY OTHER GOVERNING AGENCY.

NOTE: CONTRACTOR SHALL PROTECT ALL EXISTING SURVEY MONUMENTATION. CONTRACTOR SHALL HAVE LICENSED SURVEYOR REPLACE ANY DAMAGED OR DISTURBED MONUMENTATION AT THEIR COST.

BASIS OF BEARING
THE NORTH LINE OF THE SOUTHWEST QUARTER OF SECTION 22, T.7N., R.1E., SALT LAKE BASE AND MERIDIAN, MONUMENTED ON THE WEST BY A 3" BRASS CAP, STAMPED WEBER COUNTY, AND ON THE EAST BY A 3" BRASS CAP, STAMPED WEBER COUNTY, AND IS CONSIDERED TO BEAR S89°14'39"E.

CAUTION - NOTICE TO CONTRACTOR
1. ALL UTILITY LOCATIONS SHOWN ARE BASED ON MAPS PROVIDED BY THE APPROPRIATE UTILITY COMPANY AND FIELD SURFACE EVIDENCE AT THE TIME OF SURVEY AND IS TO BE CONSIDERED AN APPROXIMATE LOCATION ONLY. IT IS THE CONTRACTOR'S RESPONSIBILITY TO FIELD VERIFY THE FIELD LOCATION OF ALL UTILITIES, PUBLIC OR PRIVATE, WHETHER SHOWN ON THE PLANS OR NOT, PRIOR TO CONSTRUCTION. REPORT ANY DISCREPANCIES TO THE ENGINEER PRIOR TO CONSTRUCTION.
2. WHERE A PROPOSED UTILITY CROSSES AN EXISTING UTILITY, IT IS THE CONTRACTOR'S RESPONSIBILITY TO FIELD VERIFY THE HORIZONTAL AND VERTICAL LOCATION OF SUCH EXISTING UTILITY, EITHER THROUGH POTHOLING OR ALTERNATIVE METHOD. REPORT INFORMATION TO THE ENGINEER PRIOR TO CONSTRUCTION.

811 Know what's below. Call before you dig.

Galloway
Planning. Architecture. Engineering.
Trolley Corners Building
515 South 700 East, Suite 3F
Salt Lake City, UT 84102
303.770.8884 O
www.gallowayUS.com

©2015. Galloway & Company, Inc. All Rights Reserved

Watts ENTERPRISES

LICENSED PROFESSIONAL ENGINEER No. 275600 Richard M. Piggott 1-13-17 STATE OF UTAH

THESE PLANS ARE AN INSTRUMENT OF SERVICE AND ARE THE PROPERTY OF GALLOWAY, AND MAY NOT BE DUPLICATED, DISCLOSED, OR REPRODUCED WITHOUT THE WRITTEN CONSENT OF GALLOWAY. COPYRIGHTS AND INFRINGEMENTS WILL BE ENFORCED AND PROSECUTED.

WATTS ENTERPRISES
FAIRWAYS AT WOLF CREEK
PHASE 4 & 5

EDEN, UTAH 84310

#	Date	Issue / Description	Init.

Project No:	WAT01.01
Drawn By:	JST
Checked By:	RMP
Date:	1/12/2017

COVER

C0.0

Sheet 1 of 29

THE FAIRWAYS AT WOLF CREEK P.R.U.D., PHASE 4

A PORTION OF THE NORTHWEST QUARTER OF SECTION 22, TOWNSHIP 7 NORTH, RANGE 1 EAST, SALT LAKE BASE & MERIDIAN
EDEN, COUNTY OF WEBER, STATE OFUTAH
NOVEMBER 2016

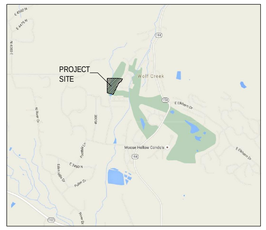

VICINITY MAP
NOT TO SCALE

SURVEYOR'S CERTIFICATE

I, LYLE BISSEGGER, DO HEREBY CERTIFY THAT I AM A REGISTERED LAND SURVEYOR IN THE STATE OF UTAH, AND THAT I HOLD CERTIFICATE NO. 376082 IN ACCORDANCE WITH TITLE 58, CHAPTER 22, OF THE PROFESSIONAL ENGINEERS AND LAND SURVEYING LICENSING ACT. I ALSO CERTIFY THAT I HAVE COMPLETED A SURVEY F THE PROPERTY DESCRIBED HEREON IN ACCORDANCE WITH SECTION 17-23-17 AND THAT I HAVE VERIFIED ALL MEASUREMENTS SHOWN HEREON THIS PLAT OF TRAPPERS RIDE AT WOLF CREEK,P.R.U.D. PHASE 8 IN WEBER COUNTY, UTAH AND THAT IT HAS BEEN CORRECTLY DRAWN TO THE DESIGNATED SCALE AND IS A TRUE AND CORRECT REPRESENTATION OF THE FOLLOWING DESCRIPTION OF LANDS INCLUDED IN SAID SUBDIVISION, BASED ON DATA COMPILED FROM RECORDS IN THE WEBER COUNTY RECORDERS OFFICE, AND ALL LOTS MEET THE REQUIREMENTS OF WEBER COUNTY LAND USE COD WCO 106-1-8(C)(1). MONUMENTS HAVE BEEN FOUND OR PLACED AS REPRESENTED ON THIS PLAT

SIGNATURE: _____

REGISTRATION NO.: 376082

LEGAL DESCRIPTION

A PARCEL OF LAND SITUATED IN THE NORTHWEST QUARTER OF SECTION 22, T.7N., R.1E. OF THE SALT LAKE BASE AND MERIDIAN, EDEN, WEBER COUNTY, STATE OF UTAH, AND BEING MORE PARTICULARLY DESCRIBED AS FOLLOWS:

BASIS OF BEARING:

THE WEST LINE OF THE NORTHWEST QUARTER OF SECTION 22, T.7N., R.1E. OF THE SALT LAKE BASE AND MERIDIAN, MONUMENTED ON THE SOUTH BY A 3" BRASS CAP, STAMPED WEBER COUNTY, AND ON THE NORTH BY A 3" BRASS CAP, STAMPED WEBER COUNTY, AND IS CONSIDERED TO BEAR N00°20'47"E.

COMMENCING AT THE WEST QUARTER CORNER OF SAID SECTION 22, THENCE N00°20'47"E ALONG THE WEST LINE OF SAID SECTION A DISTANCE OF 1648.70 FEET TO THE POINT OF BEGINNING:

THENCE N00°20'47"E ALONG THE WEST LINE OF SAID SECTION A DISTANCE OF 454.48 FEET TO A NON-TANGENT CURVE:

THENCE ALONG SAID CURVE TO THE RIGHT WHOSE CENTER BEARS S18°20'59"E, HAVING A RADIUS OF 1460.00 FEET, A CENTRAL ANGLE OF 20°26'23" AND A LENGTH OF 520.84 FEET;

THENCE S87°54'37"E, A DISTANCE OF 302.48 FEET TO A POINT ON THE WEST LINE OF THE FAIRWAYS AT WOLF CREEK PRUD PHASE 1, AMENDED ;

THENCE S03°20'53"W, A DISTANCE OF 166.90 FEET ALONG THE WEST LINE OF SAID FAIRWAYS AT WOLF CREEK TO A NON-TANGENT CURVE;

THENCE ALONG SAID CURVE TO THE LEFT WHOSE CENTER BEARS S03°20'56"W, HAVING A RADIUS OF 168.00 FEET, A CENTRAL ANGLE OF 71°59'54" AND A LENGTH OF 211.11 FEET;

THENCE S21°21'04"W, A DISTANCE OF 269.33 FEET;

THENCE S34°43'01"W, A DISTANCE OF 121.50 FEET;

THENCE S55°14'14"W, A DISTANCE OF 191.85 FEET;

THENCE N53°09'24"W, A DISTANCE OF 159.59 FEET;

THENCE N59°08'40"W, A DISTANCE OF 60.09 FEET;

THENCE N56°49'08"W, A DISTANCE OF 164.53 FEET TO THE POINT OF BEGINNING;

CONTAINING 411,555SQUARE FEET, OR 9.45 ACRES MORE OR LESS.

OWNERS DEDICATION

WE, THE UNDERSIGNED OWNERS OF THE HEREON DESCRIBED TRACT OF LAND, HEREBY SET APART AND SUBDIVIDE THE SAME INTO LOTS AND STREETS AS SHOWN ON THIS PLAT AND NAME SAID TRACT:

THE FAIRWAYS AT WOLF CREEK P.R.U.D., PHASE 4

AND DO HEREBY DEDICATE, GRANT AND CONVEY TO WEBER COUNTY, UTAH ALL THOSE PARTS OR PORTIONS OF SAID TRACT OF LAND DESIGNATED AS STREETS THE SAME TO BE USED AS PUBLIC THOROUGHFARES FOREVER .

AND HEREBY GRANT AND DEDICATE A PERPETUAL RIGHT AND EASEMENT OVER, UPON AND UNDER THE LANDS DESIGNATED ON THE PLAT AS PUBLIC UTILITY , STORM WATER DETENTION PONDS, DRAINAGE AND CANAL MAINTENANCE EASEMENTS, THE SAME TO BE USED FOR THE INSTALLATION, MAINTENANCE, AND OPERATION OF PUBLIC UTILITY SERVICE LINES, STORM DRAINAGE FACILITIES IRRIGATION CANALS OR FOR THE PERPETUAL PRESERVATION OF WATER DRAINAGE CHANNELS IN THEIR NATURAL STATE WHICHEVER IS APPLICABLE AS MAY AUTHORIZED BY WEBER COUNTY, UTAH, WITH NO BUILDINGS OR STRUCTURES BEING ERECTED WITHIN SUCH EASEMENTS AND DO HEREBY GRANT AND CONVEY TO THE PRUD UNIT OWNERS ASSOCIATION, ALL THOSE PARTS OR PORTIONS OF SAID TRACT OF LAND DESIGNATED AS COMMON AREAS TO BE USED FOR RECREATIONAL AND OPEN SPACE PURPOSES FOR THE BENEFIT OF EACH UNIT OWNER ASSOCIATION MEMBER IN COMMON WITH ALL OTHERS IN THE SUBDIVISION AND GRANT AND DEDICATE TO WEBER COUNTY A PERPETUAL OPEN SPACE RIGHT AND EASEMENT ON AND OVER THE COMMON AREAS TO GUARANTEE TO WEBER COUNTY THAT THE COMMON AREAS REMAIN OPEN AND UNDEVELOPED EXCEPT FOR APPROVED RECREATIONAL, PARKING AND OPEN SPACE PURPOSES. THE FOREGOING SHALL NOT CONSTITUTE A DEDICATION OF THE COMMON AREA PARCELS FOR PUBLIC USE, SUCH PARCELS BEING RESTRICTED TO USE BY THE ASSOCIATION MEMBERS AND THEIR GUESTS AND OTHERS AS SET FORTH IN THE NEIGHBORHOOD DECLARATION AND THE MASTER DECLARATION. DECLARANT DOES ALSO HEREBY GRANT AND DEDICATE A PERPETUAL EASEMENT OVER, UPON, AND UNDER THE LANDS DESIGNATED AS COMMON AREA PARCELS HEREON AS A PUBLIC UTILITY EASEMENT, THE SAME TO BE USED FOR INSTALLATION, MAINTENANCE, AND OPERATION OF PUBLIC UTILITY SERVICE LINES, AS NECESSARY.

SIGNED THIS THE_____ DAY OF_____ , 20__

_____
THE FAIRWAYS AT WOLF CREEK LLC
RUSS WATTS, MANAGING MEMBER

ACKNOWLEDGMENT

STATE OF UTAH)
) SS
COUNTY OF WEBER)

ON THIS DAY OF , 20__

ON THE_____ DAY OF_____, 20__ PERSONALLY APPEARED BEFORE ME RUSS WATTS, WHO BEING BY ME DULY SWORN DID SAY THAT HE IS A MANAGING MEMBER OF THE FAIRWAYS AT WOLF CREEK, L.L.C. AND THAT SAID INSTRUMENT WAS SIGNED IN BEHALF OF SAID L.L.C. BY A RESOLUTION OF ITS MEMBERS AND RUSS WATTS ACKNOWLEDGED TO ME THAT SAID L.L.C. EXECUTED THE SAME.

_____
NOTARY PUBLIC

PLAT NOTES

1. UNLESS OTHERWISE DIMENSIONED ON THIS PLAT, SETBACKS FOR THIS SUBDIVISION ARE AS FOLLOWS: FRONT= 20 FEET, REAR= 20 FEET, SIDE= 9 FEET, SIDE FACING STREET ON CORNER LOT= 20 FEET
2. THIS PLAT IS SUBJECT TO THAT CERTAIN AMENDED AND RESTATED DECLARATION OF COVENANTS, CONDITIONS, AND RESTRICTIONS OF THE FAIRWAYS AT WOLF CREEK PRUD ("NEIGHBORHOOD DECLARATION") EXECUTED BY FAIRWAYS AT WOLF CREEK, LLC ("DECLARANT") AS WELL AS THAT CERTAIN MASTER DECLARATION OF COVENANTS, CONDITIONS, AND RESTRICTIONS FOR WOLF CREEK RESORT ("MASTER DECLARATION") EXECUTED BY WOLF CREEK PROPERTIES, LC ("MASTER DEVELOPER"). BOTH NEIGHBORHOOD DECLARATION AND MASTER DECLARATION HAVE BEEN RECORDED IN THE OFFICE OF THE WEBER COUNTY RECORDER WHICH SHALL SET FORTH THE RESTRICTIONS AND GENERAL PLAN OF IMPROVEMENT FOR THE PROPERTY DESCRIBED IN THIS PLAT. CERTAIN TERMS NOT OTHERWISE DEFINED IN THIS PLAT SHALL HAVE THE MEANINGS SET FORTH IN THE NEIGHBORHOOD DECLARATION OR MASTER DECLARATION.
3. PURSUANT TO THE NEIGHBORHOOD DECLARATION, THE FAIRWAYS AT WOLF CREEK OWNERS ASSOCIATION, INC., A UTAH NONPROFIT CORPORATION ("COMMUNITY ASSOCIATION") IS RESPONSIBLE FOR MAINTAINING ALL COMMUNITY AREAS, IF ANY, AND SHALL HAVE A PERPETUAL NON-EXCLUSIVE EASEMENT OVER ALL PARCELS FOR SUCH MAINTENANCE PURPOSES AS FURTHER DESCRIBED IN THE NEIGHBORHOOD DECLARATION.
4. AS FURTHER DESCRIBED IN THE NEIGHBORHOOD DECLARATION, ALL LOTS, AND ALL RESIDENCES AND IMPROVEMENTS CONSTRUCTED THEREON, SHALL COMPLY WITH THE ARCHITECTURAL CONTROL COMMITTEE ("COMMITTEE"). NO CONSTRUCTION, INSTALLATION, OR OTHER WORK WHICH IN ANY WAY ALTERS THE APPEARANCE OF ANY PROPERTY OR LOT WITHIN THE PROJECT, OR ANY RESIDENCES OR IMPROVEMENTS LOCATED THEREON, SHALL BE MADE OR DONE WITHOUT COMPLIANCE WITH THE COMMITTEE AS DESCRIBED IN THE NEIGHBORHOOD DECLARATION.
5. AS FURTHER DESCRIBED IN THE MASTER DECLARATION, ALL LOTS, AND ALL RESIDENCES AND IMPROVEMENTS CONSTRUCTED THEREON, SHALL COMPLY WITH THE DESIGN REVIEW BOARD ("BOARD"). NO CONSTRUCTION, INSTALLATION, OR OTHER WORK WHICH IN ANY WAY ALTERS THE APPEARANCE OF ANY PROPERTY OR LOT WITHIN THE PROJECT, OR ANY RESIDENCES OR IMPROVEMENTS LOCATED THEREON, SHALL BE MADE OR DONE WITHOUT COMPLIANCE WITH THE BOARD AS DESCRIBED IN THE MASTER DECLARATION.
6. THE NEIGHBORHOOD DECLARATION SETS FORTH THE TERMS AND RESTRICTIONS FOR NIGHTLY RENTALS AND LEASING OF LOTS WITHIN THE PROJECT.

NARRATIVE

THIS SURVEY AND SUBSEQUENT SUBDIVISION PLAT WERE COMPLETED AT THE REQUEST OF THE "EDEN VILLAGE LLC" FRO THE PURPOSE OF SUBDIVIDING THEIR PROPERTY TO CREATE RESIDENTIAL LOTS.

BASIS OF BEARING:
THE WEST LINE OF THE NORTHWEST QUARTER OF SECTION 22, T.7N., R.1E. OF THE SALT LAKE BASE AND MERIDIAN, MONUMENTED ON THE SOUTH BY A 3" BRASS CAP, STAMPED WEBER COUNTY, AND ON THE NORTH BY A 3" BRASS CAP, STAMPED WEBER COUNTY, AND IS CONSIDERED TO BEAR N00°20'47"E.

CURVE TABLE

CURVE	RADIUS	LENGTH	DELTA	BEARING	CHORD
C1	285.00	106.99	021°30'30"	N82°14'55"E	106.36
C2	285.00	249.42	050°08'36"	N46°25'22"E	241.54
C3	510.00	416.50	046°47'29"	N44°44'48"E	405.02
C4	100.00	59.80	034°15'47"	N51°00'39"E	58.91
C5	100.00	60.01	034°22'55"	S84°31'55"E	59.11
C6	285.00	246.14	049°28'58"	S46°45'11"W	238.56
C7	285.00	3.29	000°39'38"	S21°40'53"W	3.29
C8	254.52	95.55	021°30'30"	N82°13'42"E	94.99
C9	255.00	19.70	004°25'35"	N69°16'53"E	19.70
C10	255.00	124.85	028°03'07"	N53°02'32"E	123.60
C11	255.00	78.62	017°39'55"	N30°11'01"E	78.31
C12	540.00	57.75	006°07'40"	N24°24'54"E	57.73
C13	540.00	110.86	011°45'45"	N33°21'37"E	110.66
C14	540.00	86.01	009°07'32"	N43°48'15"E	85.92
C15	540.00	85.71	009°05'38"	N52°54'50"E	85.62
C16	540.00	100.67	010°40'54"	N62°48'06"E	100.53
C17	70.00	40.27	032°57'54"	N51°39'36"E	39.72
C18	130.00	67.45	029°43'35"	N48°02'39"E	66.69
C19	130.00	11.88	005°14'06"	N65°31'30"E	11.87
C20	480.00	101.53	012°07'11"	N62°04'57"E	101.34
C21	480.00	101.86	012°09'33"	N49°56'35"E	101.67
C22	480.00	104.03	012°25'05"	N37°39'17"E	103.83
C23	480.00	84.57	010°05'40"	N26°23'54"E	84.46
C24	70.00	42.01	034°22'55"	N84°31'55"W	41.38
C25	55.00	7.88	008°12'50"	S48°53'08"E	7.88
C26	55.00	68.65	071°30'41"	S57°05'19"W	64.28
C27	55.00	37.06	038°36'36"	N67°51'02"W	36.37
C28	55.00	45.33	047°13'25"	N24°56'02"W	44.06
C29	55.00	50.79	052°54'38"	N25°08'00"E	49.00
C30	55.00	72.40	075°25'08"	N89°17'53"E	67.28
C31	130.00	10.01	004°24'42"	N80°28'59"E	10.01
C32	130.00	61.23	026°59'14"	S83°49'03"E	60.67
C33	130.00	6.77	002°58'59"	S68°49'57"E	6.77
C34	315.00	93.52	017°00'36"	N36°02'27"E	93.17
C35	315.00	88.77	016°08'46"	N52°37'08"E	88.47
C36	315.00	59.39	010°48'09"	N66°05'36"E	59.30
C37	315.00	118.43	021°32'28"	N82°15'54"E	117.73
C38	1460.00	57.52	002°15'26"	N89°02'20"W	57.52
C39	1460.00	129.05	005°03'53"	S87°18'01"W	129.01
C40	1460.00	81.42	003°11'43"	S83°10'13"W	81.41
C41	1460.00	79.27	003°06'40"	S80°01'02"W	79.26
C42	1460.00	131.80	005°10'20"	S75°52'32"W	131.75
C43	1460.00	41.77	001°38'22"	S72°28'11"W	41.77
C44	168.00	80.73	027°32'00"	S79°34'56"W	79.96
C45	168.00	78.69	026°50'08"	S52°23'52"W	77.97
C46	168.00	51.69	017°37'45"	S30°09'55"W	51.49

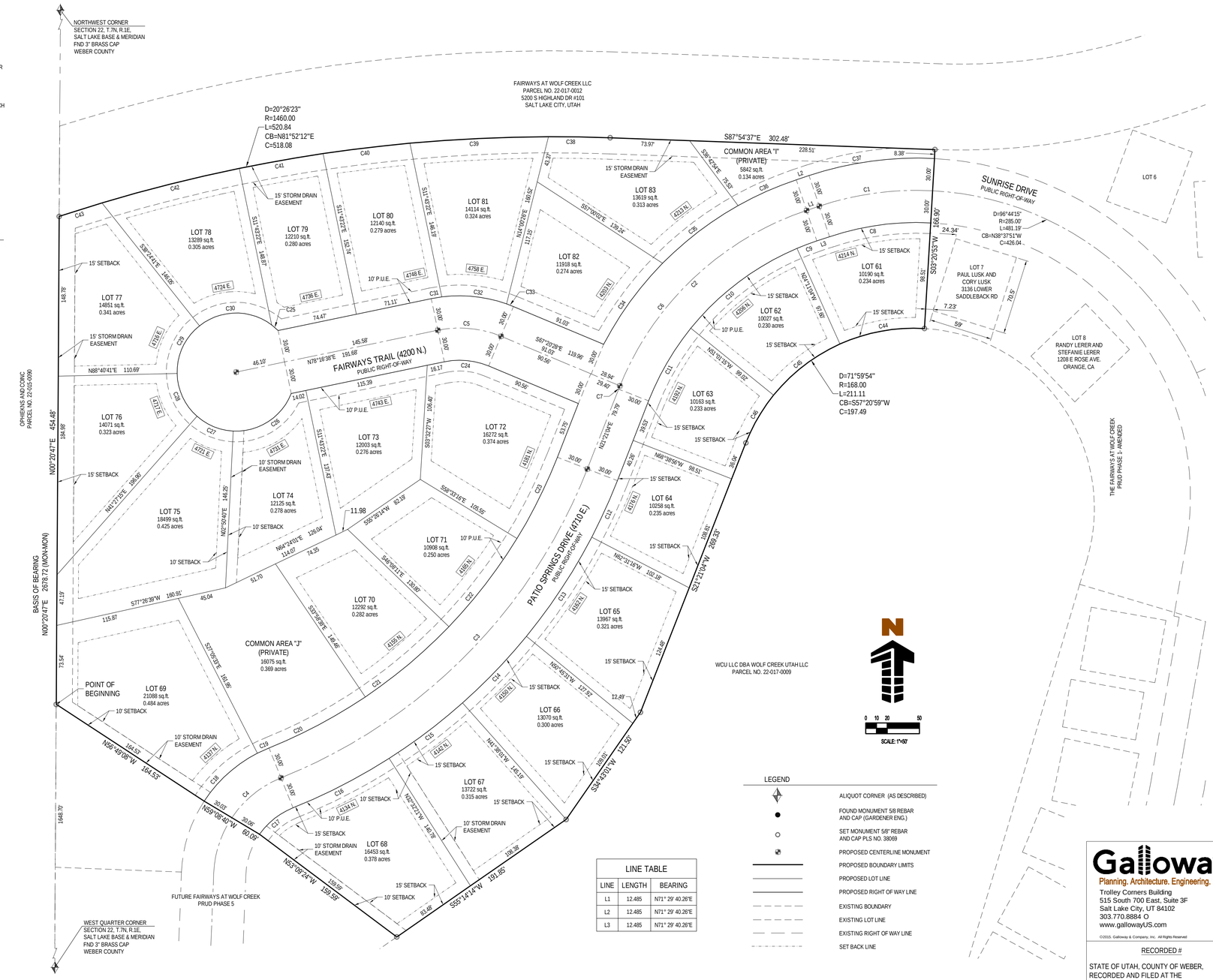

LINE TABLE

LINE	LENGTH	BEARING
L1	12.485	N71° 29' 40.26"E
L2	12.485	N71° 29' 40.26"E
L3	12.485	N71° 29' 40.26"E

LEGEND

- ALIQUOT CORNER (AS DESCRIBED)
- FOUND MONUMENT 5/8 REBAR AND CAP (GARDENER ENG.)
- SET MONUMENT 5/8" REBAR AND CAP PLS NO. 38069
- PROPOSED CENTERLINE MONUMENT
- PROPOSED BOUNDARY LIMITS
- PROPOSED LOT LINE
- PROPOSED RIGHT OF WAY LINE
- EXISTING BOUNDARY
- EXISTING LOT LINE
- EXISTING RIGHT OF WAY LINE
- SET BACK LINE

Galloway
Planning. Architecture. Engineering.
Trolley Corners Building
515 South 700 East, Suite 3F
Salt Lake City, UT 84102
303.770.8884 O
www.gallowayUS.com

©2015. Galloway & Company, Inc. All Rights Reserved

THE FAIRWAYS AT WOLF CREEK P.R.U.D. PHASE 4
A PORTION OF THE NORTHWEST QUARTER OF SECTION 22,
TOWNSHIP 7 NORTH, RANGE 1 EAST, SALT LAKE BASE & MERIDIAN
EDEN, COUNTY OF WEBER, STATE OF UTAH

DEVELOPER
THE FAIRWAYS AT WOLF CREEK LLC
5200 S. HIGHLAND DRIVE STE 101
SALT LAKE CITY, UT 84117

WEBER COUNTY ATTORNEY

I HAVE EXAMINED THE FINANCIAL GUARANTEE AND OTHER DOCUMENTS ASSOCIATED WITH THIS SUBDIVISION PLAT AND IN MY OPINION THEY CONFORM WITH THE COUNTY ORDINANCE APPLICABLE THERETO AND NOW IN FORCE AND AFFECT.
SIGNED THIS _____, DAY OF _____, , 20_____.

_____.
SIGNATURE

WEBER COUNTY SURVEYOR

I HEREBY CERTIFY THAT THE WEBER COUNTY SURVEYOR'S OFFICE HAS REVIEWED THIS PLAT FOR MATHEMATICAL CORRECTNESS, SECTION CORNER DATA AND FOR HARMONY WITH LINES AND MONUMENTS ON RECORD IN THE COUNTY OFFICES. THE APPROVAL OF THIS PLAT BY THE WEBER COUNTY SURVEYORS DOES NOT RELIEVE THE LICENSED LAND SURVEYOR WHO EXECUTED THIS PLAT FROM RESPONSIBILITIES AND/OR LIABILITIES ASSOCIATED THEREWITH. SIGNED THIS _____, DAY OF _____,, 20 _____.

_____.
COUNTY SURVEYOR

WEBER COUNTY ENGINEER

I HEREBY CERTIFY THAT THE REQUIRED PUBLIC IMPROVEMENT STANDARDS AND DRAWINGS FOR THIS SUBDIVISION CONFORM WITH COUNTY STANDARDS AND THE AMOUNT OF THE FINANCIAL GUARANTEE IS SUFFICIENT FOR THE INSTALLATION OF THESE IMPROVEMENT.
SIGNED THIS _____, DAY OF _____, , 20 _____.

_____.
SIGNATURE

WEBER COUNTY PLANNING COMMISSION APPROVAL

THIS IS TO CERTIFY THAT THIS SUBDIVISION PLAT WAS DULY APPROVED BY THE WEBER COUNTY PLANNING COMMISSION ON THE DAY OF _____, 20 _____.

_____.
CHAIRMAN-WEBER COUNTY PLANNING COMMISSION

WEBER COUNTY COMMISSION ACCEPTANCE

THIS IS TO CERTIFY THAT THIS SUBDIVISION PLAT, THE DEDICATION OF THE STREETS AND OTHER PUBLIC WAYS AND FINANCIAL GUARANTEE OF PUBLIC IMPROVEMENTS ASSOCIATED WITH THIS SUBDIVISION THEREON ARE HEREBY APPROVED AND ACCEPTED BY THE COMMISSIONERS OF WEBER COUNTY, UTAH
THIS _____, DAY OF _____, , 20 _____.

_____.
CHAIRMAN, WEBER COUNTY COMMISSION

ATTEST: _____.
TITLE: _____.

WOLF CREEK WATER AND SEWER IMPROVEMENT DISTRICT

THIS IS TO CERTIFY THAT THIS SUBDIVISION PLAT WAS DULY APPROVED BY THE WOLF CREEK WATER AND SEWER DISTRICT ON THE DAY OF _____, 20 _____.

_____.
GENERAL MANAGER

RECORDED #

STATE OF UTAH, COUNTY OF WEBER,
RECORDED AND FILED AT THE

REQUEST OF: _____.
ENTRY NO: _____.
DATE: _____ TIME: _____.
BOOK: _____, PAGE: _____.
_____.
FEE %
_____.
WEBER COUNTY RECORDER

THE FAIRWAYS AT WOLF CREEK P.R.U.D., PHASE 5

A PORTION OF THE NORTHWEST QUARTER OF SECTION 22, TOWNSHIP 7 NORTH, RANGE 1 EAST, SALT LAKE BASE & MERIDIAN
EDEN, COUNTY OF WEBER, STATE OFUTAH
NOVEMBER 2016

SURVEYOR'S CERTIFICATE

I, LYLE BISSEGGER, DO HEREBY CERTIFY THAT I AM A REGISTERED LAND SURVEYOR IN THE STATE OF UTAH, AND THAT I HOLD CERTIFICATE NO. 376082 IN ACCORDANCE WITH TITLE 58, CHAPTER 22, OF THE PROFESSIONAL ENGINEERS AND LAND SURVEYING LICENSING ACT, I ALSO CERTIFY THAT I HAVE COMPLETED A SURVEY F THE PROPERTY DESCRIBED HEREON IN ACCORDANCE WITH SECTION 17-23-17 AND THAT I HAVE VERIFIED ALL MEASUREMENTS SHOWN HEREON THIS PLAT OF TRAPPERS RIDE AT WOLF CREEK P.R.U.D. PHASE 8 IN WEBER COUNTY, UTAH AND THAT IT HAS BEEN CORRECTLY DRAWN TO THE DESIGNATED SCALE AND IS A TRUE AND CORRECT REPRESENTATION OF THE FOLLOWING DESCRIPTION OF LANDS INCLUDED IN SAID SUBDIVISION, BASED ON DATA COMPILED FROM RECORDS IN THE WEBER COUNTY RECORDERS OFFICE, AND ALL LOTS MEET THE REQUIREMENTS OF WEBER COUNTY LAND USE CODI WCO 106-1-8(C)(1).
MONUMENTS HAVE BEEN FOUND OR PLACED AS REPRESENTED ON THS PLAT

SIGNATURE: _____

REGISTRATION NO.: 376082

LEGAL DESCRIPTION

A PARCEL OF LAND SITUATED IN THE NORTHWEST QUARTER OF SECTION 22, T.7N., R.1E. OF THE SALT LAKE BASE AND MERIDIAN, EDEN, WEBER COUNTY, STATE OF UTAH, AND BEING MORE PARTICULARLY DESCRIBED AS FOLLOWS:
BASIS OF BEARING:
THE WEST LINE OF THE NORTHWEST QUARTER OF SECTION 22, T.7N., R.1E. OF THE SALT LAKE BASE AND MERIDIAN, MONUMENTED ON THE SOUTH BY A 3" BRASS CAP, STAMPED WEBER COUNTY, AND ON THE NORTH BY A 3" BRASS CAP, STAMPED WEBER COUNTY, AND IS CONSIDERED TO BEAR N00°20'47"E.

COMMENCING AT THE WEST QUARTER CORNER OF SAID SECTION 22. THENCE N00°20'47"E ALONG THE WEST LINE OF SAID SECTION A DISTANCE OF 400.01 FEET TO THE POINT OF BEGINNING;
THENCE N00°20'47"E ALONG THE WEST LINE OF SAID SECTION A DISTANCE OF 1248.69 FEET;
THENCE S56°49'08"E, A DISTANCE OF 164.53 FEET;
THENCE S59°08'40"E, A DISTANCE OF 60.09 FEET;
THENCE S53°09'24"E, A DISTANCE OF 159.59 FEET;
THENCE S55°14'14"W, A DISTANCE OF 34.64 FEET;
THENCE S04°04'29W, A DISTANCE OF 785.51 FEET;
THENCE N88°01'15" W, A DISTANCE OF 98.86 FEET;
THENCE S18°46'41"W, A DISTANCE OF 78.02 FEET TO A POINT OF CURVATURE;
THENCE ALONG SAID CURVE TO THE LEFT WHOSE CENTER BEARS S71°13'19"E, HAVING A RADIUS OF 70.00 FEET, A CENTRAL ANGLE OF 37°57'45" AND A LENGTH OF 46.38 FEET;
THENCE S19°11'06"E, A DISTANCE OF 19.91 FEET TO A POINT OF CURVATURE;
THENCE ALONG SAID CURVE TO THE RIGHT WHOSE CENTER BEARS S70°48'54"W, HAVING A RADIUS OF 230.00 FEET, A CENTRAL ANGLE OF 14°38'43" AND A LENGTH OF 58.79 FEET;
THENCE S04°36'50"E, A DISTANCE OF 28.67 FEET;
THENCE S85°23'10"W, A DISTANCE OF 5.49 FEET TO A POINT ON THE NORTH LINE OF FAIRWAY OAKS AT WOLF CREEK PRUD PHASE 1, 1ST AMENDMENT;
THENCE S78°24'08"W, A DISTANCE OF 60.00 FEET ALONG THE NORTH LINE OF SAID FAIRWAY OAKS AT WOLF CREEK;
THENCE N89°14'39"W, A DISTANCE OF 73.37 FEET ALONG THE NORTH LINE OF SAID FAIRWAY OAKS AT WOLF CREEK TO THE POINT OF BEGINNING,

CONTAINING 276,979 SQUARE FEET, OR 6.36 ACRES MORE OR LESS.

OWNERS DEDICATION

WE, THE UNDERSIGNED OWNERS OF THE HEREON DESCRIBED TRACT OF LAND, HEREBY SET APART AND SUBDIVIDE THE SAME INTO LOTS AND STREETS AS SHOWN ON THIS PLAT AND NAME SAID TRACT;

THE FAIRWAYS AT WOLF CREEK P.R.U.D., PHASE 5

AND DO HEREBY DEDICATE, GRANT AND CONVEY TO WEBER COUNTY, UTAH ALL THOSE PARTS OR PORTIONS OF SAID TRACT OF LAND DESIGNATED AS STREETS THE SAME TO BE USED AS PUBLIC THOROUGHFARES FOREVER .

AND HEREBY GRANT AND DEDICATE A PERPETUAL RIGHT AND EASEMENT OVER, UPON AND UNDER THE LANDS DESIGNATED ON THE PLAT AS PUBLIC UTILITY, STORM WATER DETENTION PONDS, DRAINAGE AND CANAL MAINTENANCE EASEMENTS, THE SAME TO BE USED FOR THE INSTALLATION, MAINTENANCE, AND OPERATION OF PUBLIC UTILITY SERVICE LINES, STORM DRAINAGE FACILITIES IRRIGATION CANALS OR FOR THE PERPETUAL PRESERVATION OF WATER DRAINAGE CHANNELS IN THEIR NATURAL STATE WHICHEVER IS APPLICABLE AS MAY AUTHORIZED BY WEBER COUNTY, UTAH, WITH NO BUILDINGS OR STRUCTURES BEING ERECTED WITHIN SUCH EASEMENTS AND DO HEREBY GRANT AND CONVEY TO THE PRUD UNIT OWNERS ASSOCIATION, ALL THOSE PARTS OR PORTIONS OF SAID TRACT OF LAND DESIGNATED AS COMMON AREAS TO BE USED FOR RECREATIONAL AND OPEN SPACE PURPOSES FOR THE BENEFIT OF EACH UNIT OWNER ASSOCIATION MEMBER IN COMMON WITH ALL OTHERS IN THE SUBDIVISION AND GRANT AND DEDICATE TO WEBER COUNTY A PERPETUAL OPEN SPACE RIGHT AND EASEMENT ON AND OVER THE COMMON AREAS TO GUARANTEE TO WEBER COUNTY THAT THE COMMON AREAS REMAIN OPEN AND UNDEVELOPED EXCEPT FOR APPROVED RECREATIONAL, PARKING AND OPEN SPACE PURPOSES. THE FOREGOING SHALL NOT CONSTITUTE A DEDICATION OF THE COMMON AREA PARCELS FOR PUBLIC USE, SUCH PARCELS BEING RESTRICTED TO USE BY THE ASSOCIATION MEMBERS AND THEIR GUESTS AND OTHERS AS SET FORTH IN THE NEIGHBORHOOD DECLARATION AND THE MASTER DECLARATION. DECLARANT DOES ALSO HEREBY GRANT AND DEDICATE A PERPETUAL EASEMENT OVER, UPON, AND UNDER THE LANDS DESIGNATED AS COMMON AREA PARCELS HEREON AS A PUBLIC UTILITY EASEMENT, THE SAME TO BE USED FOR INSTALLATION, MAINTENANCE, AND OPERATION OF PUBLIC UTILITY SERVICE LINES, AS NECESSARY.

SIGNED THIS THE_____ DAY OF_____ , 20__

_____
THE FAIRWAYS AT WOLF CREEK LLC
RUSS WATTS, MANAGING MEMBER

ACKNOWLEDGMENT

STATE OF UTAH)
) SS
COUNTY OF WEBER)

ON THIS DAY OF , 20__

ON THE_____ DAY OF_____ , 2016, PERSONALLY APPEARED BEFORE ME RUSS WATTS, WHO BEING BY ME DULY SWORN DID SAY THAT HE IS A MANAGING MEMBER OF THE FAIRWAYS AT WOLF CREEK, L.L.C. AND THAT SAID INSTRUMENT WAS SIGNED IN BEHALF OF SAID L.L.C. BY A RESOLUTION OF ITS MEMBERS AND RUSS WATTS ACKNOWLEDGED TO ME THAT SAID L.L.C. EXECUTED THE SAME.

_____
NOTARY PUBLIC

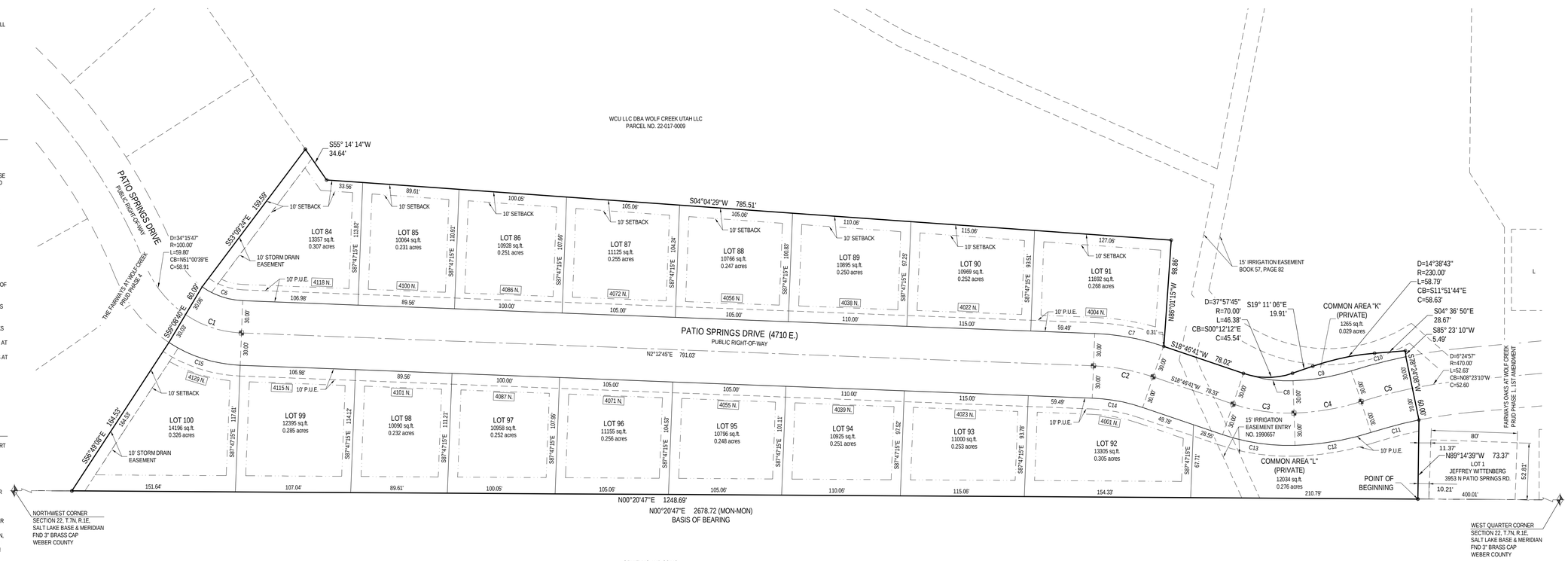

PLAT NOTES

1. UNLESS OTHERWISE DIMENSIONED ON THIS PLAT, SETBACKS FOR THIS SUBDIVISION ARE AS FOLLOWS: FRONT= 15 FEET, REAR= 15 FEET, SIDE= 9 FEET, SIDE FACING STREET ON CORNER LOT= 20 FEET
2. THIS PLAT IS SUBJECT TO THAT CERTAIN AMENDED AND RESTATED DECLARATION OF COVENANTS, CONDITIONS, AND RESTRICTIONS OF THE FAIRWAYS AT WOLF CREEK PRUD ("NEIGHBORHOOD DECLARATION") EXECUTED BY FAIRWAYS AT WOLF CREEK, LLC ("DECLARANT") AS WELL AS THAT CERTAIN MASTER DECLARATION OF COVENANTS, CONDITIONS, AND RESTRICTIONS FOR WOLF CREEK RESORT ("MASTER DECLARATION") EXECUTED BY WOLF CREEK PROPERTIES, LC ("MASTER DEVELOPER"). BOTH NEIGHBORHOOD DECLARATION AND MASTER DECLARATION HAVE BEEN RECORDED IN THE OFFICE OF THE WEBER COUNTY RECORDER WHICH SHALL SET FORTH THE RESTRICTIONS AND GENERAL PLAN OF IMPROVEMENT FOR THE PROPERTY DESCRIBED IN THIS PLAT. CERTAIN TERMS NOT OTHERWISE DEFINED IN THIS PLAT SHALL HAVE THE MEANINGS SET FORTH IN THE NEIGHBORHOOD DECLARATION OR MASTER DECLARATION.
3. PURSUANT TO THE NEIGHBORHOOD DECLARATION, THE FAIRWAYS AT WOLF CREEK OWNERS ASSOCIATION, INC., A UTAH NONPROFIT CORPORATION ("COMMUNITY ASSOCIATION") IS RESPONSIBLE FOR MAINTAINING ALL COMMUNITY AREAS, IF ANY, AND SHALL HAVE A PERPETUAL NON-EXCLUSIVE EASEMENT OVER ALL PARCELS FOR SUCH MAINTENANCE PURPOSES AS FURTHER DESCRIBED IN THE NEIGHBORHOOD DECLARATION.
4. AS FURTHER DESCRIBED IN THE NEIGHBORHOOD DECLARATION, ALL LOTS, AND ALL RESIDENCES AND IMPROVEMENTS CONSTRUCTED THEREON, SHALL COMPLY WITH THE ARCHITECTURAL CONTROL COMMITTEE ("COMMITTEE"). NO CONSTRUCTION, INSTALLATION, OR OTHER WORK WHICH IN ANY WAY ALTERS THE APPEARANCE OF ANY PROPERTY OR LOT WITHIN THE PROJECT, OR ANY RESIDENCES OR IMPROVEMENTS LOCATED THEREON, SHALL BE MADE OR DONE WITHOUT COMPLIANCE WITH THE COMMITTEE AS DESCRIBED IN THE NEIGHBORHOOD DECLARATION.
5. AS FURTHER DESCRIBED IN THE MASTER DECLARATION, ALL LOTS, AND ALL RESIDENCES AND IMPROVEMENTS CONSTRUCTED THEREON, SHALL COMPLY WITH THE DESIGN REVIEW BOARD ("BOARD"). NO CONSTRUCTION, INSTALLATION, OR OTHER WORK WHICH IN ANY WAY ALTERS THE APPEARANCE OF ANY PROPERTY OR LOT WITHIN THE PROJECT, OR ANY RESIDENCES OR IMPROVEMENTS LOCATED THEREON, SHALL BE MADE OR DONE WITHOUT COMPLIANCE WITH THE BOARD AS DESCRIBED IN THE MASTER DECLARATION.
6. THE NEIGHBORHOOD DECLARATION SETS FORTH THE TERMS AND RESTRICTIONS FOR NIGHTLY RENTALS AND LEASING OF LOTS WITHIN THE PROJECT.

LEGEND

- ALIQUOT CORNER (AS DESCRIBED)
- FOUND MONUMENT 5/8 REBAR AND CAP (GARDENER ENG.)
- SET MONUMENT 5/8" REBAR AND CAP PLS NO. 38069
- PROPOSED CENTERLINE MONUMENT
- PROPOSED BOUNDARY LIMITS
- PROPOSED LOT LINE
- PROPOSED RIGHT OF WAY LINE
- EXISTING BOUNDARY
- EXISTING LOT LINE
- EXISTING RIGHT OF WAY LINE
- SET BACK LINE

N

0 10 20 50
SCALE: 1"=50'

NARRATIVE

THIS SURVEY AND SUBSEQUENT SUBDIVISION PLAT WERE COMPLETED AT THE REQUEST OF THE "EDEN VILLAGE LLC" FRO THE PURPOSE OF SUBDIVIDING THEIR PROPERTY TO CREATE RESIDENTIAL LOTS.

BASIS OF BEARING:
THE WEST LINE OF THE NORTHWEST QUARTER OF SECTION 22, T.7N., R.1E. OF THE SALT LAKE BASE AND MERIDIAN, MONUMENTED ON THE SOUTH BY A 3" BRASS CAP, STAMPED WEBER COUNTY, AND ON THE NORTH BY A 3" BRASS CAP, STAMPED WEBER COUNTY, AND IS CONSIDERED TO BEAR N00°20'47"E.

CURVE TABLE

CURVE	RADIUS	LENGTH	DELTA	BEARING	CHORD
C1	100.00	55.27	031°40'01"	S18°02'45"W	54.57
C2	195.00	56.38	016°33'56"	N10°29'43"E	56.18
C3	160.00	57.53	020°36'06"	S08°28'38"W	57.22
C4	230.00	63.31	015°46'17"	S09°42'34"E	63.11
C5	470.00	49.23	006°00'03"	N14°35'41"W	49.20
C6	70.00	40.27	032°57'54"	S18°41'42"W	39.72
C7	225.00	65.05	016°33'56"	N10°29'43"E	64.83
C8	130.00	46.74	020°36'06"	S08°28'38"W	46.49
C9	200.00	55.05	015°46'17"	S09°42'34"E	54.88
C10	500.00	52.37	006°00'03"	N14°35'41"W	52.34
C11	440.00	46.09	006°00'05"	N14°35'40"W	46.07
C12	260.00	71.57	015°46'17"	S09°42'34"E	71.34
C13	190.00	68.32	020°36'06"	S08°28'38"W	67.95
C14	165.00	47.71	016°33'56"	N10°29'43"E	47.54
C15	130.00	70.27	030°58'07"	S17°41'48"W	69.41

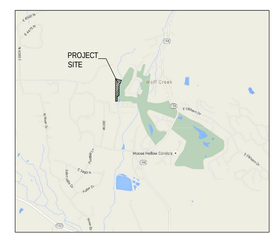

VICINITY MAP
NOT TO SCALE

Galloway
Planning. Architecture. Engineering.
Trolley Corners Building
515 South 700 East, Suite 3F
Salt Lake City, UT 84102
303.770.8884 O
www.gallowayUS.com
©2015. Galloway & Company, Inc. All Rights Reserved

THE FAIRWAYS AT WOLF CREEK P.R.U.D., PHASE 5
A PORTION OF THE NORTHWEST QUARTER OF SECTION 22,
TOWNSHIP 7 NORTH, RANGE 1 EAST, SALT LAKE BASE & MERIDIAN
EDEN, COUNTY OF WEBER, STATE OF UTAH

DEVELOPER
THE FAIRWAYS AT WOLF CREEK LLC
5200 S. HIGHLAND DRIVE STE 101
SALT LAKE CITY, UT 84117

WEBER COUNTY ATTORNEY
I HAVE EXAMINED THE FINANCIAL GUARANTEE AND OTHER DOCUMENTS ASSOCIATED WITH THIS SUBDIVISION PLAT AND IN MY OPINION THEY CONFORM WITH THE COUNTY ORDINANCE APPLICABLE THERETO AND NOW IN FORCE AND AFFECT.
SIGNED THIS _____,DAY OF _____ , 20_____.
_____.
SIGNATURE

WEBER COUNTY SURVEYOR
I HEREBY CERTIFY THAT THE WEBER COUNTY SURVEYOR'S OFFICE HAS REVIEWED THIS PLAT FOR MATHEMATICAL CORRECTNESS, SECTION CORNER DATA AND FOR HARMONY WITH LINES AND MONUMENTS ON RECORD IN THE COUNTY OFFICES. THE APPROVAL OF THIS PLAT BY THE WEBER COUNTY SURVEYORS DOES NOT RELIEVE THE LICENSED LAND SURVEYOR WHO EXECUTED THIS PLAT FROM RESPONSIBILITIES AND/OR LIABILITIES ASSOCIATED THEREWITH. SIGNED THIS _____, DAY OF _____.,
20 _____.
_____.
COUNTY SURVEYOR

WEBER COUNTY ENGINEER
I HEREBY CERTIFY THAT THE REQUIRED PUBLIC IMPROVEMENT STANDARDS AND DRAWINGS FOR THIS SUBDIVISION CONFORM WITH COUNTY STANDARDS AND THE AMOUNT OF THE FINANCIAL GUARANTEE IS SUFFICIENT FOR THE INSTALLATION OF THESE IMPROVEMENT.
SIGNED THIS _____, DAY OF _____ , 20 _____.
_____.
SIGNATURE

WEBER COUNTY PLANNING COMMISSION APPROVAL
THIS IS TO CERTIFY THAT THIS SUBDIVISION PLAT WAS DULY APPROVED BY THE WEBER COUNTY PLANNING COMMISSION ON THE DAY OF _____., 20 _____.
_____.
CHAIRMAN-WEBER COUNTY PLANNING COMMISSION

WEBER COUNTY COMMISSION ACCEPTANCE
THIS IS TO CERTIFY THAT THIS SUBDIVISION PLAT, THE DEDICATION OF THE STREETS AND OTHER PUBLIC WAYS AND FINANCIAL GUARANTEE OF PUBLIC IMPROVEMENTS ASSOCIATED WITH THIS SUBDIVISION THEREON ARE HEREBY APPROVED AND ACCEPTED BY THE COMMISSIONERS OF WEBER COUNTY, UTAH
THIS _____, DAY OF _____ , 20 _____.
_____.
CHAIRMAN, WEBER COUNTY COMMISSION

ATTEST: _____.
TITLE: _____.

WOLF CREEK WATER AND SEWER IMPROVEMENT DISTRICT
THIS IS TO CERTIFY THAT THIS SUBDIVISION PLAT WAS DULY APPROVED BY THE WOLF CREEK WATER AND SEWER DISTRICT ON THE DAY OF _____., 20 _____.
_____.
GENERAL MANAGER

RECORDED #
STATE OF UTAH, COUNTY OF WEBER,
RECORDED AND FILED AT THE

REQUEST OF: _____.
ENTRY NO: _____.
DATE: _____, TIME: _____.
BOOK: _____, PAGE: _____.
_____.
FEE %
_____.
WEBER COUNTY RECORDER

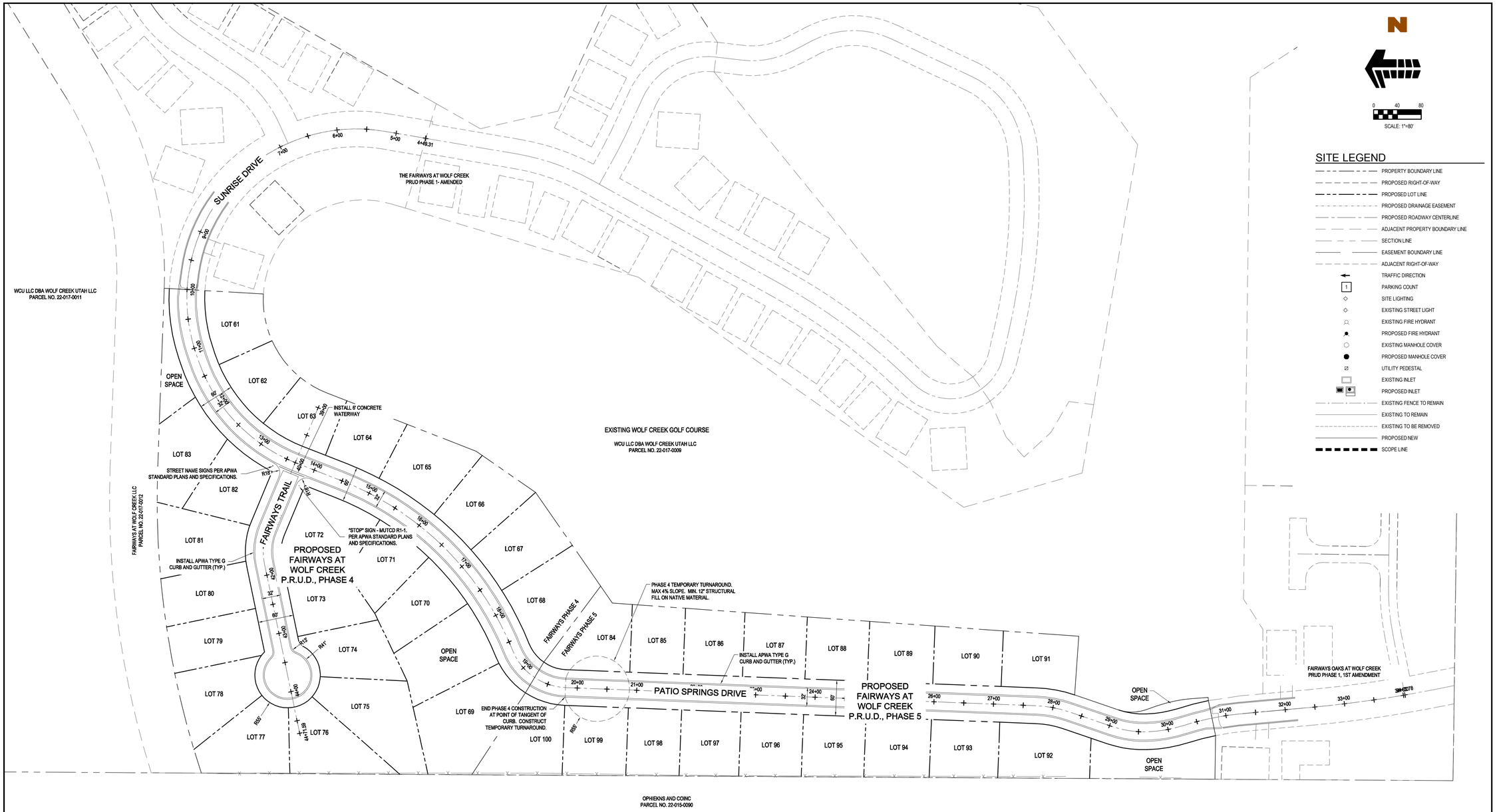

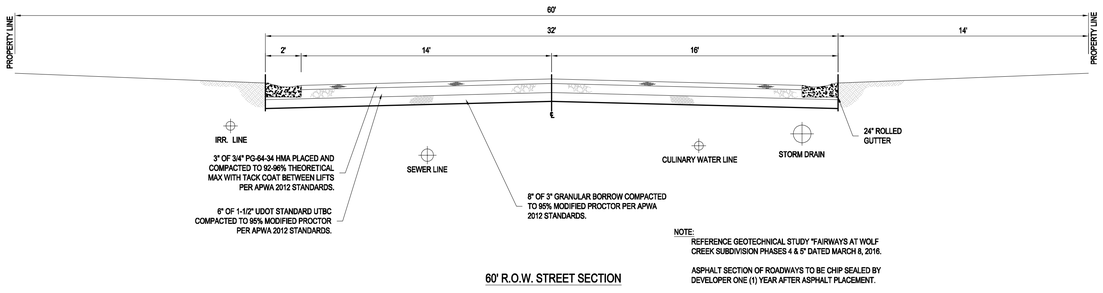

60' R.O.W. STREET SECTION

NOTE:
REFERENCE GEOTECHNICAL STUDY "FAIRWAYS AT WOLF CREEK SUBDIVISION PHASES 4 & 5" DATED MARCH 8, 2016.

ASPHALT SECTION OF ROADWAYS TO BE CHIP SEALED BY DEVELOPER ONE (1) YEAR AFTER ASPHALT PLACEMENT.

NOTES:

ALL ROADWAY IMPROVEMENTS WITHIN THE PHASE 4 BOUNDARY ARE TO BE CONSTRUCTED AS PART OF THE PHASE 4 CONTRACT. SEE NOTE ON PLAN FOR PHASE 4 ROADWAY CONSTRUCTION LIMITS AND CONSTRUCT TEMPORARY EMERGENCY TURNAROUND PER WEBER COUNTY STANDARDS AND SPECIFICATIONS.

ALL ROADWAY IMPROVEMENTS WITHIN THE PHASE 5 BOUNDARY ARE TO BE CONSTRUCTED AS PART OF THE PHASE 5 CONTRACT.

Know what's below. Call before you dig.

Galloway
Planning. Architecture. Engineering.
Trolley Corners Building
515 South 700 East, Suite 3F
Salt Lake City, UT 84102
303.770.8884 O
www.gallowayUS.com
©2015. Galloway & Company, Inc. All Rights Reserved

Watts ENTERPRISES

LICENSED PROFESSIONAL ENGINEER No. 275600 Richard M. Piggott 1-12-17 STATE OF UTAH

THESE PLANS ARE AN INSTRUMENT OF SERVICE AND ARE THE PROPERTY OF GALLOWAY, AND MAY NOT BE DUPLICATED, DISCLOSED, OR REPRODUCED WITHOUT THE WRITTEN CONSENT OF GALLOWAY. COPYRIGHTS AND INFRINGEMENTS WILL BE ENFORCED AND PROSECUTED.

WATTS ENTERPRISES FAIRWAYS AT WOLF CREEK PHASE 4 & 5

EDEN, UTAH 84310

#	Date	Issue / Description	Init.

Project No:	WAT01.01
Drawn By:	JST
Checked By:	RMP
Date:	1/12/2017

SITE PLAN

SP01

Sheet 2 of 29

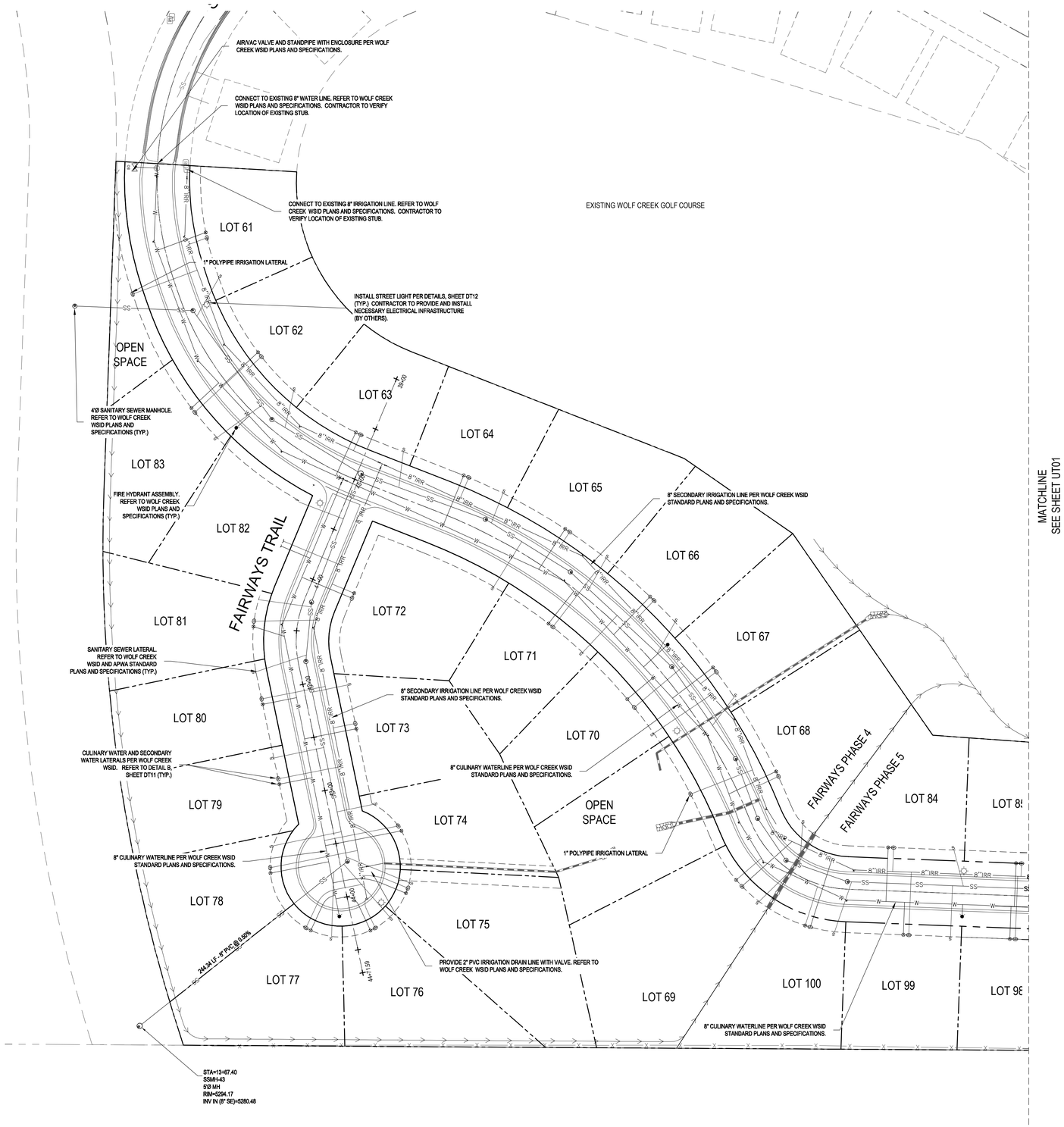

N

0 25 50

SCALE: 1"=50'

UTILITY LEGEND

—W—	EXISTING WATER LINE
—W—	PROPOSED WATER LINE
—IRR—	EXISTING IRRIGATION LINE
—IRR—	PROPOSED IRRIGATION LINE
—SS—	EXISTING SANITARY SEWER
—SS—	PROPOSED SANITARY SEWER
—STS—	EXISTING STORM SEWER
—STS—	EXISTING STORM SEWER (LESS THAN 12")
—STS—	PROPOSED STORM SEWER BY OTHERS
—STS—	PROPOSED STORM SEWER
—STS—	PROPOSED STORM SEWER (LESS THAN 12")
	WATER LINE THRUST BLOCK LOCATION
	EXISTING ELECTRICAL BOX
	PROPOSED SITE LIGHT
	EXISTING TELEPHONE PEDESTAL
	PROPOSED WATER METER ON SERVICE LATERAL
	PROPOSED IRRIGATION CONNECTION
S	PROPOSED SANITARY SEWER SERVICE LATERAL
	EXISTING FIRE HYDRANT
	PROPOSED FIRE HYDRANT
	EXISTING MANHOLE
	PROPOSED MANHOLE
	EXISTING INLET
	PROPOSED INLET

NOTES:

ALL SANITARY SEWER, WATER, AND IRRIGATION MAIN LINES ARE TO BE CONSTRUCTED AS PART OF THE PHASE 4 CONTRACT. PHASE 4 REQUIRES THE CONNECTION OF ALL UTILITIES AT THE EXISTING END OF PATIO SPRINGS DRIVE IN ORDER TO SERVICE PHASE 4.

ALL SERVICE LATERALS WITHIN THE PHASE 4 BOUNDARY ARE TO BE CONSTRUCTED AS PART OF THE PHASE 4 CONTRACT.

ALL SERVICE LATERALS WITHIN THE PHASE 5 BOUNDARY ARE TO BE CONSTRUCTED AS PART OF THE PHASE 5 CONTRACT.

ALL SANITARY SEWER, WATER, AND IRRIGATION INFRASTRUCTURE TO BE INSTALLED PER WOLF CREEK WATER AND SEWER DISTRICT STANDARDS AND SPECIFICATIONS. REFER TO DETAILS ON SHEET DT03 FOR STANDARD DETAILS. COORDINATE WITH WOLF CREEK WATER AND SEWER DISTRICT FOR MORE DETAILS.

811 Know what's below. Call before you dig.

Galloway
Planning. Architecture. Engineering.
Trolley Corners Building
515 South 700 East, Suite 3F
Salt Lake City, UT 84102
303.770.8884 O
www.gallowayUS.com

©2015. Galloway & Company, Inc. All Rights Reserved

Watts ENTERPRISES

LICENSED PROFESSIONAL ENGINEER No. 275600 Richard M. Piggott 1-13-17 STATE OF UTAH

THESE PLANS ARE AN INSTRUMENT OF SERVICE AND ARE THE PROPERTY OF GALLOWAY, AND MAY NOT BE DUPLICATED, DISCLOSED, OR REPRODUCED WITHOUT THE WRITTEN CONSENT OF GALLOWAY. COPYRIGHTS AND INFRINGEMENTS WILL BE ENFORCED AND PROSECUTED.

WATTS ENTERPRISES
FAIRWAYS AT WOLF CREEK
PHASE 4 & 5

EDEN, UTAH 84310

#	Date	Issue / Description	Init.

Project No:	WAT01.01
Drawn By:	JST
Checked By:	RMP
Date:	1/12/2017

UTILITY PLAN

UT01

Sheet 3 of 29

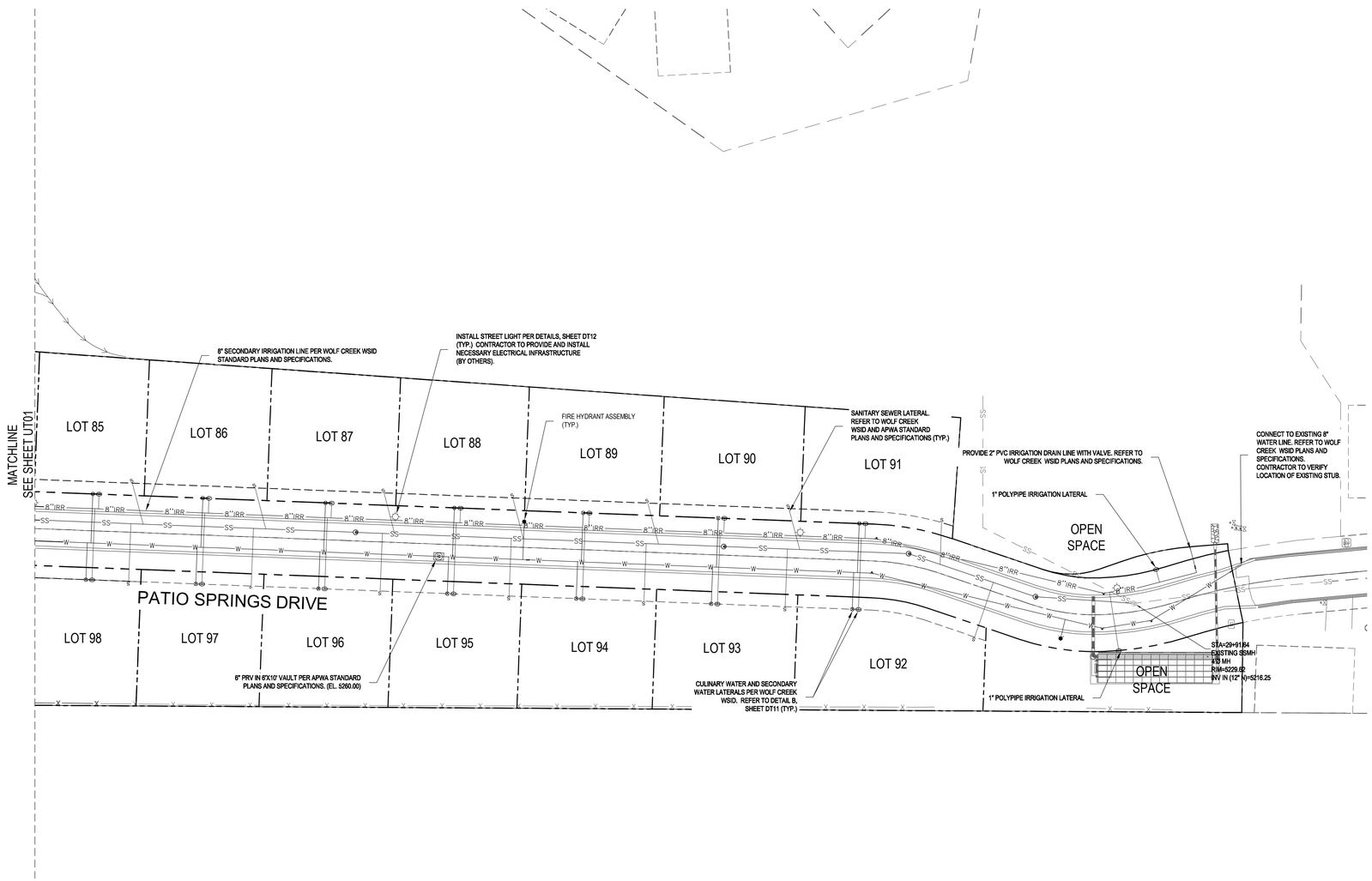

N

0 40 80

SCALE: 1"=80'

UTILITY LEGEND

—W—	EXISTING WATER LINE
—W—	PROPOSED WATER LINE
—IRR—	EXISTING IRRIGATION LINE
—IRR—	PROPOSED IRRIGATION LINE
—SS—	EXISTING SANITARY SEWER
—SS—	PROPOSED SANITARY SEWER
—STS—	EXISTING STORM SEWER
—STS—	EXISTING STORM SEWER (LESS THAN 12")
—STS—	PROPOSED STORM SEWER BY OTHERS
—STS—	PROPOSED STORM SEWER
—STS—	PROPOSED STORM SEWER (LESS THAN 12")
	WATER LINE THRUST BLOCK LOCATION
	EXISTING ELECTRICAL BOX
	PROPOSED SITE LIGHT
	EXISTING TELEPHONE PEDESTAL
	PROPOSED WATER METER ON SERVICE LATERAL
	PROPOSED IRRIGATION CONNECTION
S	PROPOSED SANITARY SEWER SERVICE LATERAL
	EXISTING FIRE HYDRANT
	PROPOSED FIRE HYDRANT
	EXISTING MANHOLE
	PROPOSED MANHOLE
	EXISTING INLET
	PROPOSED INLET

NOTES:

ALL SANITARY SEWER, WATER, AND IRRIGATION MAIN LINES ARE TO BE CONSTRUCTED AS PART OF THE PHASE 4 CONTRACT. PHASE 4 REQUIRES THE CONNECTION OF ALL UTILITIES AT THE EXISTING END OF PATIO SPRINGS DRIVE IN ORDER TO SERVICE PHASE 4.

ALL SERVICE LATERALS WITHIN THE PHASE 4 BOUNDARY ARE TO BE CONSTRUCTED AS PART OF THE PHASE 4 CONTRACT.

ALL SERVICE LATERALS WITHIN THE PHASE 5 BOUNDARY ARE TO BE CONSTRUCTED AS PART OF THE PHASE 5 CONTRACT.

ALL SANITARY SEWER, WATER, AND IRRIGATION INFRASTRUCTURE TO BE INSTALLED PER WOLF CREEK WATER AND SEWER DISTRICT STANDARDS AND SPECIFICATIONS. REFER TO DETAILS ON SHEET DT03 FOR STANDARD DETAILS. COORDINATE WITH WOLF CREEK WATER AND SEWER DISTRICT FOR MORE DETAILS.

811 Know what's below. Call before you dig.

Galloway
Planning. Architecture. Engineering.
Trolley Corners Building
515 South 700 East, Suite 3F
Salt Lake City, UT 84102
303.770.8884 O
www.gallowayUS.com

©2015. Galloway & Company, Inc. All Rights Reserved

Watts ENTERPRISES

LICENSED PROFESSIONAL ENGINEER No. 275660 Richard M. Piggott 1-25-17 STATE OF UTAH

THESE PLANS ARE AN INSTRUMENT OF SERVICE AND ARE THE PROPERTY OF GALLOWAY, AND MAY NOT BE DUPLICATED, DISCLOSED, OR REPRODUCED WITHOUT THE WRITTEN CONSENT OF GALLOWAY. COPYRIGHTS AND INFRINGEMENTS WILL BE ENFORCED AND PROSECUTED.

WATTS ENTERPRISES
FAIRWAYS AT WOLF CREEK
PHASE 4 & 5

EDEN, UTAH 84310

#	Date	Issue / Description	Init.

Project No:	WAT01.01
Drawn By:	JST
Checked By:	RMP
Date:	8/18/2016

UTILITY PLAN

UT02

Sheet 4 of 29

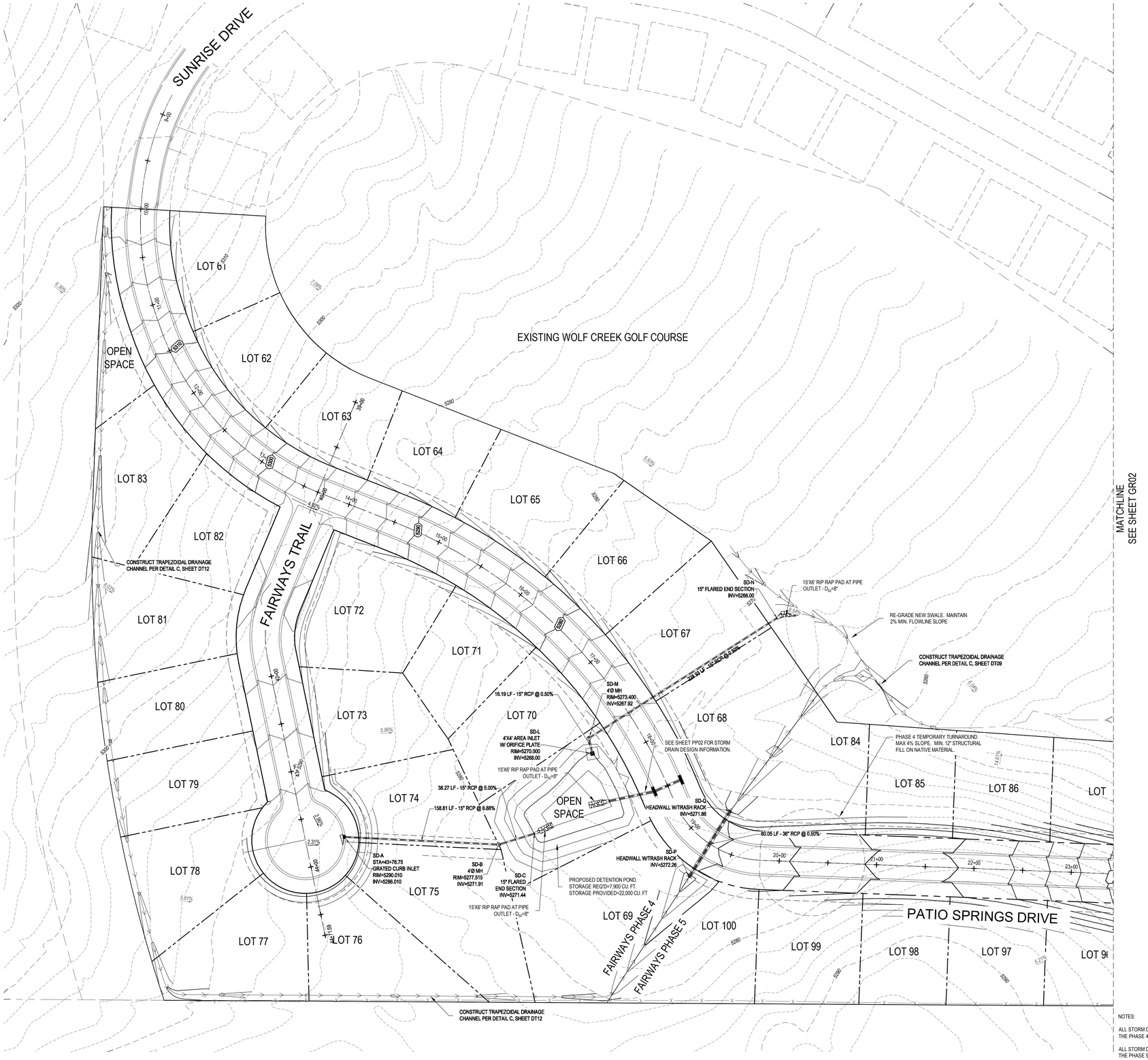

N

0 25 50

SCALE: 1"=50'

GRADING LEGEND

39	EXISTING CONTOUR
40	EXISTING CONTOUR
39	PROPOSED CONTOUR
40	PROPOSED CONTOUR
40	PROPOSED CONTOUR BY OTHERS
40.00	EXISTING SPOT ELEVATION
40.0	PROPOSED SPOT ELEVATION
40.5 / 40.0	PROPOSED TOP OF CURB ELEVATION / PROPOSED FLOWLINE ELEVATION
FF	FINISHED FLOOR
TOG	TOP OF GRATE
TC	TOP OF CURB
TOS	TOP OF SIDEWALK
FL	FLOWLINE
HP	HIGH POINT
LP	LOW POINT
ME	MATCH EXISTING
GB	GRADE BREAK
TOB	TOP OF BERM
CO	CURB OPENING
PC	POINT OF CURVE
FL INT	FLOWLINE INTERSECTION
PCR	POINT OF CURB RETURN
Ⓒ	CATCH CURB AND GUTTER
Ⓢ	SPILL CURB AND GUTTER
STS	EXISTING STORM SEWER
STS	PROPOSED STORM SEWER

NOTES:

ALL STORM DRAIN INFRASTRUCTURE WITHIN THE PHASE 4 BOUNDARY IS TO BE CONSTRUCTED AS PART OF THE PHASE 4 CONTRACT.

ALL STORM DRAIN INFRASTRUCTURE WITHIN THE PHASE 5 BOUNDARY IS TO BE CONSTRUCTED AS PART OF THE PHASE 5 CONTRACT.

811 Know what's below. Call before you dig.

Galloway
Planning. Architecture. Engineering.
Trolley Corners Building
515 South 700 East, Suite 3F
Salt Lake City, UT 84102
303.770.8884 O
www.gallowayUS.com

©2015. Galloway & Company, Inc. All Rights Reserved

Watts ENTERPRISES

LICENSED PROFESSIONAL ENGINEER No. 275600 Richard M. Piggott 1-13-17 STATE OF UTAH

THESE PLANS ARE AN INSTRUMENT OF SERVICE AND ARE THE PROPERTY OF GALLOWAY, AND MAY NOT BE DUPLICATED, DISCLOSED, OR REPRODUCED WITHOUT THE WRITTEN CONSENT OF GALLOWAY. COPYRIGHTS AND INFRINGEMENTS WILL BE ENFORCED AND PROSECUTED.

WATTS ENTERPRISES
FAIRWAYS AT WOLF CREEK
PHASE 4 & 5

EDEN, UTAH 84310

#	Date	Issue / Description	Init.

Project No:	WAT01.01
Drawn By:	JST
Checked By:	RMP
Date:	1/12/2017

GRADING PLAN

GR01

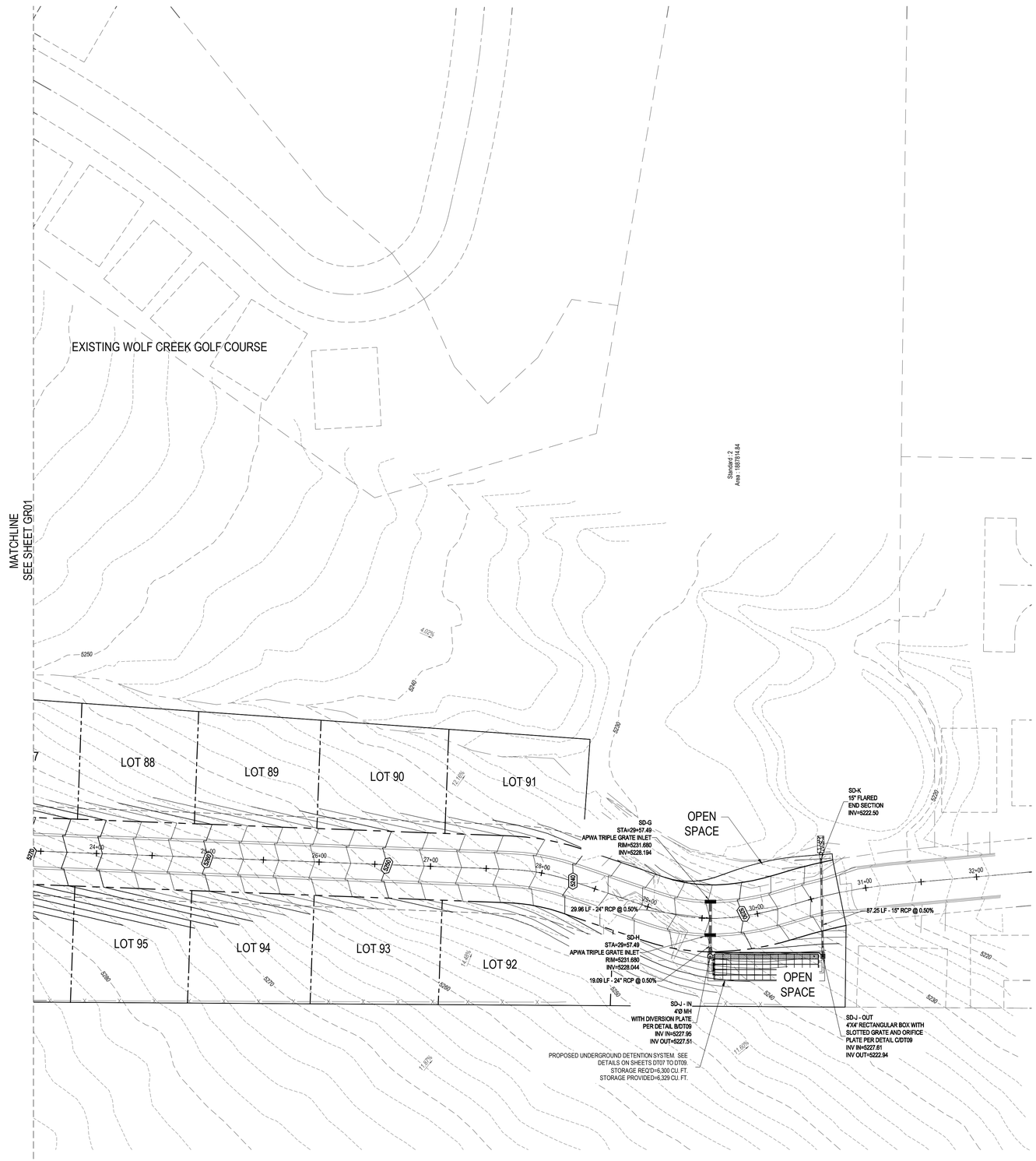

N

0 25 50
SCALE: 1"=50'

GRADING LEGEND

39	EXISTING CONTOUR
40	EXISTING CONTOUR
39	PROPOSED CONTOUR
40	PROPOSED CONTOUR
40	PROPOSED CONTOUR BY OTHERS
40.00	EXISTING SPOT ELEVATION
40.0	PROPOSED SPOT ELEVATION
40.5 / 40.0	PROPOSED TOP OF CURB ELEVATION / PROPOSED FLOWLINE ELEVATION
FF	FINISHED FLOOR
TOG	TOP OF GRATE
TC	TOP OF CURB
TOS	TOP OF SIDEWALK
FL	FLOWLINE
HP	HIGH POINT
LP	LOW POINT
ME	MATCH EXISTING
GB	GRADE BREAK
TOB	TOP OF BERM
CO	CURB OPENING
PC	POINT OF CURVE
FL INT	FLOWLINE INTERSECTION
PCR	POINT OF CURB RETURN
Ⓒ	CATCH CURB AND GUTTER
Ⓢ	SPILL CURB AND GUTTER
STS	EXISTING STORM SEWER
STS	PROPOSED STORM SEWER

NOTES:

ALL STORM DRAIN INFRASTRUCTURE WITHIN THE PHASE 4 BOUNDARY IS TO BE CONSTRUCTED AS PART OF THE PHASE 4 CONTRACT.

ALL STORM DRAIN INFRASTRUCTURE WITHIN THE PHASE 5 BOUNDARY IS TO BE CONSTRUCTED AS PART OF THE PHASE 5 CONTRACT.

811 Know what's below. Call before you dig.

Galloway
Planning. Architecture. Engineering.
Trolley Corners Building
515 South 700 East, Suite 3F
Salt Lake City, UT 84102
303.770.8884 O
www.gallowayUS.com

©2015. Galloway & Company, Inc. All Rights Reserved

Watts ENTERPRISES

LICENSED PROFESSIONAL ENGINEER
No. 275600
Richard M. Piggott
1-13-17
STATE OF UTAH

THESE PLANS ARE AN INSTRUMENT OF SERVICE AND ARE THE PROPERTY OF GALLOWAY, AND MAY NOT BE DUPLICATED, DISCLOSED, OR REPRODUCED WITHOUT THE WRITTEN CONSENT OF GALLOWAY. COPYRIGHTS AND INFRINGEMENTS WILL BE ENFORCED AND PROSECUTED.

WATTS ENTERPRISES
FAIRWAYS AT WOLF CREEK
PHASE 4 & 5

EDEN, UTAH 84310

#	Date	Issue / Description	Init.

Project No:	WAT01.01
Drawn By:	JST
Checked By:	RMP
Date:	8/18/2016

GRADING PLAN

GR02

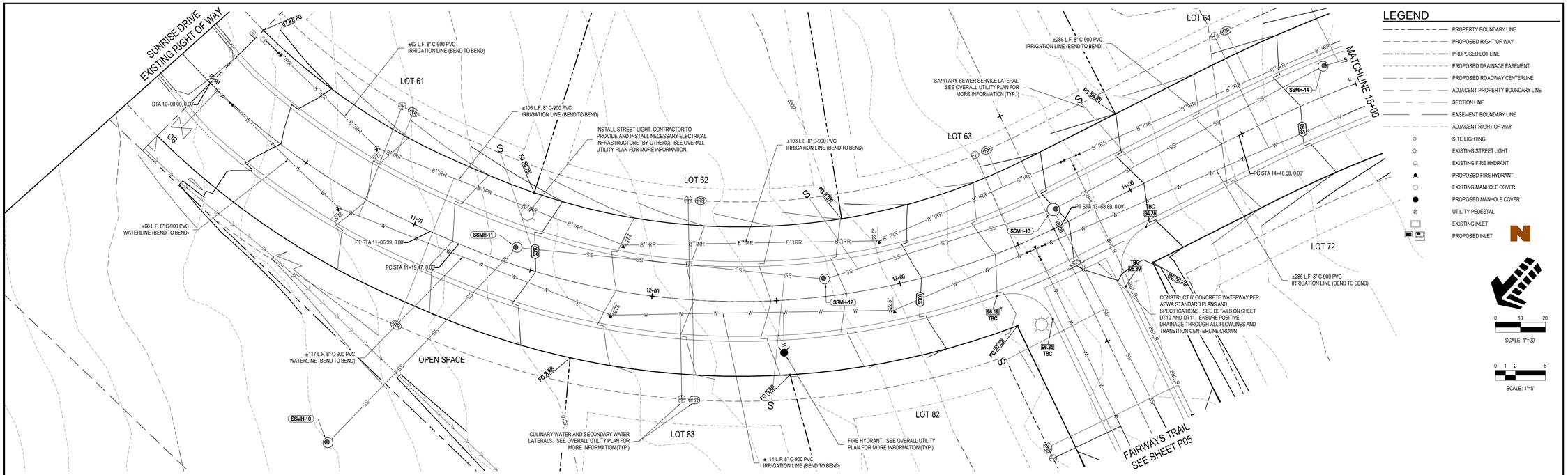

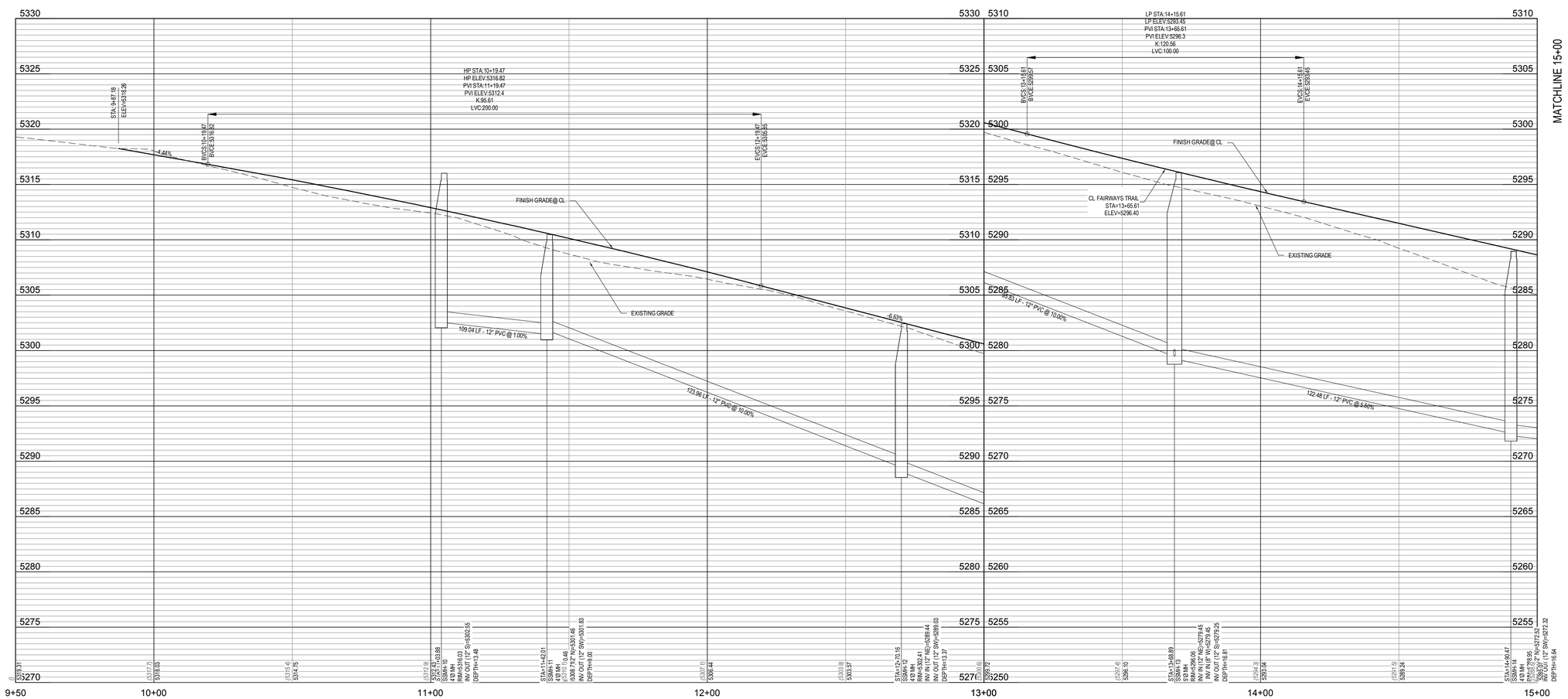

PROFILE ROAD 1: STA 9+50 T0 STA 13+00

PROFILE ROAD 1: STA 9+50 T0 STA 15+00

PROFILE ROAD 1: STA 13+00 T0 STA 15+00

Galloway
Planning. Architecture. Engineering.
Trolley Corners Building
515 South 700 East, Suite 3F
Salt Lake City, UT 84102
303.770.8884 O
www.gallowayUS.com

©2015. Galloway & Company, Inc. All Rights Reserved

Watts ENTERPRISES

LICENSED PROFESSIONAL ENGINEER
No. 275600
Richard M. Piggott
1/15/17
STATE OF UTAH

THESE PLANS ARE AN INSTRUMENT OF SERVICE AND ARE THE PROPERTY OF GALLOWAY, AND MAY NOT BE DUPLICATED, DISCLOSED, OR REPRODUCED WITHOUT THE WRITTEN CONSENT OF GALLOWAY. COPYRIGHTS AND INFRINGEMENTS WILL BE ENFORCED AND PROSECUTED.

WATTS ENTERPRISES
FAIRWAYS AT WOLF CREEK
PHASE 4 & 5

EDEN, UTAH 84310

#	Date	Issue / Description	Init.

Project No:	WAT01.01
Drawn By:	JST
Checked By:	RMP
Date:	8/18/2016

PLAN & PROFILE

PP01

Sheet 7 of 29

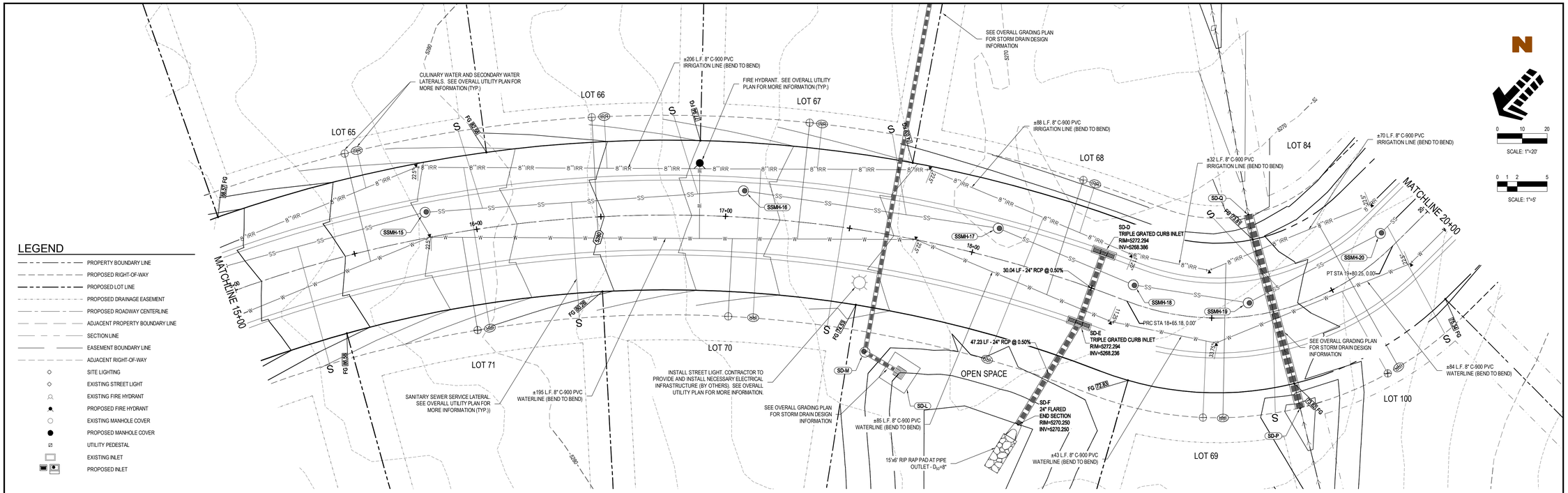

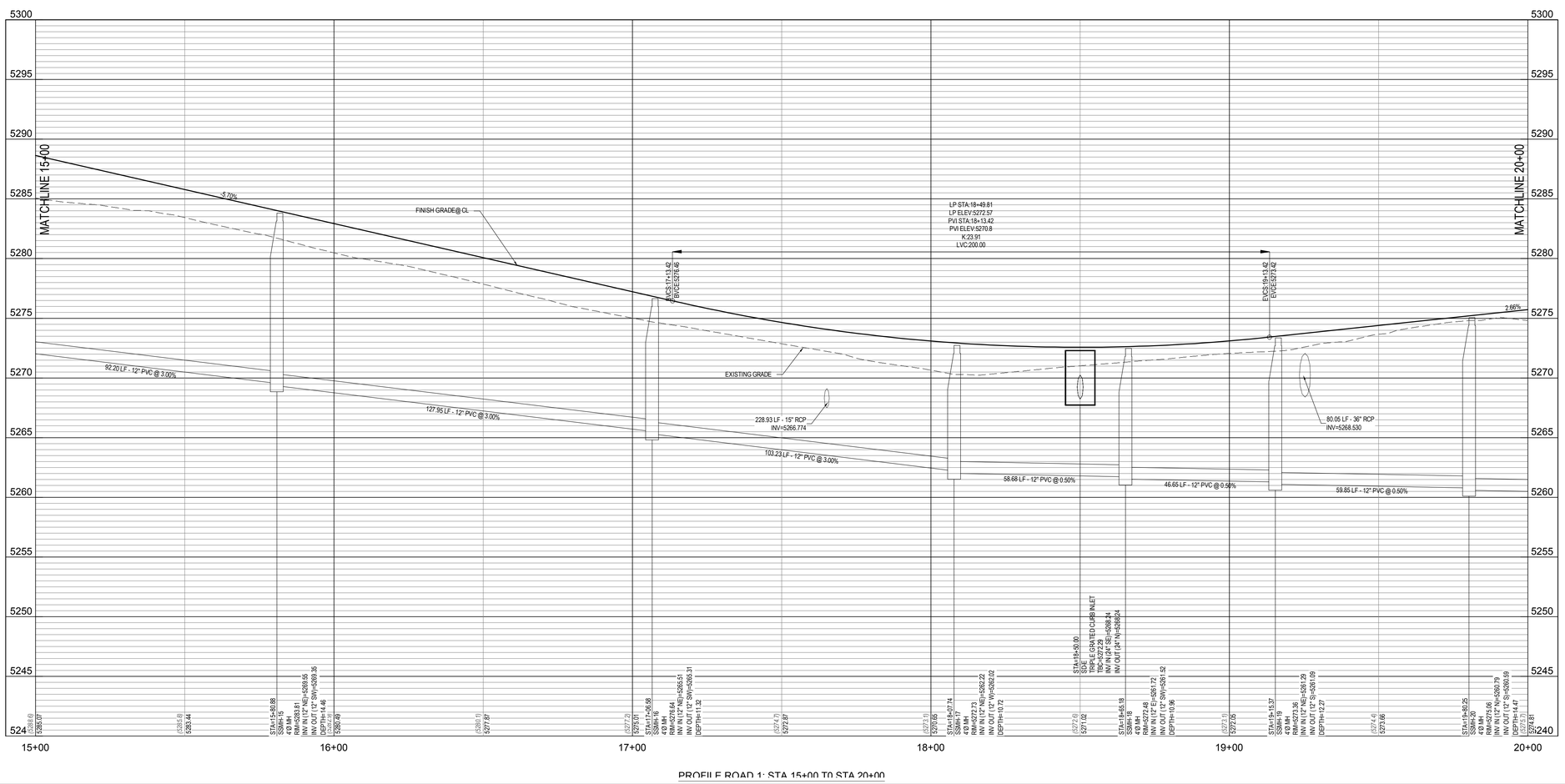

PROFILE ROAD 1: STA 15+00 TO STA 20+00

Galloway
Planning. Architecture. Engineering.
Trolley Corners Building
515 South 700 East, Suite 3F
Salt Lake City, UT 84102
303.770.8884 O
www.gallowayUS.com

©2015. Galloway & Company, Inc. All Rights Reserved

Watts ENTERPRISES

LICENSED PROFESSIONAL ENGINEER No. 275600 Richard M. Piggott 8/18/16 STATE OF UTAH

WATTS ENTERPRISES
FAIRWAYS AT WOLF CREEK
PHASE 4 & 5

EDEN, UTAH 84310

#	Date	Issue / Description	Init.

Project No:	WAT01.01
Drawn By:	JST
Checked By:	RMP
Date:	8/18/2016

PLAN & PROFILE

PP02

Sheet 8 of 29

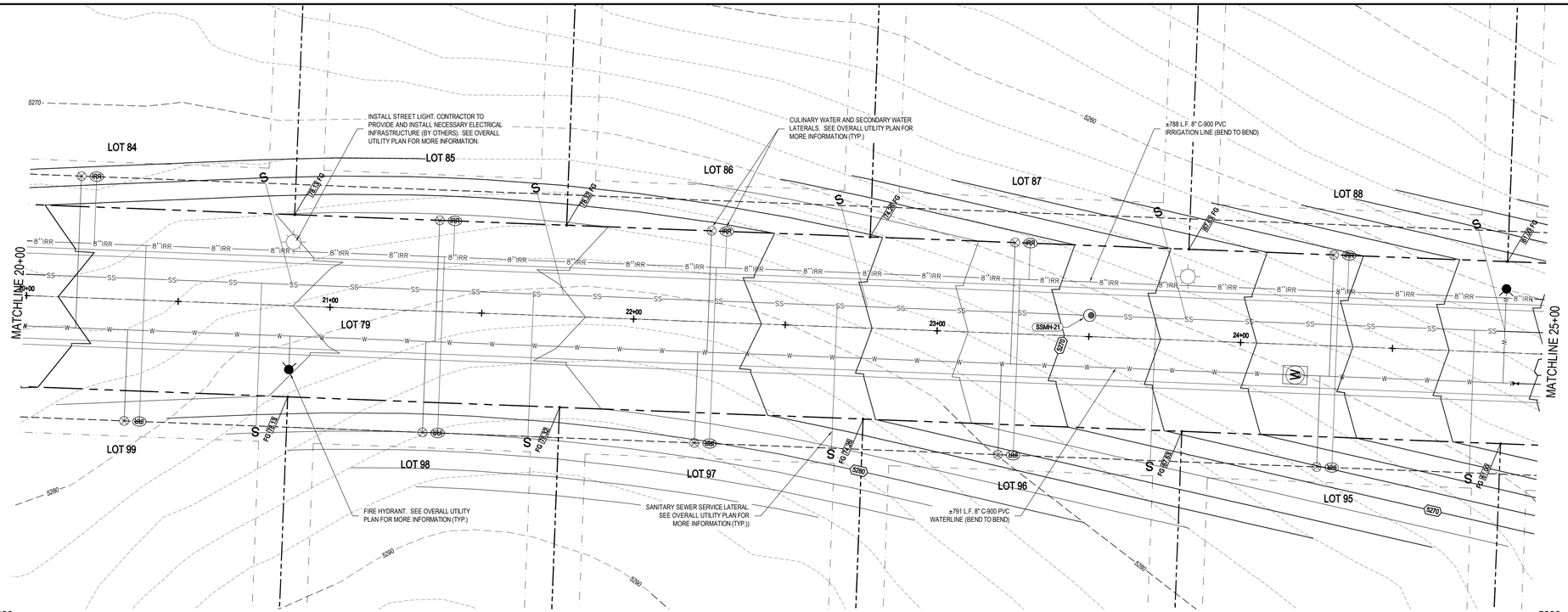

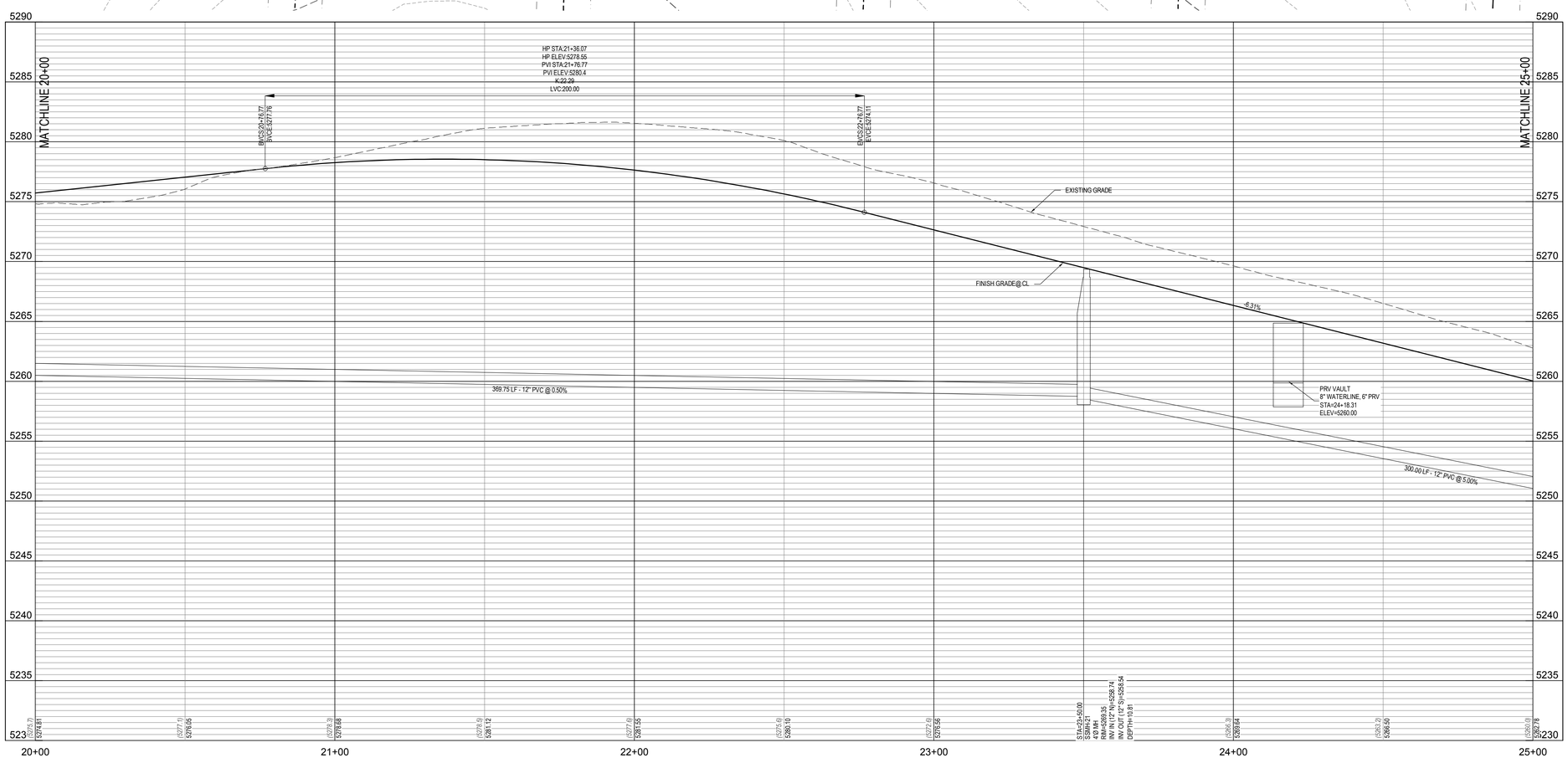

PROFILE ROAD 1: STA 20+00 T0 STA 25+00

LEGEND

- PROPERTY BOUNDARY LINE
- PROPOSED RIGHT-OF-WAY
- PROPOSED LOT LINE
- PROPOSED DRAINAGE EASEMENT
- PROPOSED ROADWAY CENTERLINE
- ADJACENT PROPERTY BOUNDARY LINE
- SECTION LINE
- EASEMENT BOUNDARY LINE
- ADJACENT RIGHT-OF-WAY
- SITE LIGHTING
- EXISTING STREET LIGHT
- EXISTING FIRE HYDRANT
- PROPOSED FIRE HYDRANT
- EXISTING MANHOLE COVER
- PROPOSED MANHOLE COVER
- UTILITY PEDESTAL
- EXISTING INLET
- PROPOSED INLET

N

0 10 20
SCALE: 1"=20'

0 1 2 5
SCALE: 1"=5'

Galloway
Planning. Architecture. Engineering.
Trolley Corners Building
515 South 700 East, Suite 3F
Salt Lake City, UT 84102
303.770.8884 O
www.gallowayUS.com

©2015. Galloway & Company, Inc. All Rights Reserved

Watts ENTERPRISES

LICENSED PROFESSIONAL ENGINEER
No. 275600
Richard M. Piggott
1-13-17
STATE OF UTAH

WATTS ENTERPRISES
FAIRWAYS AT WOLF CREEK
PHASE 4 & 5

EDEN, UTAH 84310

#	Date	Issue / Description	Init.

Project No:	WAT01.01
Drawn By:	JST
Checked By:	RMP
Date:	8/18/2016

PLAN & PROFILE

PP03

Sheet 9 of 29

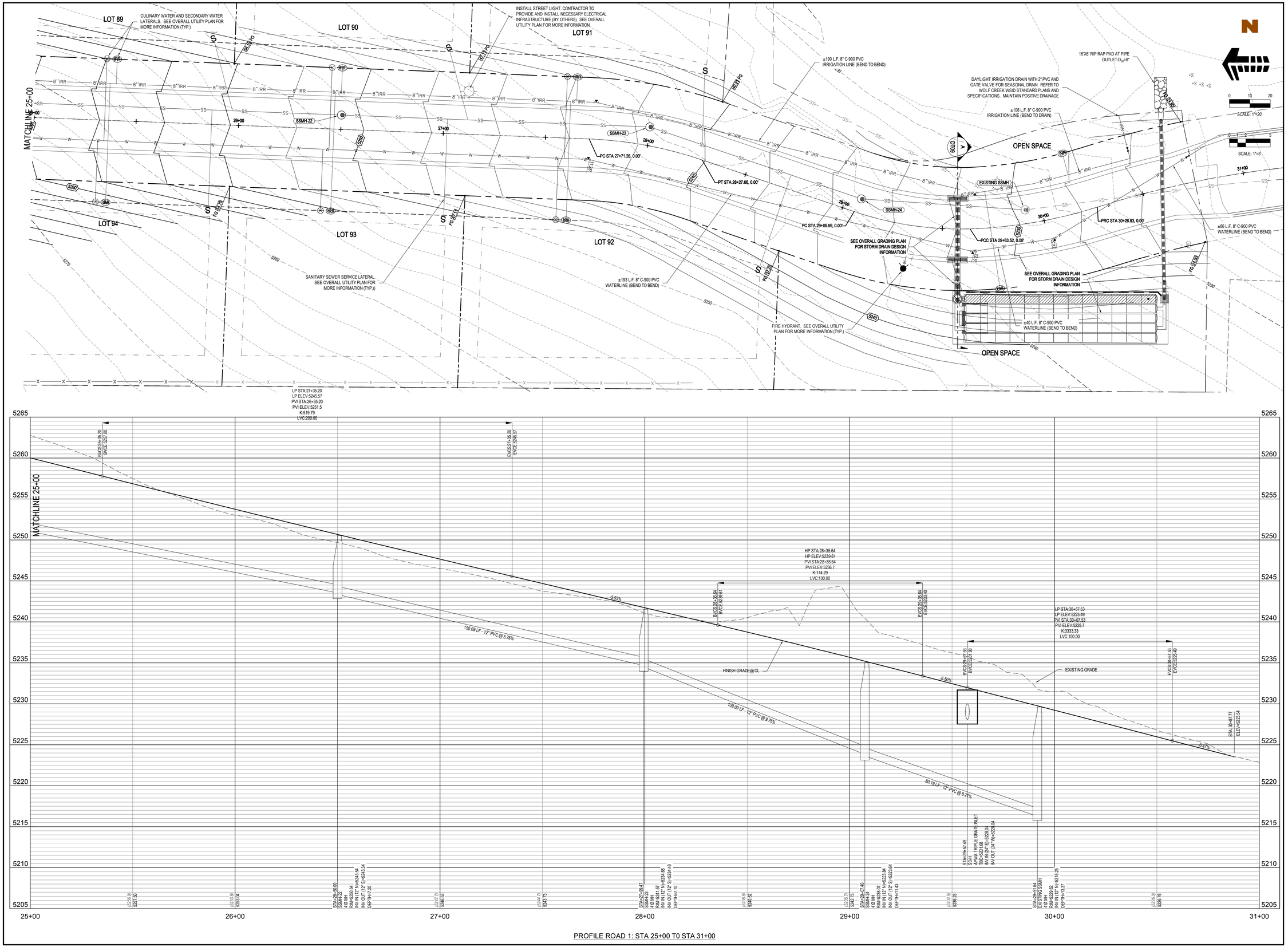

Galloway
Planning. Architecture. Engineering.
Trolley Corners Building
515 South 700 East, Suite 3F
Salt Lake City, UT 84102
303.770.8884 O
www.gallowayUS.com

©2015. Galloway & Company, Inc. All Rights Reserved

Watts ENTERPRISES

LICENSED PROFESSIONAL ENGINEER No. 275600 Richard M. Piggott 1/12/17 STATE OF UTAH

WATTS ENTERPRISES
FAIRWAYS AT WOLF CREEK
PHASE 4 & 5

EDEN, UTAH 84310

#	Date	Issue / Description	Init.

Project No:	WAT01.01
Drawn By:	JST
Checked By:	RMP
Date:	1/12/2017

PLAN & PROFILE

PP04

Sheet 10 of 29

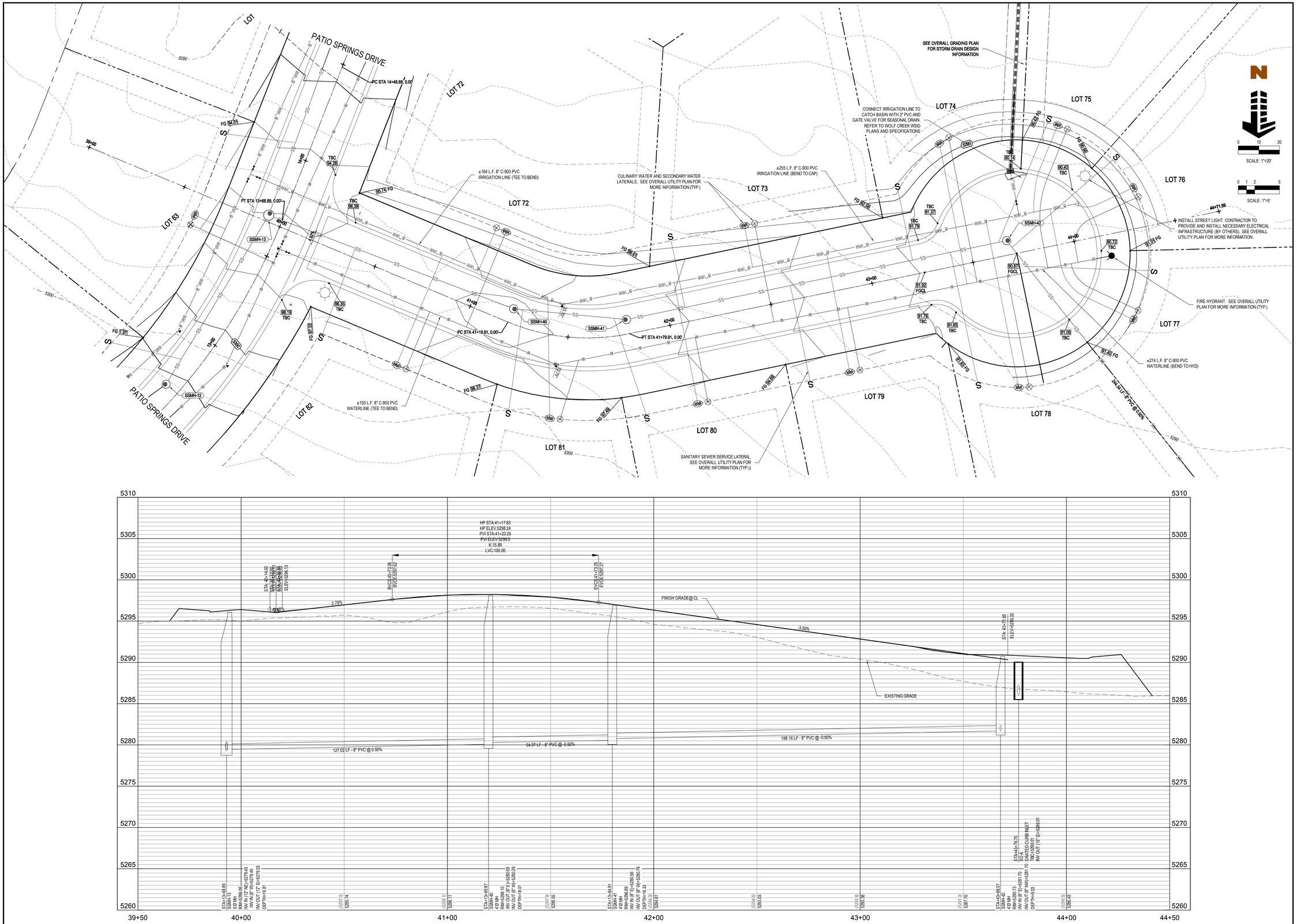

PROFILE ROAD 2: STA 39+50 T0 STA 44+50

Galloway
Planning. Architecture. Engineering.
Trolley Corners Building
515 South 700 East, Suite 3F
Salt Lake City, UT 84102
303.770.8884 O
www.gallowayUS.com

©2015. Galloway & Company, Inc. All Rights Reserved

Watts ENTERPRISES

LICENSED PROFESSIONAL ENGINEER
No. 275600
Richard M. Piggott
1-13-17
STATE OF UTAH

WATTS ENTERPRISES
FAIRWAYS AT WOLF CREEK
PHASE 4 & 5

EDEN, UTAH 84310

#	Date	Issue / Description	Init.

Project No:	WAT01.01
Drawn By:	JST
Checked By:	RMP
Date:	8/18/2016

PLAN & PROFILE

PP05

Sheet 11 of 29

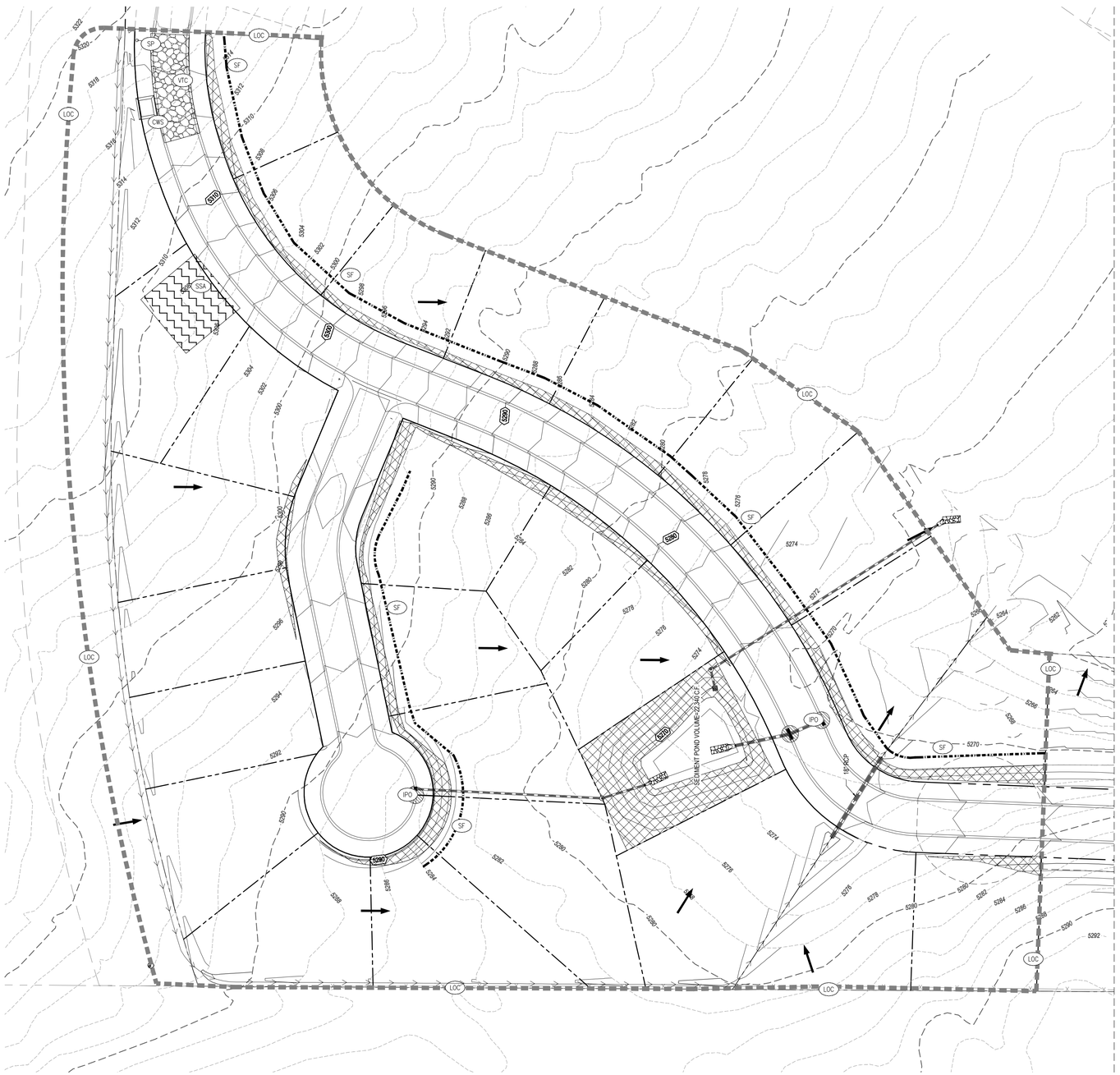

DIVERSION NOTE

CONTRACTOR SHALL ENSURE POSITIVE DRAINAGE ALONG ALL DIVERSIONS SO THAT FLOWS ARE CONVEYED TO SEDIMENT BASINS. THIS MAY REQUIRE SOME MINOR GRADE ADJUSTMENTS TO ENSURE POSITIVE DRAINAGE.

CONCRETE WASHOUT NOTE

CONCRETE WASHOUT MAY ONLY BE DISCHARGED ON-SITE INTO PORTABLE, IMPERMEABLE, BASINS. THE WASTE WATER AND CONCRETE RESIDUE WILL BE DISPOSED OF OFF-SITE IN ACCORDANCE WITH APPLICABLE STATE AND FEDERAL REGULATIONS.

DISTURBANCE NOTE

ALL AREAS TO BE SEEDED SHALL BE DONE WITH A NATIVE FAST GERMINATION SEED MIX THAT IS APPROVED BY THE ENGINEER. SEEDED AREAS SHALL BE PROTECTED WITH EITHER STRAW MULCH APPLIED AT A RATE OF 2 TONS PER ACRE AND CRIMPED IN, OR WITH EROSION CONTROL BLANKET COMPOSED OF COCONUT FIBER, AS CALLED OUT ON THIS SITE MAP.

STOCKPILE NOTE

ONLY ON-SITE MATERIALS DEEMED ACCEPTABLE FOR REUSE AS SUBGRADE BY THE GEOTECHNICAL CONSULTANT MAY BE STORED ON SITE. ALL OTHER EXCAVATED MATERIAL IS TO BE IMMEDIATELY TRUCKED OFF SITE FOR PROPER DISPOSAL. ANY ASPHALT AREAS USED FOR STOCKPILE MUST BE COVERED WITH A PROTECTIVE GEOTEXTILE. TARPAULINS MUST BE USED TO COVER SPOILS AT ALL TIMES OTHER THAN DURING IMMEDIATE ACCESS.

CAUTION - NOTICE TO CONTRACTOR

1. ALL UTILITY LOCATIONS SHOWN ARE BASED ON MAPS PROVIDED BY THE APPROPRIATE UTILITY COMPANY AND FIELD SURFACE EVIDENCE AT THE TIME OF SURVEY AND IS TO BE CONSIDERED AN APPROXIMATE LOCATION ONLY. IT IS THE CONTRACTOR'S RESPONSIBILITY TO FIELD VERIFY THE FIELD LOCATION OF ALL UTILITIES, PUBLIC OR PRIVATE, WHETHER SHOWN ON THE PLANS OR NOT, PRIOR TO CONSTRUCTION. REPORT ANY DISCREPANCIES TO THE ENGINEEER PRIOR TO CONSTRUCTION.
2. WHERE A PROPOSED UTILITY CROSSES AN EXISTING UTILITY, IT IS THE CONTRACTOR'S RESPONSIBILITY TO FIELD VERIFY THE HORIZONTAL AND VERTICAL LOCATION OF SUCH EXISTING UTILITY, EITHER THROUGH POTHOLING OR ALTERNATIVE METHOD. REPORT INFORMATION TO THE ENGINEER PRIOR TO CONSTRUCTION.

811 Know what's **below.** **Call** before you dig.

EROSION CONTROL LEGEND

	FLOW ARROW
LOC	LIMITS OF CONSTRUCTION
SF	SILT FENCE
CF	CONSTRUCTION FENCE
DD	DIVERSION DITCH/DIKE, INSTALL CHECK DAMS AS NOTED IN COA DETAIL
SSA	STABILIZED STAGING AREA
CWS	SMALL SITE CONCRETE WASHOUT AREA
TS	TEMPORARY STOCKPILE
VTC	VEHICLE TRACKING CONTROL
IPO	INLET PROTECTION
SP	SWMP SITE POSTING
SM	SEEDING AND MULCHING (REF. LANDSCAPE PLAN)
ECB	EROSION CONTROL BLANKET
SB	SEDIMENT BASIN
GS	GRAVEL SOCK
CD	CHECK DAM

MAINTENANCE NOTES

ALL MEASURES STATED ON THIS SITE MAP AND IN THE STORMWATER POLLUTION PREVENTION PLAN, SHALL BE MAINTAINED IN FULLY FUNCTIONAL CONDITION UNTIL NO LONGER REQUIRED FOR A COMPLETED PHASE OF WORK OR FINAL STABILIZATION OF THE SITE. ALL EROSION AND SEDIMENTATION CONTROL MEASURES SHALL BE CHECKED BY A QUALIFIED PERSON IN ACCORDANCE WITH THE CONTRACT DOCUMENTS OR THE APPLICABLE PERMIT, WHICHEVER IS MORE STRINGENT, AND REPAIRED IN ACCORDANCE WITH THE FOLLOWING:

1. INLET PROTECTION DEVICES AND BARRIERS SHALL BE REPAIRED OR REPLACED IF THEY SHOW SIGNS OF UNDERMINING, OR DETERIORATION.
2. ALL SEEDED AREAS SHALL BE CHECKED REGULARLY TO SEE THAT A GOOD STAND IS MAINTAINED. AREAS SHOULD BE FERTILIZED, WATERED AND RESEEDED AS NEEDED.
3. SILT FENCES/DIKES/FIBER FLOCCULENT TUBES SHALL BE REPAIRED TO THEIR ORIGINAL CONDITIONS IF DAMAGED. SEDIMENT SHALL BE REMOVED FROM THE SILT FENCES/DIKES/FIBER FLOCCULENT TUBES WHEN IT REACHES ONE-HALF THE HEIGHT OF THE SILT FENCE/DIKE/FIBER FLOCCULENT TUBES.
4. THE CONSTRUCTION EXITS SHALL BE MAINTAINED IN A CONDITION WHICH WILL PREVENT TRACKING OR FLOW OF MUD ONTO PUBLIC RIGHTS-OF-WAY. THIS MAY REQUIRE PERIODIC TOP DRESSING OF THE CONSTRUCTION EXITS AS CONDITIONS DEMAND.
5. THE TEMPORARY PARKING AND STORAGE AREA SHALL BE KEPT IN GOOD CONDITION (SUITABLE FOR PARKING AND STORAGE). THIS MAY REQUIRE PERIODIC TOP DRESSING OF THE TEMPORARY PARKING AS CONDITIONS DEMAND.
6. OUTLET STRUCTURES IN THE SEDIMENTATION BASINS SHALL BE MAINTAINED IN OPERATIONAL CONDITION AT ALL TIMES. SEDIMENT SHALL BE REMOVED FROM SEDIMENT BASINS OR TRAPS WHEN THE DESIGN CAPACITY HAS BEEN REDUCED BY 50%.
7. PRIOR TO LEAVING THE SITE, ALL VEHICLES SHALL BE CLEANED OF DEBRIS. ANY DEBRIS AND/OR SEDIMENT REACHING THE PUBLIC STREET SHALL BE CLEANED IMMEDIATELY BY A METHOD OTHER THAN FLUSHING.

GENERAL EROSION NOTES

A. CONTRACTOR SHALL IMPLEMENT BEST MANAGEMENT PRACTICES AS REQUIRED BY THE SWPPP. ADDITIONAL BEST MANAGEMENT PRACTICES SHALL BE IMPLEMENTED AS DICTATED BY CONDITIONS AT NO ADDITIONAL COST OF OWNER THROUGHOUT ALL PHASES OF CONSTRUCTION.

B. BEST MANAGEMENT PRACTICES (BMP'S) AND CONTROLS SHALL CONFORM TO FEDERAL, STATE, OR LOCAL REQUIREMENTS OR MANUAL OF PRACTICE, AS APPLICABLE. CONTRACTOR SHALL IMPLEMENT ADDITIONAL CONTROLS AS DIRECTED BY PERMITTING AGENCY OR OWNER.

C. SITE MAP MUST CLEARLY DELINEATE ALL STATE WATERS. PERMITS FOR ANY CONSTRUCTION ACTIVITY IMPACTING STATE WATERS OR REGULATED WETLANDS MUST BE MAINTAINED ON SITE AT ALL TIMES.

D. CONTRACTOR TO LIMIT DISTURBANCE OF SITE IN STRICT ACCORDANCE WITH EROSION CONTROL SEQUENCING SHOWN ON THIS PLAN, OR AS REQUIRED BY THE APPLICABLE GENERAL PERMIT. NO UNNECESSARY OR IMPROPERLY SEQUENCED CLEARING AND/OR GRADING SHALL BE PERMITTED.

E. GENERAL CONTRACTOR SHALL DENOTE ON PLAN THE TEMPORARY PARKING AND STORAGE AREA WHICH SHALL ALSO BE USED AS THE EQUIPMENT MAINTENANCE AND CLEANING AREA, EMPLOYEE PARKING AREA, AND AREA FOR LOCATING PORTABLE FACILITIES, OFFICE TRAILERS, AND TOILET FACILITIES. CONTRACTOR SHALL CONSTRUCT TEMPORARY BERM ON DOWN STREAM SIDES.

F. ALL WASH WATER (CONCRETE TRUCKS, VEHICLE CLEANING, EQUIPMENT CLEANING, ETC.) SHALL BE DETAINED AND PROPERLY TREATED OR DISPOSED.

G. SUFFICIENT OIL AND GREASE ABSORBING MATERIALS AND FLOATATION BOOMS SHALL BE MAINTAINED ON SITE OR READILY AVAILABLE TO CONTAIN AND CLEAN-UP FUEL OR CHEMICAL SPILLS AND LEAKS.

H. DUST ON THE SITE SHALL BE MINIMIZED. THE USE OF MOTOR OILS AND OTHER PETROLEUM BASED OR TOXIC LIQUIDS FOR DUST SUPPRESSION OPERATIONS IS PROHIBITED.

I. RUBBISH, TRASH, GARBAGE, LITTER, OR OTHER SUCH MATERIALS SHALL BE DEPOSITED INTO SEALED CONTAINERS. MATERIALS SHALL BE PREVENTED FROM LEAVING THE PREMISES THROUGH THE ACTION OF WIND OR STORMWATER DISCHARGE INTO DRAINAGE DITCHES OR WATERS OF THE STATE.

J. ALL DENUDED/BARE AREAS THAT WILL BE INACTIVE FOR 14 DAYS OR MORE, MUST BE STABILIZED IMMEDIATELY UPON COMPLETION OF MOST RECENT GRADING ACTIVITY. WITH THE USE OF FAST-GERMINATING ANNUAL GRASS/GRAIN VARIETIES, STRAW/HAY MULCH, WOOD CELLULOSE FIBERS, TACKIFIERS, NETTING OR BLANKETS.

K. DISTURBED PORTIONS OF THE SITE WHERE CONSTRUCTION ACTIVITY HAS PERMANENTLY STOPPED SHALL BE PERMANENTLY STABILIZED AS SHOWN ON THE PLANS. THESE AREAS SHALL BE SEEDED, SODDED, AND/OR VEGETATED IMMEDIATELY, AND NO LATER THAN 14 DAYS AFTER THE LAST CONSTRUCTION ACTIVITY OCCURRING IN THESE AREAS. REFER TO THE GRADING PLAN AND/OR THE LANDSCAPE PLAN.

L. IF THE ACTION OF VEHICLES TRAVELING OVER THE CONSTRUCTION ENTRANCES IS NOT SUFFICIENT TO PREVENT TRACKING OF DIRT, DUST OR MUD, THEN THE TIRES MUST BE WASHED BEFORE THE VEHICLES ENTER A PUBLIC ROAD. PROVISIONS MUST BE MADE TO INTERCEPT THE WASH WATER AND TRAP THE SEDIMENT BEFORE IT IS CARRIED OFF THE SITE. ONLY USE INGRESS/EGRESS LOCATIONS AS PROVIDED.

M. ALL MATERIALS SPILLED, DROPPED, WASHED, OR TRACKED FROM VEHICLES ONTO ROADWAYS OR INTO STORM DRAINS MUST BE REMOVED IMMEDIATELY.

N. CONTRACTORS OR SUBCONTRACTORS WILL BE RESPONSIBLE FOR REMOVING SEDIMENT ANY SEDIMENT THAT MAY HAVE COLLECTED IN THE STORM SEWER DRAINAGE SYSTEMS IN CONJUNCTION WITH THE STABILIZATION OF THE SITE.

O. ON-SITE & OFFSITE SOIL STOCKPILE AND BORROW AREAS SHALL BE PROTECTED FROM EROSION AND SEDIMENTATION THROUGH IMPLEMENTATION OF BEST MANAGEMENT PRACTICES. STOCKPILE AND BORROW AREA LOCATIONS SHALL BE NOTED ON THE SITE MAP AND PERMITTED IN ACCORDANCE WITH GENERAL PERMIT REQUIREMENTS.

P. SLOPES SHALL BE LEFT IN A ROUGHENED CONDITION DURING THE GRADING PHASE TO REDUCE RUNOFF VELOCITIES AND EROSION.

Q. DUE TO THE GRADE CHANGES DURING THE DEVELOPMENT OF THE PROJECT, THE CONTRACTOR SHALL BE RESPONSIBLE FOR ADJUSTING THE EROSION AND SEDIMENT CONTROL MEASURES (SILT FENCES, ETC.) TO PREVENT EROSION AND POLLUTANT DISCHARGE.

R. GENERAL CONTRACTOR IS TO DESIGNATE/IDENTIFY AREAS ON THE SITE MAPS, INSIDE OF THE LIMITS OF DISTURBANCE, FOR WASTE DISPOSAL AND DELIVERY AND MATERIAL STORAGE.

BEST MANAGEMENT PRACTICES SEQUENCE

NOTE: UPON IMPLEMENTATION AND INSTALLATION OF THE FOLLOWING AREAS: TRAILER, PARKING, LAY DOWN, PORTA-POTTY, WHEEL WASH, CONCRETE WASHOUT, MASON'S AREA, FUEL AND MATERIAL STORAGE CONTAINERS, SOLID WASTE CONTAINERS, ETC., IMMEDIATELY DENOTE THEM ON THE SITE MAPS AND NOTE ANY CHANGES IN LOCATION AS THEY OCCUR THROUGHOUT THE CONSTRUCTION PROCESS. IN ADDITION, NOTE ALL AREAS WHERE FILL IS IMPORTED FROM OR SOIL IS EXPORTED TO ON THE SITE MAPS.

PHASE I

1. INSTALL VEHICLE TRACKING CONTROL.
2. INSTALL SILT FENCE(S) ON THE SITE (CLEAR ONLY THOSE AREAS NECESSARY TO INSTALL SILT FENCE).

HALT ALL ACTIVITIES AND CONTACT THE ENGINEER TO PERFORM INSPECTION AND CERTIFICATION OF BMPS. GENERAL CONTRACTOR SHALL SCHEDULE AND CONDUCT THE STORMWATER PRE-CONSTRUCTION MEETING WITH THE ENGINEER, AGENCY(IES) AND GROUND-DISTURBING CONTRACTORS BEFORE PROCEEDING WITH CONSTRUCTION.

3. INSTALL SEDIMENT TRAPS.
4. PREPARE TEMPORARY PARKING AND STORAGE AREA.
5. BEGIN CLEARING, DEMOLITION AND GRUBBING THE SITE.
6. BEGIN GRADING THE SITE.
7. START CONSTRUCTION OF BUILDING PAD AND STRUCTURES.

PHASE II

1. TEMPORARILY SEED, THROUGHOUT CONSTRUCTION, DENUDED AREAS THAT WILL BE INACTIVE FOR 14 DAYS OR MORE.
2. INSTALL UTILITIES, UNDERDRAINS, CURBS AND GUTTERS.
3. PERMANENTLY STABILIZE AREAS TO BE VEGETATED AS THEY ARE BROUGHT TO FINAL GRADE.
4. PREPARE SITE FOR PAVING.
5. PAVE SITE.
6. COMPLETE GRADING AND INSTALLATION OF PERMANENT STABILIZATION OVER ALL AREAS INCLUDING OUT LOTS.

NOTE: THE GENERAL CONTRACTOR MAY COMPLETE CONSTRUCTION-RELATED ACTIVITIES CONCURRENTLY ONLY IF ALL PRECEDING BMPS HAVE BEEN COMPLETELY INSTALLED. BMP-RELATED STEPS IN THE ABOVE SEQUENCE ARE ITALICIZED FOR CLARITY.

THE ACTUAL SCHEDULE FOR IMPLEMENTING POLLUTANT CONTROL MEASURES WILL BE DETERMINED BY PROJECT CONSTRUCTION PROGRESS AND RECORDED BY THE GENERAL CONTRACTOR. DOWN SLOPE PROTECTIVE MEASURES MUST ALWAYS BE IN PLACE BEFORE SOIL IS DISTURBED.

Galloway
Planning. Architecture. Engineering.
Trolley Corners Building
515 South 700 East, Suite 3F
Salt Lake City, UT 84102
303.770.8884 O
www.gallowayUS.com
©2015. Galloway & Company, Inc. All Rights Reserved

Watts ENTERPRISES

LICENSED PROFESSIONAL ENGINEER No. 275600 Richard M. Piggott 1/13/17 STATE OF UTAH

WATTS ENTERPRISES
FAIRWAYS AT WOLF CREEK
PHASE 4 & 5

EDEN, UTAH 84310

#	Date	Issue / Description	Init.

Project No:	WAT01.01
Drawn By:	JST
Checked By:	RMP
Date:	1/12/2017

EROSION CONTROL PLAN

EC01

Sheet 12 of 29

GENERAL EROSION NOTES

A. CONTRACTOR SHALL IMPLEMENT BEST MANAGEMENT PRACTICES AS REQUIRED BY THE SWPPP. ADDITIONAL BEST MANAGEMENT PRACTICES SHALL BE IMPLEMENTED AS DICTATED BY CONDITIONS AT NO ADDITIONAL COST OF OWNER THROUGHOUT ALL PHASES OF CONSTRUCTION.

B. BEST MANAGEMENT PRACTICES (BMPS) AND CONTROLS SHALL CONFORM TO FEDERAL, STATE, OR LOCAL REQUIREMENTS OR MANUAL OF PRACTICE, AS APPLICABLE. CONTRACTOR SHALL IMPLEMENT ADDITIONAL CONTROLS AS DIRECTED BY PERMITTING AGENCY OR OWNER.

C. SITE MAP MUST CLEARLY DELINEATE ALL STATE WATERS. PERMITS FOR ANY CONSTRUCTION ACTIVITY IMPACTING STATE WATERS OR REGULATED WETLANDS MUST BE MAINTAINED ON SITE AT ALL TIMES.

D. CONTRACTOR TO LIMIT DISTURBANCE OF SITE IN STRICT ACCORDANCE WITH EROSION CONTROL SEQUENCING SHOWN ON THIS PLAN, OR AS REQUIRED BY THE APPLICABLE GENERAL PERMIT. NO UNNECESSARY OR IMPROPERLY SEQUENCED CLEARING AND/OR GRADING SHALL BE PERMITTED.

E. GENERAL CONTRACTOR SHALL DENOTE ON PLAN THE TEMPORARY PARKING AND STORAGE AREA WHICH SHALL ALSO BE USED AS THE EQUIPMENT MAINTENANCE AND CLEANING AREA, EMPLOYEE PARKING AREA, AND AREA FOR LOCATING PORTABLE FACILITIES, OFFICE TRAILERS, AND TOILET FACILITIES. CONTRACTOR SHALL CONSTRUCT TEMPORARY BERM ON DOWN STREAM SIDES.

F. ALL WASH WATER (CONCRETE TRUCKS, VEHICLE CLEANING, EQUIPMENT CLEANING, ETC.) SHALL BE DETAINED AND PROPERLY TREATED OR DISPOSED.

G. SUFFICIENT OIL AND GREASE ABSORBING MATERIALS AND FLOATATION BOOMS SHALL BE MAINTAINED ON SITE OR READILY AVAILABLE TO CONTAIN AND CLEAN-UP FUEL OR CHEMICAL SPILLS AND LEAKS.

H. DUST ON THE SITE SHALL BE MINIMIZED. THE USE OF MOTOR OILS AND OTHER PETROLEUM BASED OR TOXIC LIQUIDS FOR DUST SUPPRESSION OPERATIONS IS PROHIBITED.

I. RUBBISH, TRASH, GARBAGE, LITTER, OR OTHER SUCH MATERIALS SHALL BE DEPOSITED INTO SEALED CONTAINERS. MATERIALS SHALL BE PREVENTED FROM LEAVING THE PREMISES THROUGH THE ACTION OF WIND OR STORMWATER DISCHARGE INTO DRAINAGE DITCHES OR WATERS OF THE STATE.

J. ALL DENUDED/BARE AREAS THAT WILL BE INACTIVE FOR 14 DAYS OR MORE, MUST BE STABILIZED IMMEDIATELY UPON COMPLETION OF MOST RECENT GRADING ACTIVITY, WITH THE USE OF FAST-GERMINATING ANNUAL GRASS/GRAIN VARIETIES, STRAW/HAY MULCH, WOOD CELLULOSE FIBERS, TACKIFIERS, NETTING OR BLANKETS.

K. DISTURBED PORTIONS OF THE SITE WHERE CONSTRUCTION ACTIVITY HAS PERMANENTLY STOPPED SHALL BE PERMANENTLY STABILIZED AS SHOWN ON THE PLANS. THESE AREAS SHALL BE SEEDED, SODDED, AND/OR VEGETATED IMMEDIATELY, AND NO LATER THAN 14 DAYS AFTER THE LAST CONSTRUCTION ACTIVITY OCCURRING IN THESE AREAS. REFER TO THE GRADING PLAN AND/OR THE LANDSCAPE PLAN

L. IF THE ACTION OF VEHICLES TRAVELING OVER THE CONSTRUCTION ENTRANCES IS NOT SUFFICIENT TO PREVENT TRACKING OF DIRT, DUST OR MUD, THEN THE TIRES MUST BE WASHED BEFORE THE VEHICLES ENTER A PUBLIC ROAD. PROVISIONS MUST BE MADE TO INTERCEPT THE WASH WATER AND TRAP THE SEDIMENT BEFORE IT IS CARRIED OFF THE SITE. ONLY USE INGRESS/EGRESS LOCATIONS AS PROVIDED.

M. ALL MATERIALS SPILLED, DROPPED, WASHED, OR TRACKED FROM VEHICLES ONTO ROADWAYS OR INTO STORM DRAINS MUST BE REMOVED IMMEDIATELY.

N. CONTRACTORS OR SUBCONTRACTORS WILL BE RESPONSIBLE FOR REMOVING SEDIMENT ANY SEDIMENT THAT MAY HAVE COLLECTED IN THE STORM SEWER DRAINAGE SYSTEMS IN CONJUNCTION WITH THE STABILIZATION OF THE SITE.

O. ON-SITE & OFFSITE SOIL STOCKPILE AND BORROW AREAS SHALL BE PROTECTED FROM EROSION AND SEDIMENTATION THROUGH IMPLEMENTATION OF BEST MANAGEMENT PRACTICES. STOCKPILE AND BORROW AREA LOCATIONS SHALL BE NOTED ON THE SITE MAP AND PERMITTED IN ACCORDANCE WITH GENERAL PERMIT REQUIREMENTS.

P. SLOPES SHALL BE LEFT IN A ROUGHENED CONDITION DURING THE GRADING PHASE TO REDUCE RUNOFF VELOCITIES AND EROSION.

Q. DUE TO THE GRADE CHANGES DURING THE DEVELOPMENT OF THE PROJECT, THE CONTRACTOR SHALL BE RESPONSIBLE FOR PREVENTING THE EROSION AND SEDIMENT CONTROL MEASURES (SILT FENCES, ETC.) TO PREVENT EROSION AND POLLUTANT DISCHARGE.

R. GENERAL CONTRACTOR IS TO DESIGNATE/IDENTIFY AREAS ON THE SITE MAPS, INSIDE OF THE LIMITS OF DISTURBANCE, FOR WASTE DISPOSAL AND DELIVERY AND MATERIAL STORAGE.

MAINTENANCE NOTES

ALL MEASURES STATED ON THIS SITE MAP AND IN THE STORMWATER POLLUTION PREVENTION PLAN, SHALL BE MAINTAINED IN FULLY FUNCTIONAL CONDITION UNTIL NO LONGER REQUIRED FOR A COMPLETED PHASE OF WORK OR FINAL STABILIZATION OF THE SITE. ALL EROSION AND SEDIMENTATION CONTROL MEASURES SHALL BE CHECKED BY A QUALIFIED PERSON IN ACCORDANCE WITH THE CONTRACT DOCUMENTS OR THE APPLICABLE PERMIT, WHICHEVER IS MORE STRINGENT, AND REPAIRED IN ACCORDANCE WITH THE FOLLOWING:

1. INLET PROTECTION DEVICES AND BARRIERS SHALL BE REPAIRED OR REPLACED IF THEY SHOW SIGNS OF UNDERMINING, OR DETERIORATION.
2. ALL SEEDED AREAS SHALL BE CHECKED REGULARLY TO SEE THAT A GOOD STAND IS MAINTAINED. AREAS SHOULD BE FERTILIZED, WATERED AND RESEEDED AS NEEDED.
3. SILT FENCES/DIKES/FIBER FLOCCULENT TUBES SHALL BE REPAIRED TO THEIR ORIGINAL CONDITIONS IF DAMAGED. SEDIMENT SHALL BE REMOVED FROM THE SILT FENCES/DIKES/FIBER FLOCCULENT TUBES WHEN IT REACHES ONE-HALF THE HEIGHT OF THE SILT FENCE/DIKE/FIBER FLOCCULENT TUBES.
4. THE CONSTRUCTION EXITS SHALL BE MAINTAINED IN A CONDITION WHICH WILL PREVENT TRACKING OR FLOW OF MUD ONTO PUBLIC RIGHTS-OF-WAY. THIS MAY REQUIRE PERIODIC TOP DRESSING OF THE CONSTRUCTION EXITS AS CONDITIONS DEMAND.
5. THE TEMPORARY PARKING AND STORAGE AREA SHALL BE KEPT IN GOOD CONDITION (SUITABLE FOR PARKING AND STORAGE). THIS MAY REQUIRE PERIODIC TOP DRESSING OF THE TEMPORARY PARKING AS CONDITIONS DEMAND.
6. OUTLET STRUCTURES IN THE SEDIMENTATION BASINS SHALL BE MAINTAINED IN OPERATIONAL CONDITION AT ALL TIMES. SEDIMENT SHALL BE REMOVED FROM SEDIMENT BASINS OR TRAPS WHEN THE DESIGN CAPACITY HAS BEEN REDUCED BY 50%.
7. PRIOR TO LEAVING THE SITE, ALL VEHICLES SHALL BE CLEANED OF DEBRIS. ANY DEBRIS AND/OR SEDIMENT REACHING THE PUBLIC STREET SHALL BE CLEANED IMMEDIATELY BY A METHOD OTHER THAN FLUSHING.

N

0 25 50

SCALE: 1"=50'

DIVERSION NOTE

CONTRACTOR SHALL ENSURE POSITIVE DRAINAGE ALONG ALL DIVERSIONS SO THAT FLOWS ARE CONVEYED TO SEDIMENT BASINS. THIS MAY REQUIRE SOME MINOR GRADE ADJUSTMENTS TO ENSURE POSITIVE DRAINAGE.

CONCRETE WASHOUT NOTE

CONCRETE WASHOUT MAY ONLY BE DISCHARGED ON-SITE INTO PORTABLE, IMPERMEABLE, BASINS. THE WASTE WATER AND CONCRETE RESIDUE WILL BE DISPOSED OF OFF-SITE IN ACCORDANCE WITH APPLICABLE STATE AND FEDERAL REGULATIONS.

DISTURBANCE NOTE

ALL AREAS TO BE SEEDED SHALL BE DONE WITH A NATIVE FAST GERMINATION SEED MIX THAT IS APPROVED BY THE ENGINEER. SEEDED AREAS SHALL BE PROTECTED WITH EITHER STRAW MULCH APPLIED AT A RATE OF 2 TONS PER ACRE AND CRIMPED IN, OR WITH EROSION CONTROL BLANKET COMPOSED OF COCONUT FIBER, AS CALLED OUT ON THIS SITE MAP.

STOCKPILE NOTE

ONLY ON-SITE MATERIALS DEEMED ACCEPTABLE FOR REUSE AS SUBGRADE BY THE GEOTECHNICAL CONSULTANT MAY BE STORED ON SITE. ALL OTHER EXCAVATED MATERIAL IS TO BE IMMEDIATELY TRUCKED OFF SITE FOR PROPER DISPOSAL. ANY ASPHALT AREAS USED FOR STOCKPILE MUST BE COVERED WITH A PROTECTIVE GEOTEXTILE. TARPAULINS MUST BE USED TO COVER SPOILS AT ALL TIMES OTHER THAN DURING IMMEDIATE ACCESS.

CAUTION - NOTICE TO CONTRACTOR

1. ALL UTILITY LOCATIONS SHOWN ARE BASED ON MAPS PROVIDED BY THE APPROPRIATE UTILITY COMPANY AND FIELD SURFACE EVIDENCE AT THE TIME OF SURVEY AND IS TO BE CONSIDERED AN APPROXIMATE LOCATION ONLY. IT IS THE CONTRACTOR'S RESPONSIBILITY TO FIELD VERIFY THE FIELD LOCATION OF ALL UTILITIES, PUBLIC OR PRIVATE, WHETHER SHOWN ON THE PLANS OR NOT, PRIOR TO CONSTRUCTION. REPORT ANY DISCREPANCIES TO THE ENGINEER PRIOR TO CONSTRUCTION.
2. WHERE A PROPOSED UTILITY CROSSES AN EXISTING UTILITY, IT IS THE CONTRACTOR'S RESPONSIBILITY TO FIELD VERIFY THE HORIZONTAL AND VERTICAL LOCATION OF SUCH EXISTING UTILITY, EITHER THROUGH POTHOLING OR ALTERNATIVE METHOD. REPORT INFORMATION TO THE ENGINEER PRIOR TO CONSTRUCTION.

811 Know what's **below.** **Call** before you dig.

EROSION CONTROL LEGEND

	FLOW ARROW
LOC	LIMITS OF CONSTRUCTION
SF	SILT FENCE
CF	CONSTRUCTION FENCE
DD	DIVERSION DITCH/DIKE, INSTALL CHECK DAMS AS NOTED IN COA DETAIL
SSA	STABILIZED STAGING AREA
CWS	SMALL SITE CONCRETE WASHOUT AREA
TS	TEMPORARY STOCKPILE
VTC	VEHICLE TRACKING CONTROL
IPO	INLET PROTECTION
SP	SWPPP SITE POSTING
SM	SEEDING AND MULCHING (REF. LANDSCAPE PLAN)
ECB	EROSION CONTROL BLANKET
SB	SEDIMENT BASIN

BEST MANAGEMENT PRACTICES SEQUENCE

NOTE: UPON IMPLEMENTATION AND INSTALLATION OF THE FOLLOWING AREAS: TRAILER, PARKING, LAY DOWN, PORTA-POTTY, WHEEL WASH, CONCRETE WASHOUT, MASONS AREA, FUEL AND MATERIAL STORAGE CONTAINERS, SOLID WASTE CONTAINERS, ETC., IMMEDIATELY DENOTE THEM ON THE SITE MAPS AND NOTE ANY CHANGES IN LOCATION AS THEY OCCUR THROUGHOUT THE CONSTRUCTION PROCESS. IN ADDITION, NOTE ALL AREAS WHERE FILL IS IMPORTED FROM OR SOIL IS EXPORTED TO ON THE SITE MAPS.

PHASE I

1. INSTALL VEHICLE TRACKING CONTROL.
2. INSTALL SILT FENCE(S) ON THE SITE (CLEAR ONLY THOSE AREAS NECESSARY TO INSTALL SILT FENCE).
3. INSTALL DIVERSION SWALES AND ASSOCIATED CHECK DAMS.

   HALT ALL ACTIVITIES AND CONTACT THE ENGINEER TO PERFORM INSPECTION AND CERTIFICATION OF BMPS. GENERAL CONTRACTOR SHALL SCHEDULE AND CONDUCT THE STORMWATER PRE-CONSTRUCTION MEETING WITH THE ENGINEER, AGENCY(IES) AND GROUND-DISTURBING CONTRACTORS BEFORE PROCEEDING WITH CONSTRUCTION.

4. INSTALL SEDIMENT TRAPS.
5. PREPARE TEMPORARY PARKING AND STORAGE AREA.
6. BEGIN CLEARING, DEMOLITION AND GRUBBING THE SITE.
7. BEGIN GRADING THE SITE.
8. START CONSTRUCTION OF BUILDING PAD AND STRUCTURES.

PHASE II

1. TEMPORARILY SEED, THROUGHOUT CONSTRUCTION, DENUDED AREAS THAT WILL BE INACTIVE FOR 14 DAYS OR MORE.
2. INSTALL UTILITIES, UNDERDRAINS, CURBS AND GUTTERS.
3. PERMANENTLY STABILIZE AREAS TO BE VEGETATED AS THEY ARE BROUGHT TO FINAL GRADE.
4. PREPARE SITE FOR PAVING.
5. PAVE SITE.
6. COMPLETE GRADING AND INSTALLATION OF PERMANENT STABILIZATION OVER ALL AREAS INCLUDING OUT LOTS.

NOTE: THE GENERAL CONTRACTOR MAY COMPLETE CONSTRUCTION-RELATED ACTIVITIES CONCURRENTLY ONLY IF ALL PRECEDING BMPS HAVE BEEN COMPLETELY INSTALLED. BMP-RELATED STEPS IN THE ABOVE SEQUENCE ARE ITALICIZED FOR CLARITY.

THE ACTUAL SCHEDULE FOR IMPLEMENTING POLLUTANT CONTROL MEASURES WILL BE DETERMINED BY PROJECT CONSTRUCTION PROGRESS AND RECORDED BY THE GENERAL CONTRACTOR. DOWN SLOPE PROTECTIVE MEASURES MUST ALWAYS BE IN PLACE BEFORE SOIL IS DISTURBED.

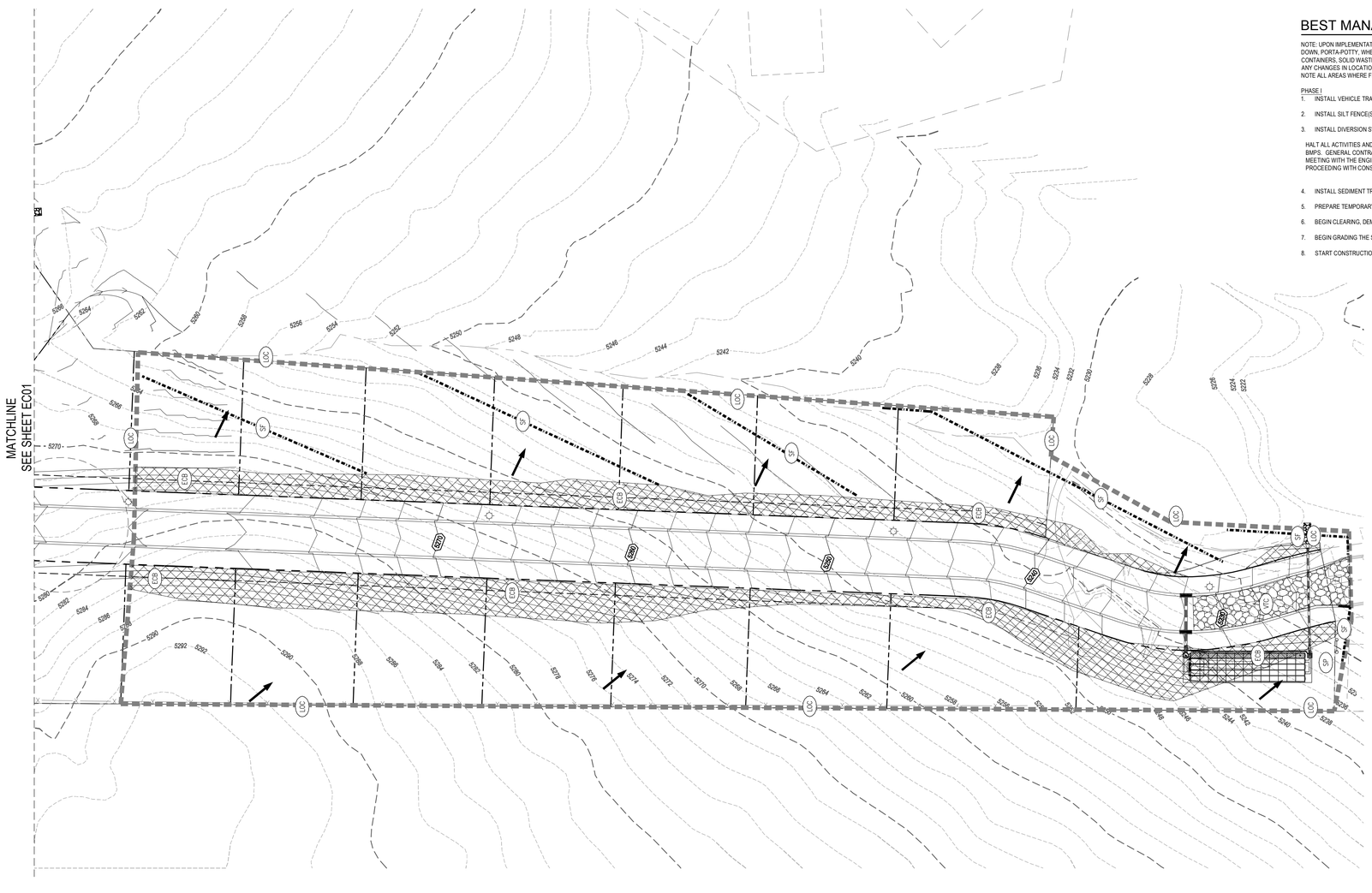

Galloway
Planning. Architecture. Engineering.
Trolley Corners Building
515 South 700 East, Suite 3F
Salt Lake City, UT 84102
303.770.8884 O
www.gallowayUS.com

©2015. Galloway & Company, Inc. All Rights Reserved

Watts ENTERPRISES

LICENSED PROFESSIONAL ENGINEER No. 275600 Richard M. Pignotti 1-12-17 STATE OF UTAH

WATTS ENTERPRISES
FAIRWAYS AT WOLF CREEK
PHASE 4 & 5

EDEN, UTAH 84310

#	Date	Issue / Description	Init.

Project No:	WAT01.01
Drawn By:	JST
Checked By:	RMP
Date:	1/12/2017

EROSION CONTROL PLAN

EC02

Straw bale barrier

1. **GENERAL**
   A. Description. A temporary sediment barrier consisting of a row of entrenched and anchored straw bales.
   B. Purpose. To intercept and detain small amounts of sediment from disturbed areas of limited extent. To decrease the velocity of sheet flows and low-to-moderate level channel flows.

2. **PRODUCTS** (Not used)

3. **EXECUTION**
   A. Place bales in a single row, lengthwise with ends of adjacent bales tightly abutting each other for the following conditions.
      1) Perimeter Control. Place barrier at down gradient limits of disturbance.
      2) Sediment Barrier. Place barrier at toe of slope or soil stockpile.
      3) Protection of Existing Waterways. Place barrier at top of stream bank.
      4) Inlet Protection.
   B. Wire-bound or string-tie all bales. Install so straw bale bindings are oriented around the sides rather than along the tops and bottoms of the bales (in order to prevent deterioration of the bindings).
   C. Chink the gaps between bales (filled by wedging) with straw to prevent water from escaping between the bales. Loose straw scattered over the area immediately uphill from a straw bale barrier tends to increase barrier efficiency.
   D. When bales are installed at the toe of a slope, place the bales away from the slope for increased storage capacity.
   E. Remove straw bale barriers when they have served their usefulness, but not before the up-slope areas have been permanently stabilized.
   F. Maintenance.
      1) Inspect immediately after any rainfall and at least daily during prolonged rainfall.
      2) Pay close attention to the repair of damaged bales, end runs and undercutting beneath bales.
      3) Necessary repairs or replacement of bales must be accomplished promptly.
      4) Remove sediment deposits after each rainfall. It must be removed when the level of deposition reaches approximately one-half the height of the bale(s).
      5) Realign bales to provide a continuous barrier and to fill gaps.
      6) Recompact soil around bales as necessary to prevent piping.

4

NARRATIVE: THIS PLAN MAY BE USED FOR THE CONSTRUCTION OF A STORM WATER BEST MANAGEMENT PRACTICE (BMP). IT IS NOT INCLUSIVE OF ALL PRACTICES AVAILABLE AND IS ONLY SPECIFIC TO THE CONSTRUCTION OF THIS TYPE. MAINTENANCE OF THIS TYPE OF INSTALLATION IS IMPORTANT AND SHOULD BE CONTINUOUSLY MONITORED BY THE CONTRACTOR AND ENGINEER. DETAILS SHOWN HERE HIGHLIGHT IMPORTANT PARTS OF CONSTRUCTION, AND SHOULD BE MODIFIED AS NEEDED.

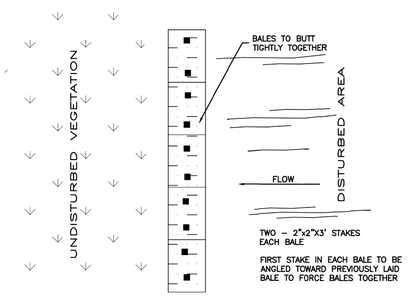

PLAN

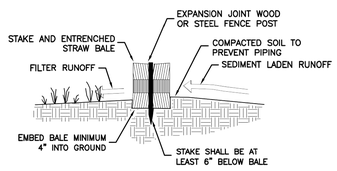

SECTION

Straw bale barrier Plan **121**

Frbruary 2006 5

Silt fence

1. **GENERAL**
   A. Description. A temporary sediment barrier consisting of a filter fabric stretched across and attached to supporting posts and entrenched.
   B. Application. To intercept sediment from disturbed areas of limited extent.
   C. Perimeter Control: Place barrier at down gradient limits of disturbance.
   D. Sediment Barrier: Place barrier at toe of slope or soil stockpile.
   E. Protection of Existing Waterways: Place barrier at top of stream bank.
   F. Inlet Protection.

2. **PRODUCTS**
   A. Fabric. Synthetic filter fabric shall be a pervious sheet of propylene, nylon, polyester, or polyethylene yarn. Synthetic filter fabric shall contain ultraviolet ray inhibitors and stabilizers to provide a minimum of 6 months of expected usable construction life at a temperature range of 0 deg F to 120 deg F.
   B. Burlap. 10 ounces per square yard of fabric.
   C. Posts. Either 2" x 4" diameter wood, or 1.33 pounds per linear foot steel with a minimum length of 5 feet, or steel posts with projections for fastening wire to them.

3. **EXECUTION**
   A. Cut the fabric on site to desired width, unroll, and drape over the barrier. Secure the fabric toe with rocks or dirt and secure the fabric to the mesh with twin, staples or similar devices.
   B. When attaching two silt fences together, place the end post of the second fence inside the end post of the first fence. Rotate both posts at least 180 degrees on a clockwise direction to create a tight seal with the filter fabric. Drive both posts into the ground and bury the flap.
   C. When used to control sediments from a steep slope, place silt fences away from the toe of the slope for increased holding capacity.
   D. Maintenance.
      1) Inspect immediately after each rainfall and at least daily during prolonged rainfall.
      2) Should the fabric on a silt fence or filter barrier decompose or become ineffective before the end of the expected usable life and the barrier still be necessary, replace the fabric promptly.
      3) Remove sediment deposits after each storm event. They must be removed when deposits reach approximately one-half the height of the barrier.
      4) Re-anchor fence as necessary to prevent shortcutting.
      5) Inspect for runoff bypassing ends of barriers or undercutting barriers.

6

NARRATIVE: THIS PLAN MAY BE USED FOR THE CONSTRUCTION OF A STORM WATER BEST MANAGEMENT PRACTICE (BMP). IT IS NOT INCLUSIVE OF ALL PRACTICES AVAILABLE AND IS ONLY SPECIFIC TO THE CONSTRUCTION OF THIS TYPE. MAINTENANCE OF THIS TYPE OF INSTALLATION IS IMPORTANT AND SHOULD BE CONTINUOUSLY MONITORED BY THE CONTRACTOR AND ENGINEER. DETAILS SHOWN HERE HIGHLIGHT IMPORTANT PARTS OF CONSTRUCTION, AND SHOULD BE MODIFIED AS NEEDED.

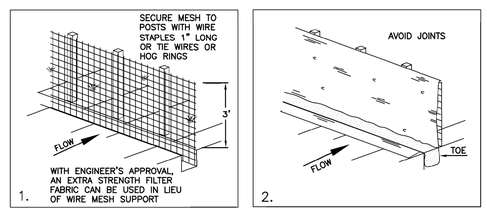

INSTALLATION SEQUENCE

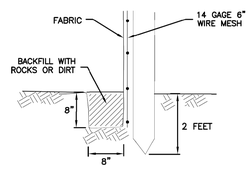

TOE DETAIL

Silt fence Plan **122**

February 2006 7

Diversion dike

1. **GENERAL**
   A. Description: A temporary ridge of compacted soil located at the top or base of a sloping disturbed area.
   B. Purpose. To intercept up gradient runoff and convey around construction site and to divert sediment laden runoff.

2. **PRODUCT** (Not used)

3. **EXECUTION**
   A. Construct.
      1) Along midpoint of construction slope to intercept runoff and channel to controlled discharge point.
      2) Around base of soil stockpiles to capture sediment.
      3) Around perimeter of disturbed areas to capture sediment.
   B. Locate the dike to minimize damages by construction operations and traffic.
   C. Clear and grub area for dike construction. Build the dike before construction begins.
   D. Excavate channel and place soil on down gradient side.
   E. Shape and machine compact excavated soil to form ridge.
   F. Place erosion protection (rip rap, mulch) at outlet. Stabilize channel and ridge as required with mulch, gravel or vegetative cover. Temporary or permanent seeding and mulch shall be applied to the dike within 15 days of construction.
   G. Maintenance.
      1) Inspect immediately after each rainfall and at least daily during prolonged rainfall.
      2) Look for runoff breaching dike or eroding channel or side slopes.
      3) Check discharge point for erosion or bypassing of flows.
      4) Repair and stabilize as necessary.
      5) Inspect daily during vehicular activity on slope, check for and repair any traffic damage.

8

NARRATIVE: THIS PLAN MAY BE USED FOR THE CONSTRUCTION OF A STORM WATER BEST MANAGEMENT PRACTICE (BMP). IT IS NOT INCLUSIVE OF ALL PRACTICES AVAILABLE AND IS ONLY SPECIFIC TO THE CONSTRUCTION OF THIS TYPE. MAINTENANCE OF THIS TYPE OF INSTALLATION IS IMPORTANT AND SHOULD BE CONTINUOUSLY MONITORED BY THE CONTRACTOR AND ENGINEER. DETAILS SHOWN HERE HIGHLIGHT IMPORTANT PARTS OF CONSTRUCTION, AND SHOULD BE MODIFIED AS NEEDED.

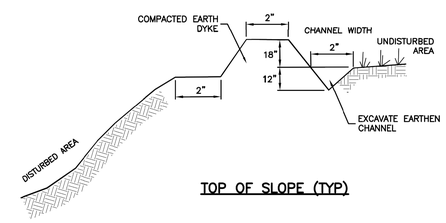

TOP OF SLOPE (TYP)

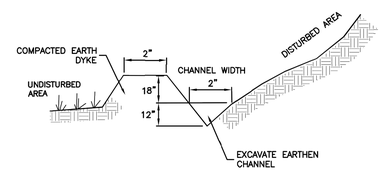

BASE OF SLOPE (TYP)

Diversion dike Plan **123**

February 2006 9

Galloway
Planning. Architecture. Engineering.
Trolley Corners Building
515 South 700 East, Suite 3F
Salt Lake City, UT 84102
303.770.8884 O
www.gallowayUS.com

©2015. Galloway & Company, Inc. All Rights Reserved

Watts ENTERPRISES

LICENSED PROFESSIONAL ENGINEER No. 275660 Richard M. Piggott 1-13-17 STATE OF UTAH

WATTS ENTERPRISES
FAIRWAYS AT WOLF CREEK
PHASE 4 & 5
EDEN, UTAH 84310

#	Date	Issue / Description	Init.

Project No:	WAT01.01
Drawn By:	JST
Checked By:	RMP
Date:	1/12/2017

EROSION CONTROL DETAILS (APWA)

EC03

Sheet 14 of 29

Inlet protection – gravel sock

1. **GENERAL**
   A. Description. Placement of gravel sock on grade.
      1) Upstream of, or in front of storm drain inlets to filter or pond water runoff.
      2) At inlets in paved or unpaved areas where up gradient area is to be disturbed by construction activities.

2. **PRODUCTS** (Not used)

3. **EXECUTION**
   A. On-grade inlet protection:
      1) Provide on-grade inlet protection when completely blocking a storm drain inlet box would result in forcing water further downstream would cause flooding or other undesirable results.
      2) Prepare filter media (gravel sock, straw waddle, or other approved media) in accordance with manufacturer's recommendations.
      3) Install filter media just upstream of the inlet box.
      4) Filter media shall butt tightly against the face of the curb and angle at approximately a 45-degree angle away from the curb to trap runoff between the media and the curb.
      5) Excessive flows will flow either over or around the filter media and into the inlet box.
      6) Expect ponding behind the filter media.
   B. Drop inlet protection:
      1) Use drop inlet protection at low points in the curb and when diverting flows further downstream will not cause undesirable results.
      2) Prepare filter media (gravel sock, straw waddle, or other approved media) in accordance with manufacturer's recommendations.
      3) Install filter media around the entire perimeter of the inlet grate.
      4) Filter media shall butt tightly against the face of the curb on both sides of the inlet grate.
      5) Excessive flows will either flow around the media or over the top and into the inlet box.
      6) Expect ponding around the inlet box.
   C. Maintenance
      1) Inspect inlet protection after every large storm event and at a minimum of once monthly.
      2) Remove sediment accumulated when it reaches 2-inches in depth.
      3) Replace filter medium when damage has occurred or when medium is no longer functioning as intended.

10

NARRATIVE: THIS PLAN MAY BE USED FOR THE CONSTRUCTION OF A STORM WATER BEST MANAGEMENT PRACTICE (BMP). IT IS NOT INCLUSIVE OF ALL PRACTICES AVAILABLE AND IS ONLY SPECIFIC TO THE CONSTRUCTION OF THIS TYPE. MAINTENANCE OF THIS TYPE OF INSTALLATION IS IMPORTANT AND SHOULD BE CONTINUOUSLY MONITORED BY THE CONTRACTOR AND ENGINEER. DETAILS SHOWN HERE HIGHLIGHT IMPORTANT PARTS OF CONSTRUCTION, AND SHOULD BE MODIFIED AS NEEDED.

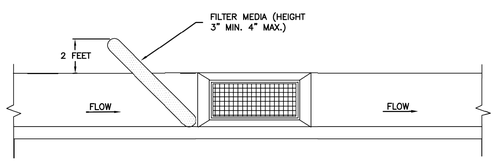

ON-GRADE INLET PROTECTION DETAIL

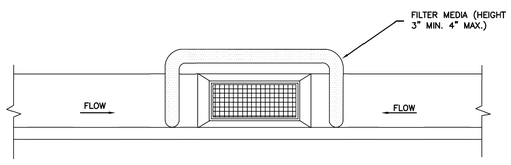

SUMP INLET PROTECTION DETAIL

Inlet protection - gravel sock

Plan **124** Sheet 1 of 3

September 2006 11

Inlet protection – fence or straw bale

1. **GENERAL**
   A. Description. A temporary sediment barrier around storm drain inlet.
   B. Application. At inlets in paved or unpaved areas where up gradient area is to be disturbed by construction activities.

2. **PRODUCT** (Not used)

3. **EXECUTION**
   A. Installation and application criteria.
      1) Provide up gradient sediment controls, such as silt fence during construction of inlet.
      2) When construction of inlet is complete erect straw bale barrier, silt fence or other approved sediment barrier surrounding perimeter of inlet.
      3) Install filter fabric completely around grate.
   B. Maintenance.
      1) Inspect inlet protection after every large storm event and at a minimum of once monthly.
      2) Remove sediment accumulated when it reaches 4-inches in depth.
      3) Repair or re-align barrier or fence as needed.
      4) Look for bypassing or undercutting and re-compact soil around barrier or fence as required.

14

NARRATIVE: THIS PLAN MAY BE USED FOR THE CONSTRUCTION OF A STORM WATER BEST MANAGEMENT PRACTICE (BMP). IT IS NOT INCLUSIVE OF ALL PRACTICES AVAILABLE AND IS ONLY SPECIFIC TO THE CONSTRUCTION OF THIS TYPE. MAINTENANCE OF THIS TYPE OF INSTALLATION IS IMPORTANT AND SHOULD BE CONTINUOUSLY MONITORED BY THE CONTRACTOR AND ENGINEER. DETAILS SHOWN HERE HIGHLIGHT IMPORTANT PARTS OF CONSTRUCTION, AND SHOULD BE MODIFIED AS NEEDED.

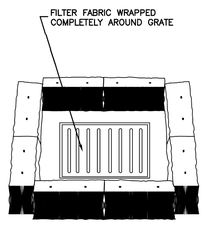

STRAW BALE BARRIER
(PLAN No. 121)

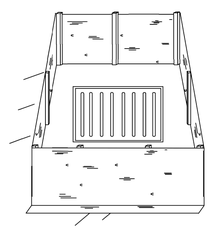

SILT FENCE
(PLAN No. 122)

Inlet protection - fence or straw bale

Plan **124** Sheet 3 of 3

February 2006 15

Equipment and vehicle wash down area

1. **GENERAL**
   A. Description. A temporary stabilized pad of gravel for general washing of equipment and construction vehicles.
   B. Application.
      1) At any site where regular washing of vehicles and equipment will occur.
      2) May also be used as a filling point for water trucks limiting erosion caused by overflow or spillage of water.

2. **PRODUCT** (Not used)

3. **EXECUTION**
   A. Clear and grub area and grade to provide maximum slope of 1 percent away from paved roadway.
   B. Compact subgrade.
   C. Place filter fabric under wash down area if desired (recommended for wash area that remains more than 3 months).
   D. Install silt fence down gradient (see Plan 122)
   E. Maintenance.
      1) Requires periodic top dressing with additional stones.
      2) Solely used to control sediment in wash water. Cannot be utilized for washing equipment or vehicles that may cause contamination of runoff (such as fertilizer equipment or concrete equipment).
      3) Keep the wash area in a condition which will prevent tracking or flow of mud onto public rights-of-way.
      4) Periodically dress the top with 2-inch stone may be required, as conditions demand, and repair any structures used to trap sediments.
      5) Inspect daily for loss of gravel or sediment buildup.
      6) Inspect adjacent area for sediment deposit and install additional controls as necessary.
      7) Expand stabilized area as required to accommodate activities.
      8) Maintain silt fence as outlined in Plan 122.

16

NARRATIVE: THIS PLAN MAY BE USED FOR THE CONSTRUCTION OF A STORM WATER BEST MANAGEMENT PRACTICE (BMP). IT IS NOT INCLUSIVE OF ALL PRACTICES AVAILABLE AND IS ONLY SPECIFIC TO THE CONSTRUCTION OF THIS TYPE. MAINTENANCE OF THIS TYPE OF INSTALLATION IS IMPORTANT AND SHOULD BE CONTINUOUSLY MONITORED BY THE CONTRACTOR AND ENGINEER. DETAILS SHOWN HERE HIGHLIGHT IMPORTANT PARTS OF CONSTRUCTION, AND SHOULD BE MODIFIED AS NEEDED.

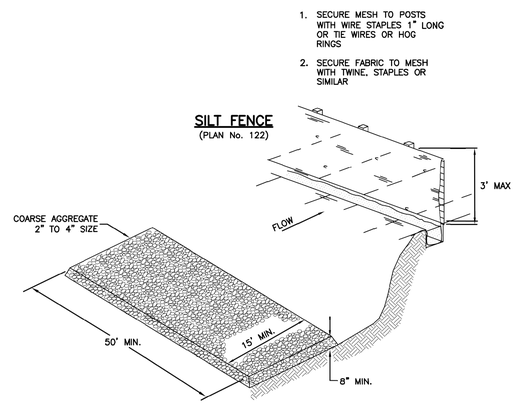

WASH DOWN AREA

Equipment and vehicle wash down area

Plan **125**

Februaryl 2006 17

Galloway
Planning. Architecture. Engineering.
Trolley Corners Building
515 South 700 East, Suite 3F
Salt Lake City, UT 84102
303.770.8884 O
www.gallowayUS.com

©2015. Galloway & Company, Inc. All Rights Reserved

Watts ENTERPRISES

LICENSED PROFESSIONAL ENGINEER No. 275660 Richard M. Piggott 1-12-17 STATE OF UTAH

WATTS ENTERPRISES
FAIRWAYS AT WOLF CREEK
PHASE 4 & 5

EDEN, UTAH 84310

#	Date	Issue / Description	Init.

Project No:	WAT01.01
Drawn By:	JST
Checked By:	RMP
Date:	1/12/2017

EROSION CONTROL DETAILS (APWA)

EC04

Sheet 15 of 29

Stabilized roadway entrance

1. GENERAL

A. Description. A temporary stabilized pad of gravel for controlling equipment and construction vehicle access to the site.

B. Application. At any site where vehicles and equipment enter the public right of way.

2. PRODUCT (Not used)

3 EXECUTION

A. Clear and grub area and grade to provide maximum slope of 1 percent away from paved roadway.

B. Compact subgrade.

C. Place filter fabric under stone if desired (recommended for entrance area that remains more than 3 months).

D. Maintenance.

1) Prevent tracking or flow of mud into the public right-of-way.
2) Periodic top dressing with 2-inch stone may be required, as conditions demand, and repair any structures used to trap sediments.
3) Inspect daily for loss of gravel or sediment buildup.
4) Inspect adjacent area for sediment deposit and install additional controls as necessary.
5) Expand stabilized area as required to accommodate activities.

NARRATIVE: THIS PLAN MAY BE USED FOR THE CONSTRUCTION OF A STORM WATER BEST MANAGEMENT PRACTICE (BMP). IT IS NOT INCLUSIVE OF ALL PRACTICES AVAILABLE AND IS ONLY SPECIFIC TO THE CONSTRUCTION OF THIS TYPE. MAINTENANCE OF THIS TYPE OF INSTALLATION IS IMPORTANT AND SHOULD BE CONTINUOUSLY MONITORED BY THE CONTRACTOR AND ENGINEER. DETAILS SHOWN HERE HIGHLIGHT IMPORTANT PARTS OF CONSTRUCTION, AND SHOULD BE MODIFIED AS NEEDED.

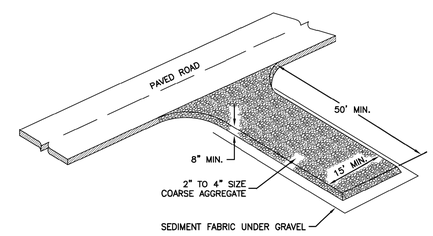

Stabilized roadway entrance

Plan
126

Galloway
Planning. Architecture. Engineering.
Trolley Corners Building
515 South 700 East, Suite 3F
Salt Lake City, UT 84102
303.770.8884 O
www.gallowayUS.com

©2015. Galloway & Company, Inc. All Rights Reserved

Watts ENTERPRISES

LICENSED PROFESSIONAL ENGINEER
No. 275600
Richard M. Piggott
1-13-17
STATE OF UTAH

WATTS ENTERPRISES
FAIRWAYS AT WOLF CREEK
PHASE 4 & 5

EDEN, UTAH 84310

#	Date	Issue / Description	Init.

Project No:	WAT01.01
Drawn By:	JST
Checked By:	RMP
Date:	1/12/2017

EROSION CONTROL DETAILS (APWA)

EC05

Sheet 16 of 29

30" Frame and cover

1. **GENERAL**
   A. The frame and cover fits the manhole in Plan 411.

2. **PRODUCTS**
   A. Castings: Grey iron class 35 minimum, ASTM A 48, coated with asphalt based paint or better (except on machined surfaces).
      1) Cast the heat number on the frame and cover.
      2) Give the frame and cover a machine finish so the cover will not rock.
      3) √ designates machined surface.
      4) Cast the words "SEWER" on the cover in upper case flush with the surface finish.

3. **EXECUTION**
   A. Except in paved streets, provide locking manhole covers in easements, alleys, parking lots, and all other places. Drill and tap two holes to a depth of 1-inch at 90 degrees to pry hole and install 3/4 x 3/4-inch allen socket set screws.

210

Sanitary sewer manhole

1. **GENERAL**
   A. The drawing shows typical pipe connections. Refer to construction drawings for connection locations or refer to field location of existing piping when engineering pipe connection to the manhole.
   B. Manhole size.
      1) Diameter is 4 feet: For sewers under 12" diameter.
      2) Diameter is 5 feet: For sewers 12" and larger, or when 3 or more pipes intersect the manhole.

2. **PRODUCTS**
   A. Base Course: Untreated base course, APWA Section 32 11 23. Do not use gravel as a base course without ENGINEER's permission.
   B. Backfill: Common fill, APWA Section 31 05 13. Maximum particle size 2-inches.
   C. Concrete: Class 4000, APWA Section 03 30 04.
   D. Riser and Reducing Riser: ASTM C 478.
   E. Reinforcement: Deformed, 60 ksi yield grade steel, ASTM A 615.
   F. Grout: 2 parts sand to 1 part cement mortar, ASTM C 1329.
   G. Stabilization-Separation Geotextile: Moderate or high at CONTRACTOR's choice, APWA Section 31 05 19.

3. **EXECUTION**
   A. Foundation Stabilization: Get ENGINEER's permission to use a sewer rock or a granular backfill borrow in a geotextile wrap to stabilize an unstable foundation.
   B. Base Course Placement: APWA Section 32 11 23. Maximum lift thickness is 8-inches before compaction. Compaction is 95 percent or greater relative to a modified proctor density, APWA Section 31 23 26.
   C. Invert Cover. During construction, place invert covers over the top of pipe in manholes that currently convey sewerage. See Plan 412.
   D. Pipe Connections: Grout around all pipe openings.
   E. Pipe Seal: Install rubber-based pipe seals on all plastic pipes when connecting plastic pipes to manholes. Hold water-stop in place with stainless steel bands.
   F. Joints: Place flexible gasket-type sealant in all riser joints. Finish with grout.
   G. Adjustment: If the required manhole adjustment is more than 1'-0", remove the cone and grade rings and adjust the manhole elevation with the appropriate manhole section, the cone section, and the grade rings or plastic form to make frame and lid match finish grade.
   H Finish: Provide smooth and neat finishes on interior of cones, shafts, and rings. Imperfect moldings or honeycombs will not be accepted.
   I. Backfill: Provide backfill against the manhole shaft. Pea gravel and recycled RAP aggregate is NOT ALLOWED. Water jetting is NOT allowed. Maximum lift thickness is 8-inches before compaction. Compaction is 95 percent or greater relative to a standard proctor density, APWA Section 31 23 26.

212

Cover collar for sanitary sewer manhole

1. **GENERAL**
   A. In a pavement surface, the concrete will support the frame under traffic loadings.

2. **PRODUCTS**
   A. Concrete: Class 4000, APWA Section 03 30 04.
   B. Concrete Curing Agent: Type ID Class A (clear with fugitive dye), membrane forming compound, APWA Section 03 39 00.

3. **EXECUTION**
   A. Pavement Preparation: Provide a neat vertical and concentric joint between concrete and existing asphalt concrete surfaces. Clean edges of all dirt, oil, and loose debris.
   B. Concrete Placement: Fill the annular space around the frame and cover casting with concrete. Apply a broom finish. Apply a curing agent.

216

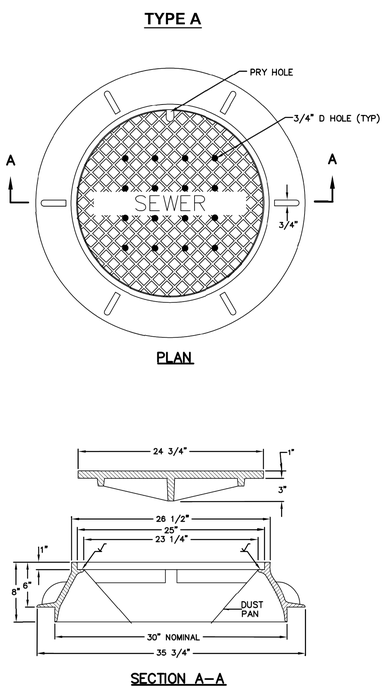

April 1997 — 211 — *30" Frame and cover* — Plan **402**

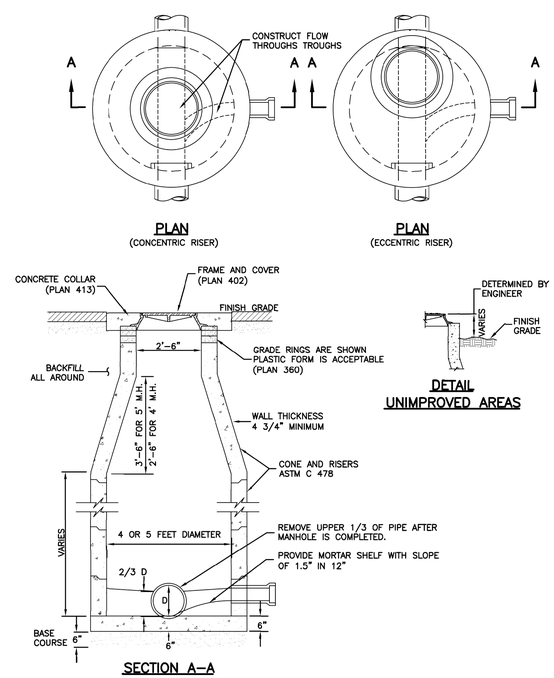

April 2011 — 213 — *Sanitary sewer manhole* — Plan **411**

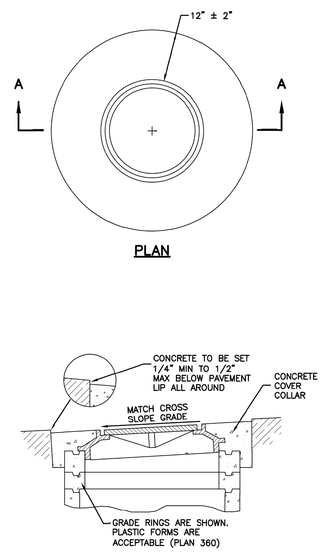

September 2001 — 217 — *Cover collar for sanitary sewer manhole* — Plan **413**

Galloway
Planning. Architecture. Engineering.
Trolley Corners Building
515 South 700 East, Suite 3F
Salt Lake City, UT 84102
303.770.8884 O
www.gallowayUS.com

©2015. Galloway & Company, Inc. All Rights Reserved

Watts ENTERPRISES

LICENSED PROFESSIONAL ENGINEER No. 275600 Richard M. Piggott 1-25-17 STATE OF UTAH

WATTS ENTERPRISES
FAIRWAYS AT WOLF CREEK
PHASE 4 & 5
EDEN, UTAH 84310

#	Date	Issue / Description	Init.

Project No:	WAT01.01
Drawn By:	JST
Checked By:	RMP
Date:	8/18/2016

SANITARY SEWER DETAILS (APWA)

DT01

Trench backfill

1. **GENERAL**
   A. The drawing applies to backfilling the trench above the pipe zone.

2. **PRODUCTS**
   A. Backfill: Common fill, APWA Section 31 05 13. Maximum particle size 3-inches.
   B. Flowable Fill: Target is 60 psi in 28 days with 90 psi maximum in 28 days, APWA Section 31 05 15. It must flow easily requiring no vibration for consolidation.

3. **EXECUTION**
   A. Trench Backfill:
      1) DO NOT USE sewer rock, pea gravel, or recycled RAP aggregate as trench backfill.
      2) Maximum lift thickness is 8-inches before compaction. Compaction is 95 percent or greater relative to a standard proctor density, APWA Section 31 23 26.
      3) Water jetting is NOT allowed.
      4) Submission of quality control compaction test result data developed for haunching areas may be requested by ENGINEER at any time. Provide results of tests immediately upon request.
   B. Flowable Fill: When required, place controlled low strength material in the trench, APWA Section 31 05 15. Cure the fill before placing surface restorations.
   C. Surface Restoration:
      1) Landscaped Surface: Rake to match existing grade. Replace vegetation to match pre-construction conditions. Follow APWA Section 32 92 00 (turf or grass) or APWA Section 32 93 13 (ground cover) requirements.
      2) Paved Surface: Do not install asphalt or concrete surfacing until trench compaction is acceptable to ENGINEER. Follow APWA Section 33 05 25 (asphalt surfacing), or APWA Section 33 05 25 (concrete surfacing).

202

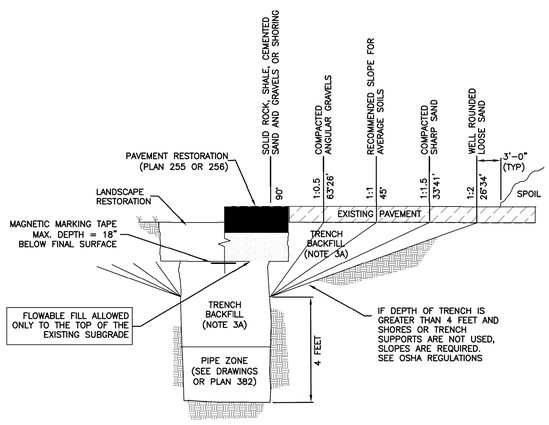

January 2011 — *Trench backfill* — Plan **381**

203

Pipe zone backfill

1. **GENERAL**
   A. Install the pipe in the center of the trench or no closer than 6-inches from the wall of the pipe to the wall of the trench.

2. **PRODUCTS**
   A. Base Course: Untreated base course, APWA Section 32 11 23. Do not use gravel as a base course without ENGINEER's permission.
   B. Backfill: Common fill, APWA Section 31 05 13. Maximum particle size 2-inches.
   C. Concrete: APWA Section 03 30 04.
   D. Flowable Fill: Target is 60 psi in 28 days with 90 psi maximum in 28 days, APWA Section 31 05 15. It must flow easily requiring no vibration for consolidation.
   E. Stabilization-Separation Geotextile: Moderate or high at CONTRACTOR's choice, APWA Section 31 05 19.

3. **EXECUTION**
   A. Excavate the Pipe Zone: Width is measured at the pipe spring line and includes any necessary sheathing. Provide width recommended by pipe manufacturer. Follow manufacturer's recommendations when using trench boxes.
   B. Foundation Stabilization: Get ENGINEER's permission before installing common fill. Vibrate to stabilize. Installation of stabilization-separation geotextile will be required to separate backfill material and native subgrade materials if common fill cannot provide a working surface or prevent soils migration.
   C. Base Course:
      1) Furnish untreated base course material unless specified otherwise by pipe manufacturer.
      2) Maximum lift thickness is 8-inches before compaction. Compaction is 95 percent or greater relative to a modified proctor density, APWA Section 31 23 26.
      3) When using concrete, provide at least Class 2,000 per APWA Section 03 30 04.
   D. Pipe Zone: DO NOT USE sewer rock, pea gravel, or recycled RAP aggregate in the pipe zone. Water jetting is NOT allowed.
      1) Maximum lift thickness is 8-inches before compaction. Compaction is 95 percent or greater relative to a modified proctor density, APWA Section 31 23 26 unless pipe manufacturer requires more stringent installation.
      2) Submission of quality control compaction test result data developed for the haunch zone may be requested by ENGINEER at any time. CONTRACTOR is to provide results of tests immediately upon request.
   E. Flowable Fill (when required and if allowed by pipe manufacturer):
      1) Place the controlled low strength material, APWA Section 31 05 15.
      2) Prevent pipe flotation by installing in lifts and providing pipe restraints as required by pipe manufacturer.
      3) Reset pipe to line and grade if pipe "floats" out of position.

204

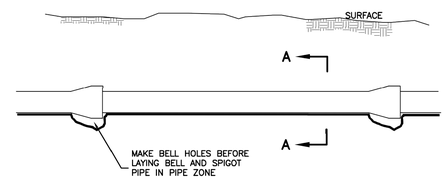

ELEVATION VIEW

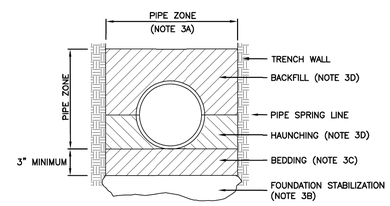

SECTION A–A

INSTALLATION

CONCRETE PIPE: FOLLOW ASTM C 1479
"STANDARD PRACTICE FOR INSTALLATION OF PRECAST CONCRETE SEWER, STORM DRAIN, AND CULVERT PIPE USING STANDARD INSTALLATIONS.

PVC AND HDPE PIPE: FOLLOW ASTM D 2321
"STANDARD PRACTICE FOR UNDERGROUND INSTALLATION OF THERMOPLASTIC PIPE FOR SEWERS AND OTHER GRAVITY-FLOW APPLICATIONS"

CORRUGATED METAL PIPE: FOLLOW ASTM A 798
"STANDARD PRACTICE FOR INSTALLING FACOTRY-MADE CORRUGATED STEEL PIPE FOR SEWERS AND OTHER APPLICATIONS.

VITRIFIED CLAY PIPE: FOLLOW ASTM C 12.
"STANDARD RECOMMENDED PRACTICE FOR INSTALLING VITRIFIED CLAY PIPE LINES.

January 2011 — *Pipe zone backfill* — Plan **382**

205

Galloway
Planning. Architecture. Engineering.
Trolley Corners Building
515 South 700 East, Suite 3F
Salt Lake City, UT 84102
303.770.8884 O
www.gallowayUS.com

©2015. Galloway & Company, Inc. All Rights Reserved

Watts ENTERPRISES

LICENSED PROFESSIONAL ENGINEER No. 275600 Richard M. Piggott 1-13-17 STATE OF UTAH

WATTS ENTERPRISES
FAIRWAYS AT WOLF CREEK
PHASE 4 & 5

EDEN, UTAH 84310

#	Date	Issue / Description	Init.

Project No:	WAT01.01
Drawn By:	JST
Checked By:	RMP
Date:	1/12/2017

SANITARY SEWER DETAILS (APWA)

DT02

Sheet 18 of 29

WOLF CREEK WATER AND SEWER IMPROVEMENT DISTRICT SPECIFICATIONS

- ALL WETTED MATERIALS SHALL BE CERTIFIED TO MEET NSF–61 AND NSF–372.
- MATERIAL OF PIPE **(DUCTILE IRON CLASS 51)**
- DEPTH OF COVER **(5 FEET)**
- TYPE OF SERVICE SADDLE **(1" DIRECT TAP)**
- SIZE AND TYPE OF SERVICE LATERAL **(1" COPPER, 200 PSI OR CTS HDPE)**
- SERVICE FITTINGS **(1" MUELLER COMPRESSION FITTINGS)**
- CORP. STOPS **(1" MUELLER)**
- SETTERS **(1" MUELLER WITH DOUBLE CHECK AND LOCKING DEVICE)**
- METER BOX **(24"DIA. X 36" PLASTIC OR CONCRETE)**
- METER BOX LID **(24" WITH 2" HOLE IN THE MIDDLE)**
- DEPTH OF SERVICE LINE AND METER **(5', METER 14"-24" BELOW LID OF BOX)**
- TYPE OF METER **(NEPTUNE RADIO READ)**
- THRUST RESTRAINT **(BOTH MEGA-LUG AND CONCRETE)**
- FIRE HYDRANTS **(MUELLER 5' BURY)**
- MAIN LINE LOCATION IN NEW SUBDIVISIONS **(IN ROADS; SHOULDERS OK IF EXISTING ROAD WITHOUT C+G)**
- UNDER NO CIRCUMSTANCE SHALL THE PIPE OR ACCESSORIES BE DROPPED INTO THE TRENCH
- OPEN ENDS OF ALL PIPELINES UNDER CONSTRUCTION SHALL BE COVERED AND EFFECTIVELY SEALED AT THE END OF THE DAY'S WORK

GARDNER ENGINEERING — CIVIL • LAND PLANNING — MUNICIPAL • LAND SURVEYING — 5150 SOUTH 375 EAST OGDEN, UT — OFFICE: 801.476.0202 FAX: 801.476.0066

WOLF CREEK WATER AND SEWER IMPROVEMENT DISTRICT STANDARD WATER DETAILS — 1/6

- METERS LOCATED IN R.O.W. ALONG FRONTAGE
- TRACER WIRE REQUIRED **(MIN. 14 GA., BRING UP F.H. BARREL AND WRAP AT LEAST TWICE ABOVE GROUND)**
- WARNING TAPE **(2" WIDE METALLIC, "BURIED WATER LINE BELOW", LOCATE 18"-24" BELOW FINISHED GRADE)**
- BLOW OFFS **(2" FLUSH VALVE -TYPE WITH DRAIN, MAINGUARD MODEL #78 OR EQUAL)**
- PRV STATIONS **(USE CLA-VAL VALVES WITH BYPASS AND PRESSURE RELIEF)**
- AIR/VAC VALVES **(LOCATED AT PEAKS, VENT OUTSIDE TRAVELED WAY, SEE DETAIL)**
- MAIN LINE VALVES **(MUELLER VALVES WITH MEGA LUG ON ALL BRANCHES AND RUNS OF TEES AND CROSSES)**

. PRESSURE TEST THE LINE TO 200 LBS FOR TWO HRS.

. ADD CHLORINE GRANULES IN LINE AS IT IS LAID.

. TAKE A CHLORINE TEST AT 50 PPM AND THEN 24 HRS LATER TAKE ANOTHER TEST TO ENSURE THAT A RESIDUAL OF 25 PPM REMAINS.

. FLUSH AND TAKE A SAMPLE TO THE LAB TO VERIFY THAT IT PASSES.

. ALL PIPE AND SERVICE CONNECTIONS WILL BE BEDDED WITH IMPORTED MATERIAL, SAND OR LIKE MATERIAL.

. CONTRACTOR'S LICENCE AND PROOF OF INSURANCE REQUIRED NO THIRD PARTY PERSON.

GARDNER ENGINEERING — CIVIL • LAND PLANNING — MUNICIPAL • LAND SURVEYING — 5150 SOUTH 375 EAST OGDEN, UT — OFFICE: 801.476.0202 FAX: 801.476.0066

WOLF CREEK WATER AND SEWER IMPROVEMENT DISTRICT STANDARD WATER DETAILS — 2/6

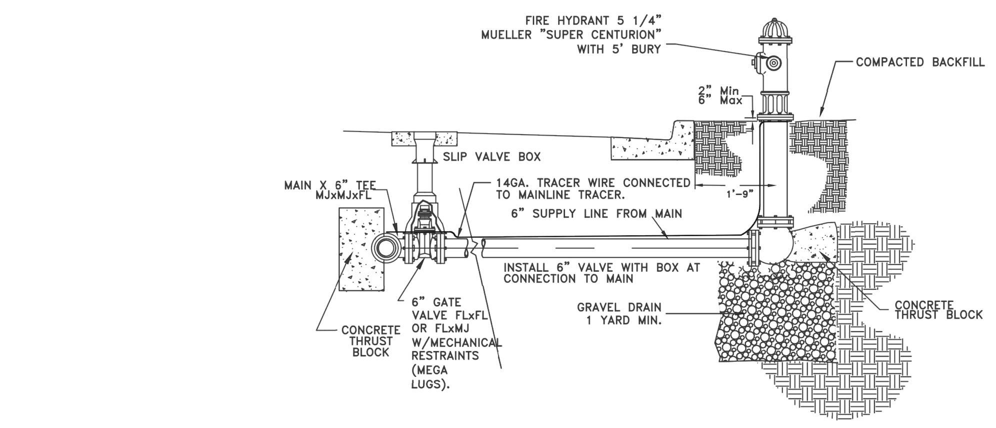

FIRE HYDRANT DETAIL

NOTES:

COPPER SETTERS
1" MUELLER W/DOUBLE CHECK AND LOCKING DEVICE

CORPORATION STOPS
1" MUELLER

ALL SERVICE FITTINGS:
1" MUELLER COMPRESSION W/S.S. INSERTS

LOCATION OF METER
ON EXTENSION OF PROPERTY LINE

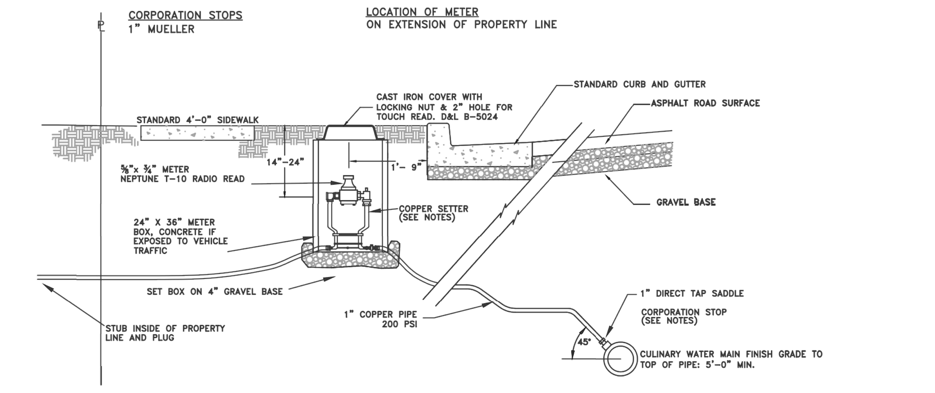

TYPICAL WATER CONNECTION\RE-CONNECTION

GENERAL NOTES:
1. ALL ITEMS SHALL BE INSTALLED NEW.
2. ALL ITEMS SHALL BE NSF 61 COMPLIANT AND MEET THE APPLICABLE AWWA STANDARD
3. THE CURRENT REQUIREMENTS OF THE UTAH DIVISION OF DRINKING WATER, GOVERNING THE MATERIALS AND INSTALLATION USED IN WATER PROJECTS SHALL BE MET.
4. THE WOLF CREEK WATER COMPANY SHALL BE CONTACTED AT LEAST 48 HOURS PRIOR TO ANY CONSTRUCTION (CONTACT: SYSTEM OPERATOR, ROB THOMAS, 801.430.4647)
5. ALL PIPE SHALL BE DUCTILE IRON CLASS 51, MIN. WORKING PRESSURE 200 PSI.
6. ALL PIPE SHALL BE PRESSURE TESTED AT 200 PSI FOR AT LEAST 2 HOURS.
7. CHLORINE GRANULES SHALL BE INSTALLED AS MAIN LINE IS LAID.
8. TWO CHLORINE TESTS ARE REQUIRED, 24 HOURS APART, BEFORE FLUSHING AND TAKING A SAMPLE FOR BACTERIALOGICAL TESTING.
9. CONTRACTOR'S LICENSE AND PROOF OF INSURANCE MUST BE PRESENTED TO AND VERIFIED BY SYSTEM OPERATOR.

NOTE: WHERE A WATER MAIN AND A SEWER MAIN MUST CROSS, THE WATER MAIN SHALL BE AT LEAST 18" ABOVE THE SEWER MAIN. SEPARATION DISTANCES ARE TO BE MEASURED EDGE-TO-EDGE. ALSO WATER MAINS SHALL NOT BE INSTALLED IN THE SAME TRENCH WITH EITHER SEWER OR SECONDARY PIPES.

GARDNER ENGINEERING — CIVIL • LAND PLANNING — MUNICIPAL • LAND SURVEYING — 5150 SOUTH 375 EAST OGDEN, UT — OFFICE: 801.476.0202 FAX: 801.476.0066

WOLF CREEK WATER AND SEWER IMPROVEMENT DISTRICT STANDARD WATER DETAILS — 3/6

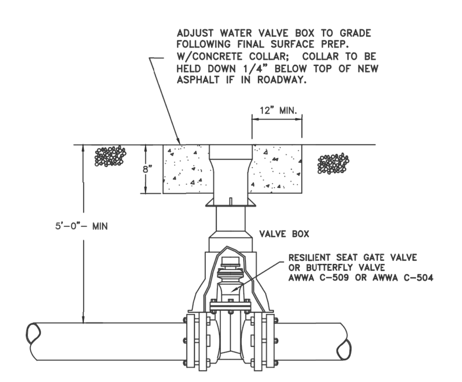

TYPICAL VALVE

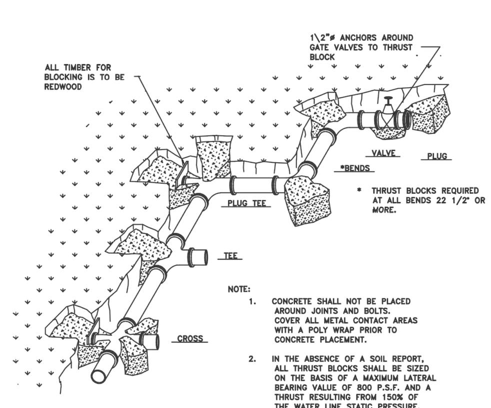

NOTE:
1. CONCRETE SHALL NOT BE PLACED AROUND JOINTS AND BOLTS. COVER ALL METAL CONTACT AREAS WITH A POLY WRAP PRIOR TO CONCRETE PLACEMENT.
2. IN THE ABSENCE OF A SOIL REPORT, ALL THRUST BLOCKS SHALL BE SIZED ON THE BASIS OF A MAXIMUM LATERAL BEARING VALUE OF 800 P.S.F. AND A THRUST RESULTING FROM 150% OF THE WATER LINE STATIC PRESSURE.

TABLE OF BEARING AREAS IN SQ. FT FOR CONCRETE THRUST BLOCKING

SIZE	BENDS 90°	45°	22 ½°	11 ¼°	TEES*	GATE VALVES	DEAD ENDS	CROSSW/ 1BRANCH PLUGGED	CROSSW/ 2 BRAN. PLUGGED
3	1.0	0.0	0.3	0	0.7	0.5	0.7	0.7	0.7
4	1.8	1.0	0.5	0	1.3	0.5	1.3	1.3	1.3
6	4.0	2.2	1.1	0	2.8	0.7	2.8	2.8	2.8
8	7.1	3.8	2.0	1.0	5.0	2.4	5.0	5.0	5.0
10	11.1	6.0	3.0	1.5	7.8	4.5	7.8	7.8	7.8
12	16.0	8.6	4.4	2.2	11.3	7.3	11.3	11.3	11.3
14	21.7	11.8	6.0	3.0	15.4	11.0	15.4	15.4	15.4
15	25.0	13.5	7.0	3.5	17.6	SPECIAL DESIGN	176	17.6	17.6
16	28.4	15.3	8.0	4.0	20.0		20.0	20.0	20.0
18	36.0	19.4	10.0	5.0	25.4		25.4	25.4	25.4
20	44.2	24.0	12.2	6.1	31.4		31.4	31.4	31.4
21	49.0	26.5	13.5	6.8	34.6		34.6	34.6	34.6
22	54.0	29.0	14.8	7.4	38.0		38.0	38.0	38.0
24	64.0	34.5	17.7	8.8	45.0		45.0	45.0	45.0
30	100.0	54.0	27.6	13.8	71.0		71.0	71.0	71.0
36	144.0	78.0	40.0	20.0	102.0		102.0	102.0	102.0

*SIZE IS BRANCH SIZE.

FOR 100 P.S.I. INTERNAL STATIC PRESSURE AND 1000 LBS.PER SQ. FT. SOIL BEARING CAPACITY.

ALL VALVES, TEES, CROSSES AND BENDS SHALL ALSO BE FITTED WITH MECHANICAL RESTRAINTS, SUCH AS MEGA LUGS OR APPROVED EQUAL.

AREAS GIVEN IN TABLE ARE BASED UPON AN INTERNAL STATIC PRESSURE OF 100 P.S.I AND A SOIL BEARING CAPACITY OF 1000 LBS PER SQ. FT. BEARING AREAS FOR ANY PRESSURE AND SOIL BEARING CAPACITY MAY BE OBTAINED BY MULTIPLYING THE TABULATED VALUES BY A CORRECTION FACTOR "F".

$$F = \frac{\text{ACTUAL SPECIFIED TEST PRESSURE IN HUNDREDS OF LBS/SQ. IN.}}{\text{ACTUAL SOIL BEARING CAPACITY IN THOUSANDS OF LBS.}}$$

EXAMPLE: TO FIND BEARING AREA FOR 8"–90° BEND WITH A STATIC INTERNAL PRESSURE OF 1500 P.S.I AND WITH A SOIL BEARING CAPACITY OF 3000 LBS. PER SQ. FT.
F=1.5 / 3=0.5 TABULATED VALUE = 7.1 SQ. FT.
0.5 X 7.1=3.56 ~ 4 SQ. FT. (~OR 2FT. LONG BY 2FT. HIGH.)

THRUST BLOCKING DETAIL
APPLIES TO ALL PRESSURE PIPE

NOTE: WHERE A WATER MAIN AND A SEWER MAIN MUST CROSS, THE WATER MAIN SHALL BE AT LEAST 18" ABOVE THE SEWER MAIN. SEPARATION DISTANCES ARE TO BE MEASURED EDGE-TO-EDGE. ALSO WATER MAINS SHALL NOT BE INSTALLED IN THE SAME TRENCH WITH EITHER SEWER OR SECONDARY PIPES.

GARDNER ENGINEERING — CIVIL • LAND PLANNING — MUNICIPAL • LAND SURVEYING — 5150 SOUTH 375 EAST OGDEN, UT — OFFICE: 801.476.0202 FAX: 801.476.0066

WOLF CREEK WATER AND SEWER IMPROVEMENT DISTRICT STANDARD WATER DETAILS — 4/6

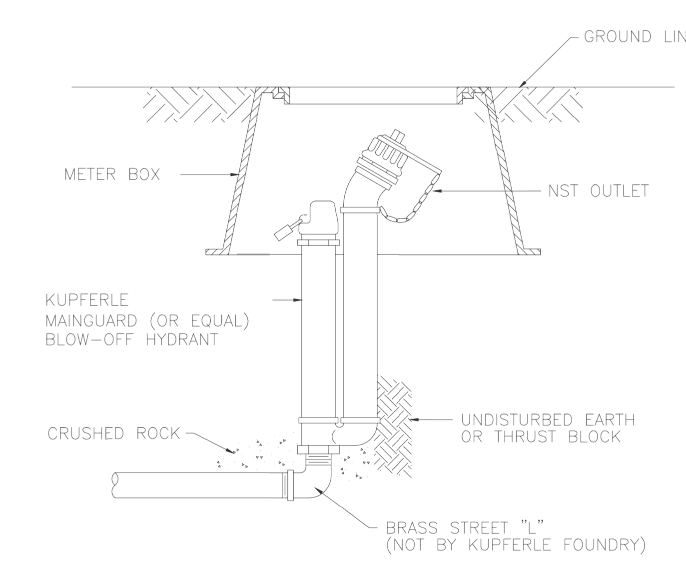

BLOW-OFF HYDRANT

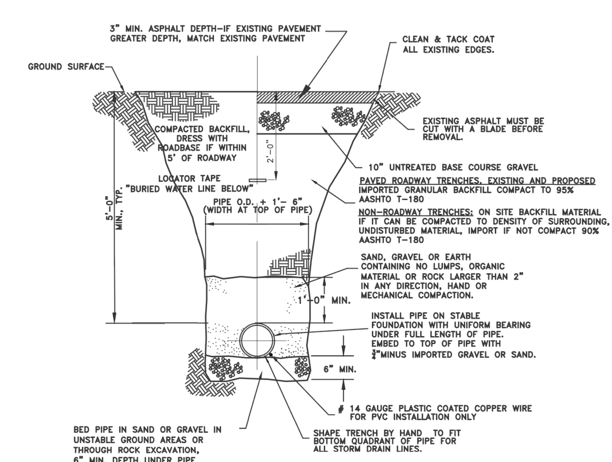

TYPICAL TRENCH SECTION

NOTE: WHERE A WATER MAIN AND A SEWER MAIN MUST CROSS, THE WATER MAIN SHALL BE AT LEAST 18" ABOVE THE SEWER MAIN. SEPARATION DISTANCES ARE TO BE MEASURED EDGE-TO-EDGE. ALSO WATER MAINS SHALL NOT BE INSTALLED IN THE SAME TRENCH WITH EITHER SEWER OR SECONDARY PIPES.

GARDNER ENGINEERING — CIVIL • LAND PLANNING — MUNICIPAL • LAND SURVEYING — 5150 SOUTH 375 EAST OGDEN, UT — OFFICE: 801.476.0202 FAX: 801.476.0066

WOLF CREEK WATER AND SEWER IMPROVEMENT DISTRICT STANDARD WATER DETAILS — 5/6

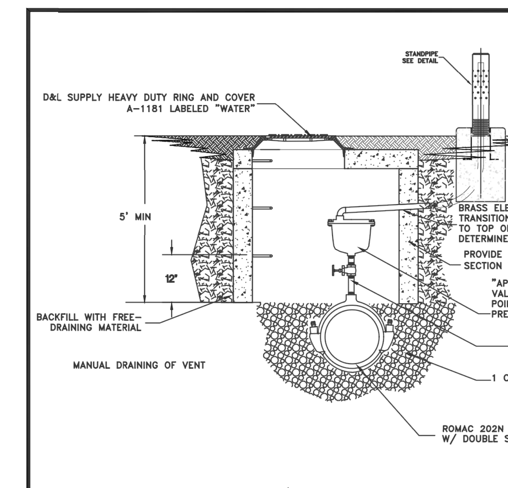

AIR/VAC VALVE DETAIL
NTS

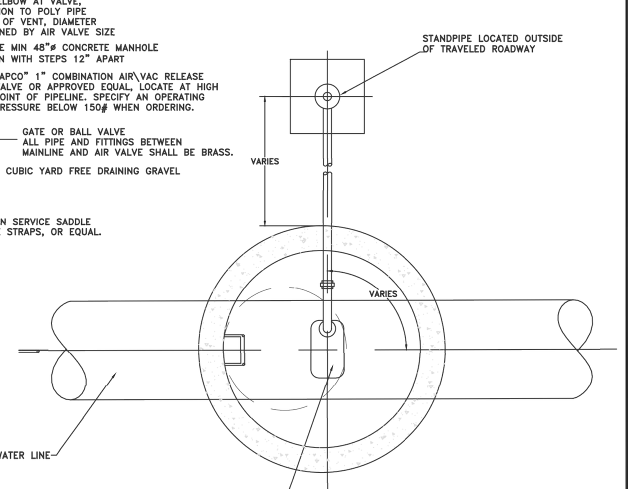

AIR VALVE PLAN VIEW
NTS

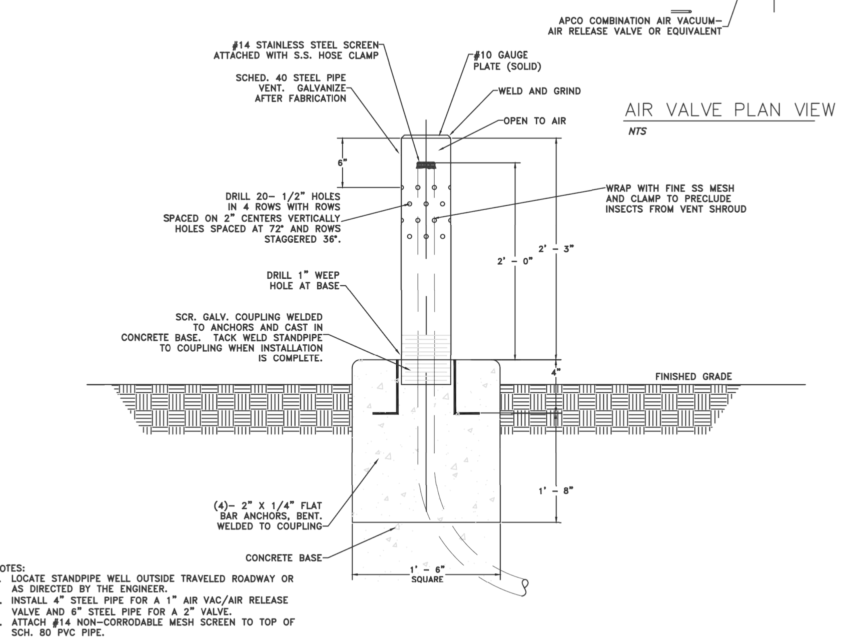

NOTES:
1. LOCATE STANDPIPE WELL OUTSIDE TRAVELED ROADWAY OR AS DIRECTED BY THE ENGINEER.
2. INSTALL 4" STEEL PIPE FOR A 1" AIR VAC/AIR RELEASE VALVE AND 6" STEEL PIPE FOR A 2" VALVE.
3. ATTACH #14 NON-CORRODABLE MESH SCREEN TO TOP OF SCH. 80 PVC PIPE.

STANDPIPE DETAIL
NTS

GARDNER ENGINEERING — CIVIL • LAND PLANNING — MUNICIPAL • LAND SURVEYING — 5150 SOUTH 375 EAST OGDEN, UT — OFFICE: 801.476.0202 FAX: 801.476.0066

WOLF CREEK WATER AND SEWER IMPROVEMENT DISTRICT STANDARD WATER DETAILS — 6/6

Galloway
Planning. Architecture. Engineering.
Trolley Corners Building
515 South 700 East, Suite 3F
Salt Lake City, UT 84102
303.770.8884 O
www.gallowayUS.com

©2015. Galloway & Company, Inc. All Rights Reserved

Watts ENTERPRISES

LICENSED PROFESSIONAL ENGINEER No. 275090 Richard M. Piggott 1.13.17 STATE OF UTAH

WATTS ENTERPRISES FAIRWAYS AT WOLF CREEK PHASE 4 & 5

EDEN, UTAH 84310

#	Date	Issue / Description	Init.

Project No:	WAT01.01
Drawn By:	JST
Checked By:	RMP
Date:	1/12/2017

WATER DETAILS (WCWSID)

DT03

30" Frame and cover

1. **GENERAL**
   A. The frame and cover fits.
      1) Cleanout box type B in Plan 331, and
      2) Precast manhole in Plan 341.

2. **PRODUCTS**
   A. Castings: Grey iron class 35 minimum, ASTM A 48.
      1) Coated with asphalt based paint or better (except on machined surfaces).
      2) Cast the heat number on the frame and cover.
      3) Give the frame and cover a machine finish so the cover will not rock.
      4) √ designates a machine finished surface.
      5) Cast the words "STORM DRAIN" on the cover in upper case flush with the surface finish.

3. **EXECUTION**
   A. Except in paved streets, provide locking manhole covers in easements, alleys, parking lots, and all other places. Drill and tap two holes to a depth of 1-inch at 90 degrees to pry hole and install 3/4 x 3/4-inch allen socket set screws.

Catch basin

1. **GENERAL**
   A. The drawing shows typical pipe connections. Refer to construction drawings for connection locations or refer to field location of existing piping when engineering pipe connection to the box.

2. **PRODUCTS**
   A. Base Course: Untreated base course, APWA Section 32 11 23. Do not use gravel as a base course without ENGINEER's permission.
   B. Backfill: Common fill, APWA Section 31 05 13. Maximum particle size 2-inches.
   C. Concrete: Class 4000, APWA Section 03 30 04.
   D. Reinforcement: Deformed, 60 ksi yield grade steel, ASTM A 615.

3. **EXECUTION**
   A. Base Course Placement: APWA Section 32 11 23. Maximum lift thickness is 8-inches before compaction. Compaction is 95 percent or greater relative to a modified proctor density, APWA Section 31 23 26.
   B. Curb Face Opening: Make opening at least 4-inches high. Provide at least a 2-inch drop between the "warp line" in the gutter flow-line and the top of the grate at the curb face opening.
   C. Concrete Placement: APWA Section 03 30 10. Provide 1/2-inch radius edges. Apply a broom finish. Apply a curing agent.
   D. Backfill: Place backfill against the basin wall. Pea gravel and recycled RAP aggregate is NOT ALLOWED. Water jetting is NOT allowed. Maximum lift thickness is 8-inches before compaction. Compaction is 95 percent or greater relative to a standard proctor density, APWA Section 31 23 26.

Combination catch basin and cleanout box

1. **GENERAL**
   A. The drawing shows typical pipe connections. Refer to construction drawings for connection locations or refer to field location of existing piping when engineering pipe connection to the box.

2. **PRODUCTS**
   A. Base Course: Untreated base course, APWA Section 32 11 23. Do not use gravel as a base course without ENGINEER's permission.
   B. Backfill: Common fill, APWA Section 31 05 13. Maximum particle size 2-inches.
   C. Concrete: Class 4000, APWA Section 03 30 04.
   D. Reinforcement: Deformed, 60 ksi yield grade steel, ASTM A 615.
   E. Ladder Rungs: Plastic, or plastic coated steel typically 8-inches wide.

3. **EXECUTION**
   A. Base Course Placement: APWA Section 32 11 23. Maximum lift thickness is 8-inches before compaction. Compaction is 95 percent or greater relative to a modified proctor density, APWA Section 31 23 26.
   B. Curb Face Opening: Make opening at least 4-inches high. Provide at least a 2-inch drop between the "begin warp" line in the gutter flow-line and the top of the grate at the curb face opening.
   C. Ladder Rungs: Provide rungs in boxes over 6 feet deep. When measured from the floor of the box, place bottom rung the greater distance of 4 feet from the floor of the box or 1 foot above the top of the pipe. Place top rung within 3 feet of bottom of box ceiling.
   D. Concrete Placement: APWA Section 03 30 10. Provide 1/2-inch radius edges. Apply a broom finish. Apply a curing agent.
   E. Backfill: Provide backfill against all sides of the box. Pea gravel and recycled RAP aggregate is NOT ALLOWED. Water jetting is NOT allowed. Maximum lift thickness is 8-inches before compaction. Compaction is 95 percent or greater relative to a standard proctor density, APWA Section 31 23 26.

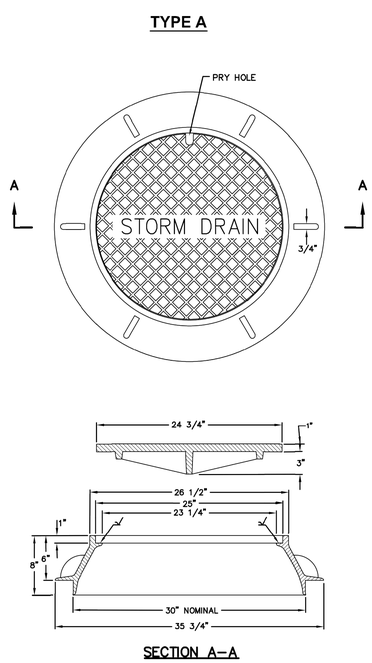

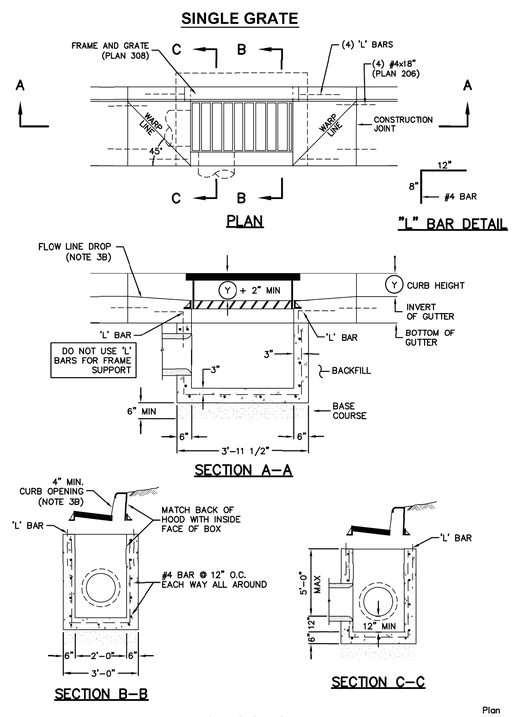

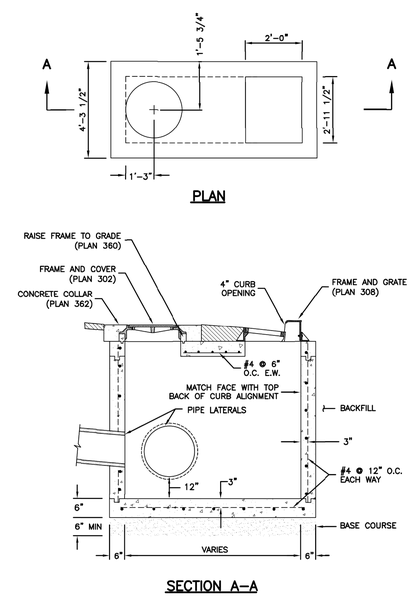

30" Frame and cover — Plan **302** Sheet 1 of 2

September 2001 — 133

Catch basin — Plan **315** Sheet 1 of 2

September 2010 — 155

Combination catch basin and cleanout box — Plan **316**

March 2011 — 159

Galloway
Planning. Architecture. Engineering.
Trolley Corners Building
515 South 700 East, Suite 3F
Salt Lake City, UT 84102
303.770.8884 O
www.gallowayUS.com

©2015. Galloway & Company, Inc. All Rights Reserved

Watts ENTERPRISES

LICENSED PROFESSIONAL ENGINEER No. 275600 Richard M. Piggott 1-13-17 STATE OF UTAH

WATTS ENTERPRISES
FAIRWAYS AT WOLF CREEK
PHASE 4 & 5

EDEN, UTAH 84310

#	Date	Issue / Description	Init.

Project No:	WAT01.01
Drawn By:	JST
Checked By:	RMP
Date:	1/12/2017

STORM DRAIN DETAILS (APWA)

DT04

Sheet 20 of 29

Pipe outfall

1. **GENERAL**
   A. Round concrete pipe application.
   B. Additional requirements are specified in APWA Section 33 05 02.

2. **PRODUCTS**
   A. Use the same quality of precast end section as the pipe.
   B. Use the joint material and connection that is the same as the joints in the pipeline.

3. **EXECUTION**
   A. General dimensions and geometric shapes may vary from manufacturer to manufacturer.
   B. Steel reinforcement is not required in the concrete end section shown.
   C. Provide joint restraint connectors if required by ENGINEER.

170

Precast manhole

1. **GENERAL**
   A. The drawing shows typical pipe connections. Refer to construction drawings for connection locations or refer to field location of existing piping when engineering pipe connection to the manhole.
   B. Manhole size.
      1) Diameter is 4 feet: For pipe under 12" diameter.
      2) Diameter is 5 feet: For pipe 12" and larger, or when 3 or more drain pipes intersect the manhole.
   C. Wall thickness:
      1) Precast reinforced concrete walls 4 3/4" minimum.
      2) Cast-in-place concrete to be 8 inches thick minimum.
2. **PRODUCTS**
   A. Base Course: Untreated base course, APWA Section 32 11 23. Do not use gravel as a base course without ENGINEER's permission.
   B. Backfill: Common fill, APWA Section 31 05 13. Maximum particle size 2-inches.
   C. Concrete: Class 4000, APWA Section 03 30 04.
   D. Riser and Reducing Riser: Reinforced concrete pipe, Class III, ASTM C 478.
   E. Joint Sealant: Rubber based, compressible.
   F. Grout: 2 parts sand to 1 part cement mortar.

3. **EXECUTION**
   A. Foundation Stabilization: Get ENGINEER's permission to use a sewer rock or pea gravel to stabilize an unstable foundation.
   B. Base Course Placement: APWA Section 32 11 23. Maximum lift thickness is 8-inches before compaction. Compaction is 95 percent or greater relative to a modified proctor density, APWA Section 31 23 26.
   C. Invert cover. During construction, place invert covers over the top of pipe in manholes that currently convey sewerage. See Plan 412.
   D. Concrete Deck or Reducing Riser: When depth of manhole from pipe invert to finish grade exceeds 7 feet, use an ASTM C 478 reducing riser cone.
   E. Pipe Connections: Grout around all pipe openings.
   F. Water Stops: Install rubber-based water-stops on all plastic pipes when connecting plastic pipes to manholes. Hold water-stop in place with stainless steel bands.
   G. Joints: Place flexible sealant in all joints. Finish with grout.
   H. Finish: Provide smooth and neat finishes on interior of cones, shafts, and rings. Imperfect moldings or honeycombs will not be accepted.
   I. Backfill: Provide backfill against the manhole shaft. Pea gravel and recycled RAP aggregate is NOT ALLOWED. Water jetting is NOT allowed. Maximum lift thickness is 8-inches before compaction. Compaction is 95 percent or greater relative to a standard proctor density, APWA Section 31 23 26.

188

Raise frame to grade

1. **GENERAL**
   A. Grade rings are used in non-pressurized applications to adjust frame to grade.

2. **PRODUCTS**
   A. Concrete: Class 4000, APWA Section 03 30 04.
   B. Reinforcement: Deformed, 60 ksi yield grade hoop steel, ASTM A 615.
      1) 2 1/2" High Rings: Provide two 1/4" diameter steel hoops tied with No. 14 AWS gage wire, 8" on center.
      2) 6" and 8" High Rings: Provide four 1/4" diameter steel hoops, tied with No. 14 AWS gage wire, 8" on center.
   C. Gasket: Rubber-based, compressible.

3. **EXECUTION**
   A. Ring Manufacture:
      1) Fabrication, APWA Section 03 30 10.
      2) Cure, APWA Section 03 39 00.
   B. Field Installation: Seat rings with a compressible gasket.

192

ROUND WITH FLARE

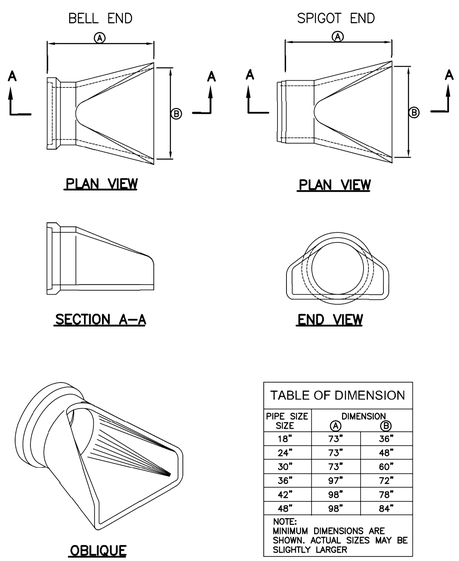

TABLE OF DIMENSION		
PIPE SIZE SIZE	DIMENSION (A)	(B)
18"	73"	36"
24"	73"	48"
30"	73"	60"
36"	97"	72"
42"	98"	78"
48"	98"	84"

NOTE:
MINIMUM DIMENSIONS ARE SHOWN, ACTUAL SIZES MAY BE SLIGHTLY LARGER

PIPE PASS-THROUGH BASE

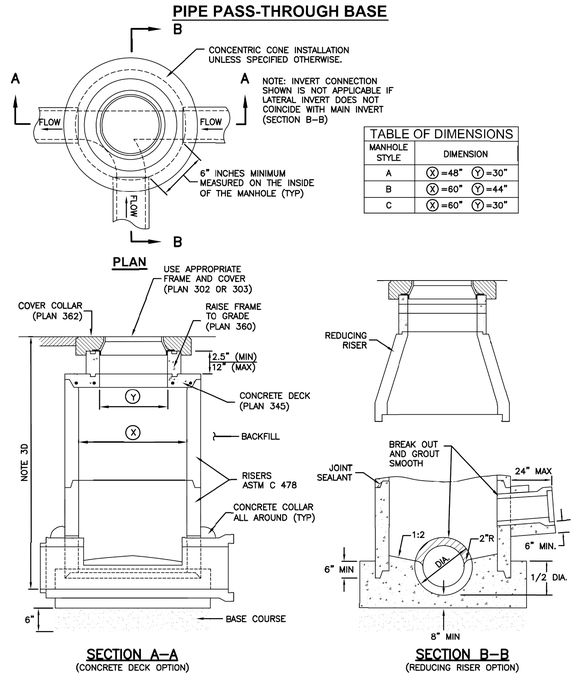

TABLE OF DIMENSIONS	
MANHOLE STYLE	DIMENSION
A	(X)=48" (Y)=30"
B	(X)=60" (Y)=44"
C	(X)=60" (Y)=30"

GRADE RING

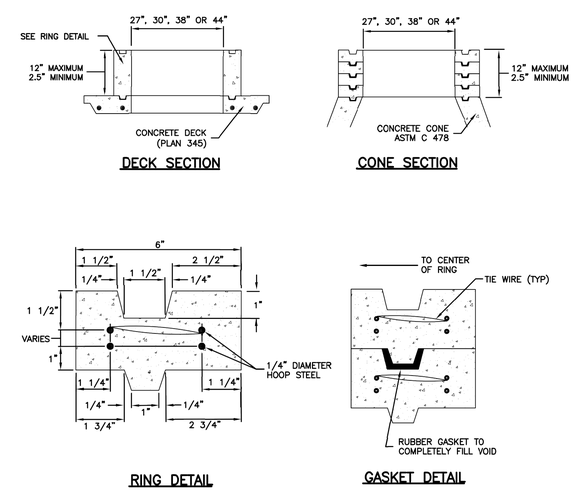

Galloway
Planning. Architecture. Engineering.
Trolley Corners Building
515 South 700 East, Suite 3F
Salt Lake City, UT 84102
303.770.8884 O
www.gallowayUS.com

©2015. Galloway & Company, Inc. All Rights Reserved

Watts ENTERPRISES

LICENSED PROFESSIONAL ENGINEER No. 275600 Richard M. Piggott 1-13-17 STATE OF UTAH

WATTS ENTERPRISES
FAIRWAYS AT WOLF CREEK
PHASE 4 & 5
EDEN, UTAH 84310

#	Date	Issue / Description	Init.

Project No:	WAT01.01
Drawn By:	JST
Checked By:	RMP
Date:	1/12/2017

STORM DRAIN DETAILS (APWA)

DT05
Sheet 21 of 29

Cover collar for storm drains

1. **GENERAL**
   A. In a pavement surface, the concrete will support the frame under traffic loadings.

2. **PRODUCTS**
   A. Concrete: Class 4000, APWA Section 03 30 04.
   B. Concrete Curing Agent: Clear membrane forming compound with fugitive dye (Type ID Class A), APWA Section 03 39 00.

3. **EXECUTION**
   A. Pavement Preparation: Provide a neat vertical and concentric joint between concrete and existing asphalt concrete surfaces. Clean edges of all dirt, oil, and loose debris.
   B. Concrete Placement: APWA Section 03 30 10. Fill the annular space around the frame and cover casting with concrete. Apply a broom finish. Apply a curing agent.

Trench backfill

1. **GENERAL**
   A. The drawing applies to backfilling the trench above the pipe zone.

2. **PRODUCTS**
   A. Backfill: Common fill, APWA Section 31 05 13. Maximum particle size 3-inches.
   B. Flowable Fill: Target is 60 psi in 28 days with 90 psi maximum in 28 days, APWA Section 31 05 15. It must flow easily requiring no vibration for consolidation.

3. **EXECUTION**
   A. Trench Backfill:
      1) DO NOT USE sewer rock, pea gravel, or recycled RAP aggregate as trench backfill.
      2) Maximum lift thickness is 8-inches before compaction. Compaction is 95 percent or greater relative to a standard proctor density, APWA Section 31 23 26.
      3) Water jetting is NOT allowed.
      4) Submission of quality control compaction test result data developed for haunching areas may be requested by ENGINEER at any time. Provide results of tests immediately upon request.
   B. Flowable Fill: When required, place controlled low strength material in the trench, APWA Section 31 05 15. Cure the fill before placing surface restorations.
   C. Surface Restoration:
      1) Landscaped Surface: Rake to match existing grade. Replace vegetation to match pre-construction conditions. Follow APWA Section 32 92 00 (turf or grass) or APWA Section 32 93 13 (ground cover) requirements.
      2) Paved Surface: Do not install asphalt or concrete surfacing until trench compaction is acceptable to ENGINEER. Follow APWA Section 33 05 25 (asphalt surfacing), or APWA Section 33 05 25 (concrete surfacing).

Pipe zone backfill

1. **GENERAL**
   A. Install the pipe in the center of the trench or no closer than 6-inches from the wall of the pipe to the wall of the trench.

2. **PRODUCTS**
   A. Base Course: Untreated base course, APWA Section 32 11 23. Do not use gravel as a base course without ENGINEER's permission.
   B. Backfill: Common fill, APWA Section 31 05 13. Maximum particle size 2-inches.
   C. Concrete: APWA Section 03 30 04.
   D. Flowable Fill: Target is 60 psi in 28 days with 90 psi maximum in 28 days, APWA Section 31 05 15. It must flow easily requiring no vibration for consolidation.
   E. Stabilization-Separation Geotextile: Moderate or high at CONTRACTOR's choice, APWA Section 31 05 19.

3. **EXECUTION**
   A. Excavate the Pipe Zone: Width is measured at the pipe spring line and includes any necessary sheathing. Provide width recommended by pipe manufacturer. Follow manufacturer's recommendations when using trench boxes.
   B. Foundation Stabilization: Get ENGINEER's permission before installing common fill. Vibrate to stabilize. Installation of stabilization-separation geotextile will be required to separate backfill material and native subgrade materials if common fill cannot provide a working surface or prevent soils migration.
   C. Base Course:
      1) Furnish untreated base course material unless specified otherwise by pipe manufacturer.
      2) Maximum lift thickness is 8-inches before compaction. Compaction is 95 percent or greater relative to a modified proctor density, APWA Section 31 23 26.
      3) When using concrete, provide at least Class 2,000 per APWA Section 03 30 04.
   D. Pipe Zone: DO NOT USE sewer rock, pea gravel, or recycled RAP aggregate in the pipe zone. Water jetting is NOT allowed.
      1) Maximum lift thickness is 8-inches before compaction. Compaction is 95 percent or greater relative to a modified proctor density, APWA Section 31 23 26 unless pipe manufacturer requires more stringent installation.
      2) Submission of quality control compaction test result data developed for the haunch zone may be requested by ENGINEER at any time. CONTRACTOR is to provide results of tests immediately upon request.
   E. Flowable Fill (when required and if allowed by pipe manufacturer):
      1) Place the controlled low strength material, APWA Section 31 05 15.
      2) Prevent pipe flotation by installing in lifts and providing pipe restraints as required by pipe manufacturer.
      3) Reset pipe to line and grade if pipe "floats" out of position.

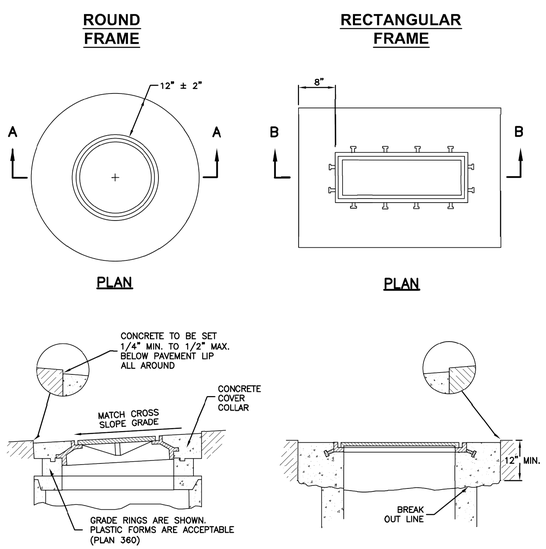

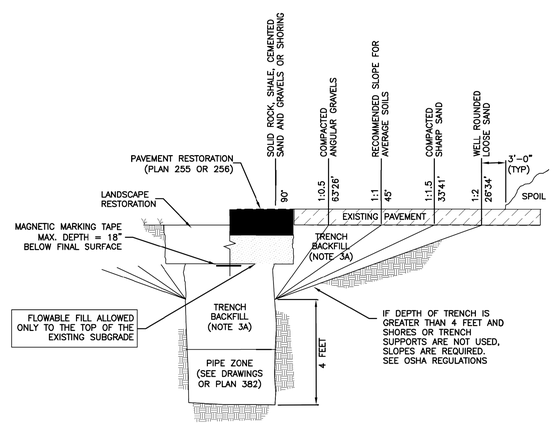

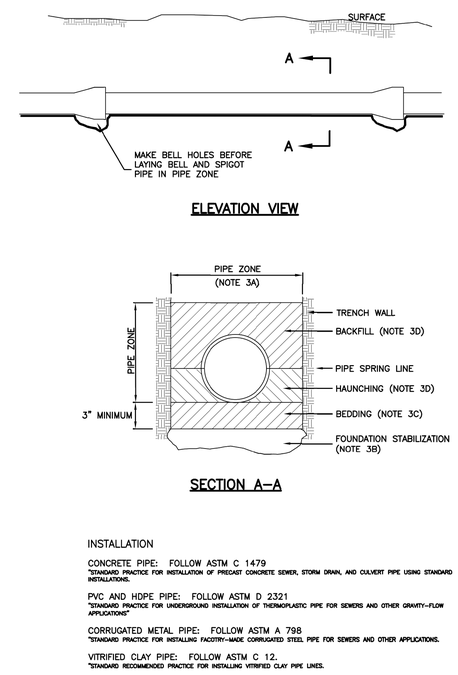

Cover collar for storm drains — Plan **362**

Trench backfill — Plan **381**

Pipe zone backfill — Plan **382**

Galloway
Planning. Architecture. Engineering.
Trolley Corners Building
515 South 700 East, Suite 3F
Salt Lake City, UT 84102
303.770.8884 O
www.gallowayUS.com
©2015. Galloway & Company, Inc. All Rights Reserved

Watts ENTERPRISES

LICENSED PROFESSIONAL ENGINEER No. 275600 Richard M. Piggott 1-12-17 STATE OF UTAH

WATTS ENTERPRISES
FAIRWAYS AT WOLF CREEK
PHASE 4 & 5
EDEN, UTAH 84310

#	Date	Issue / Description	Init.

Project No:	WAT01.01
Drawn By:	JST
Checked By:	RMP
Date:	1/12/2017

STORM DRAIN DETAILS (APWA)

DT06

Sheet 22 of 29

PROJECT INFORMATION	
ENGINEERED PRODUCT MANAGER:	PEGGY GRAHAM 720-982-6303 PEGGY.GRAHAM@ADS-PIPE.COM
ADS SALES REP:	RYAN HORSLEY 801-391-7793 RYAN.HORSLEY@ADS-PIPE.COM
PROJECT NO:	152935

ADVANCED DRAINAGE SYSTEMS, INC.

WATTS ENTERPRISES FAIRWAYS AT WOLF CREEK

EDEN, UT

STORMWATER CHAMBER SPECIFICATIONS

1. CHAMBERS SHALL BE STORMTECH DC-780 OR APPROVED EQUAL.
2. CHAMBERS SHALL BE MADE FROM VIRGIN, IMPACT-MODIFIED POLYPROPYLENE COPOLYMERS.
3. CHAMBER ROWS SHALL PROVIDE CONTINUOUS, UNOBSTRUCTED INTERNAL SPACE WITH NO INTERNAL SUPPORT PANELS THAT WOULD IMPEDE FLOW OR LIMIT ACCESS FOR INSPECTION.
4. THE STRUCTURAL DESIGN OF THE CHAMBERS, THE STRUCTURAL BACKFILL, AND THE INSTALLATION REQUIREMENTS SHALL ENSURE THAT THE LOAD FACTORS SPECIFIED IN THE AASHTO LRFD BRIDGE DESIGN SPECIFICATIONS, SECTION 12.12, ARE MET FOR: 1) LONG-DURATION DEAD LOADS AND 2) SHORT-DURATION LIVE LOADS, BASED ON THE AASHTO DESIGN TRUCK WITH CONSIDERATION FOR IMPACT AND MULTIPLE VEHICLE PRESENCES.
5. CHAMBERS SHALL MEET THE REQUIREMENTS OF ASTM F2418, "STANDARD SPECIFICATION FOR POLYPROPYLENE (PP) CORRUGATED WALL STORMWATER COLLECTION CHAMBERS".
6. CHAMBERS SHALL BE DESIGNED AND ALLOWABLE LOADS DETERMINED IN ACCORDANCE WITH ASTM F2787, "STANDARD PRACTICE FOR STRUCTURAL DESIGN OF THERMOPLASTIC CORRUGATED WALL STORMWATER COLLECTION CHAMBERS".
7. ONLY CHAMBERS THAT ARE APPROVED BY THE SITE DESIGN ENGINEER WILL BE ALLOWED. THE CHAMBER MANUFACTURER SHALL SUBMIT THE FOLLOWING UPON REQUEST TO THE SITE DESIGN ENGINEER FOR APPROVAL BEFORE DELIVERING CHAMBERS TO THE PROJECT SITE:
   a. A STRUCTURAL EVALUATION SEALED BY A REGISTERED PROFESSIONAL ENGINEER THAT DEMONSTRATES THAT THE SAFETY FACTORS ARE GREATER THAN OR EQUAL TO 1.95 FOR DEAD LOAD AND 1.75 FOR LIVE LOAD, THE MINIMUM REQUIRED BY ASTM F2787 AND BY AASHTO FOR THERMOPLASTIC PIPE.
   b. A STRUCTURAL EVALUATION SEALED BY A REGISTERED PROFESSIONAL ENGINEER THAT DEMONSTRATES THAT THE LOAD FACTORS SPECIFIED IN THE AASHTO BRIDGE DESIGN SPECIFICATIONS, SECTION 12.12, ARE MET. THE 50 YEAR CREEP MODULUS DATA SPECIFIED IN ASTM F2418 OR ASTM F2922 MUST BE USED AS PART OF THE AASHTO STRUCTURAL EVALUATION TO VERIFY LONG-TERM PERFORMANCE.
   c. STRUCTURAL CROSS SECTION DETAIL ON WHICH THE STRUCTURAL EVALUATION IS BASED.
8. CHAMBERS AND END CAPS SHALL BE PRODUCED AT AN ISO 9001 CERTIFIED MANUFACTURING FACILITY.

IMPORTANT - NOTES FOR THE BIDDING AND INSTALLATION OF THE DC-780 CHAMBER SYSTEM

1. STORMTECH DC-780 CHAMBERS SHALL NOT BE INSTALLED UNTIL THE MANUFACTURER'S REPRESENTATIVE HAS COMPLETED A PRE-CONSTRUCTION MEETING WITH THE INSTALLERS.
2. STORMTECH DC-780 CHAMBERS SHALL BE INSTALLED IN ACCORDANCE WITH THE "STORMTECH SC-310/SC-740/DC-780 CONSTRUCTION GUIDE".
3. CHAMBERS ARE NOT TO BE BACKFILLED WITH A DOZER OR AN EXCAVATOR SITUATED OVER THE CHAMBERS. STORMTECH RECOMMENDS 3 BACKFILL METHODS:
   - STONESHOOTER LOCATED OFF THE CHAMBER BED.
   - BACKFILL AS ROWS ARE BUILT USING AN EXCAVATOR ON THE FOUNDATION STONE OR SUBGRADE.
   - BACKFILL FROM OUTSIDE THE EXCAVATION USING A LONG BOOM HOE OR EXCAVATOR.
4. THE FOUNDATION STONE SHALL BE LEVELED AND COMPACTED PRIOR TO PLACING CHAMBERS.
5. JOINTS BETWEEN CHAMBERS SHALL BE PROPERLY SEATED PRIOR TO PLACING STONE.
6. MAINTAIN MINIMUM - 6" (150 mm) SPACING BETWEEN THE CHAMBER ROWS.
7. EMBEDMENT STONE SURROUNDING CHAMBERS MUST BE A CLEAN, CRUSHED, ANGULAR STONE 3/4-2" (20-50 mm).
8. THE CONTRACTOR MUST REPORT ANY DISCREPANCIES WITH CHAMBER FOUNDATION MATERIALS BEARING CAPACITIES TO THE SITE DESIGN ENGINEER.
9. ADS RECOMMENDS THE USE OF "FLEXSTORM CATCH IT" INSERTS DURING CONSTRUCTION FOR ALL INLETS TO PROTECT THE SUBSURFACE STORMWATER MANAGEMENT SYSTEM FROM CONSTRUCTION SITE RUNOFF.

NOTES FOR CONSTRUCTION EQUIPMENT

1. STORMTECH DC-780 CHAMBERS SHALL BE INSTALLED IN ACCORDANCE WITH THE "STORMTECH SC-310/SC-740/DC-780 CONSTRUCTION GUIDE".
2. THE USE OF CONSTRUCTION EQUIPMENT OVER DC-780 CHAMBERS IS LIMITED:
   - NO EQUIPMENT IS ALLOWED ON BARE CHAMBERS.
   - NO RUBBER TIRED LOADERS, DUMP TRUCKS, OR EXCAVATORS ARE ALLOWED UNTIL PROPER FILL DEPTHS ARE REACHED IN ACCORDANCE WITH THE "STORMTECH SC-310/SC-740/DC-780 CONSTRUCTION GUIDE".
   - WEIGHT LIMITS FOR CONSTRUCTION EQUIPMENT CAN BE FOUND IN THE "STORMTECH SC-310/SC-740/DC-780 CONSTRUCTION GUIDE".
3. FULL 36" (900 mm) OF STABILIZED COVER MATERIALS OVER THE CHAMBERS IS REQUIRED FOR DUMP TRUCK TRAVEL OR DUMPING.

USE OF A DOZER TO PUSH EMBEDMENT STONE BETWEEN THE ROWS OF CHAMBERS MAY CAUSE DAMAGE TO THE CHAMBERS AND IS NOT AN ACCEPTABLE BACKFILL METHOD. ANY CHAMBERS DAMAGED BY THE "DUMP AND PUSH" METHOD ARE NOT COVERED UNDER THE STORMTECH STANDARD WARRANTY.

CONTACT STORMTECH AT 1-888-892-2694 WITH ANY QUESTIONS ON INSTALLATION REQUIREMENTS OR WEIGHT LIMITS FOR CONSTRUCTION EQUIPMENT.

©2013 ADS, INC.

CONCEPTUAL LAYOUT

(65) STORMTECH DC-780 CHAMBERS
(10) STORMTECH SC-780 END CAPS
INSTALLED WITH 6" COVER STONE, 14" BASE STONE, 40% STONE VOID
INSTALLED SYSTEM VOLUME: 6,329 CF (PERIMETER STONE INCLUDED)
AREA OF SYSTEM: 2,715 FT²
PERIMETER OF SYSTEM: 262 FT

PROPOSED ELEVATIONS

MAXIMUM ALLOWABLE GRADE (TOP OF PAVEMENT/UNPAVED):	5242.00
MINIMUM ALLOWABLE GRADE (UNPAVED WITH TRAFFIC):	5232.00
MINIMUM ALLOWABLE GRADE (UNPAVED NO TRAFFIC):	5231.50
MINIMUM ALLOWABLE GRADE (BASE OF FLEXIBLE PAVEMENT):	5231.50
MINIMUM ALLOWABLE GRADE (TOP OF RIGID CONCRETE PAVEMENT):	5231.50
TOP OF STONE:	5230.50
TOP OF CHAMBER:	5230.00
15" BOTTOM MANIFOLD INVERT:	5227.61
24" ISOLATOR ROW AND MANIFOLD INVERT:	5227.51
BOTTOM OF CHAMBER:	5227.50
UNDERDRAIN INVERT:	5226.33
BOTTOM OF STONE:	5226.33

NOTES

- MANIFOLD SIZE TO BE DETERMINED BY SITE DESIGN ENGINEER. SEE TECH SHEET #7 FOR MANIFOLD SIZING GUIDANCE.
- DUE TO THE ADAPTATION OF THIS CHAMBER SYSTEM TO SPECIFIC SITE AND DESIGN CONSTRAINTS, IT MAY BE NECESSARY TO CUT AND COUPLE ADDITIONAL PIPE TO STANDARD MANIFOLD COMPONENTS IN THE FIELD.
- THE SITE DESIGN ENGINEER MUST REVIEW ELEVATIONS AND IF NECESSARY ADJUST GRADING TO ENSURE THE CHAMBER COVER REQUIREMENTS ARE MET.
- THE SITE DESIGN ENGINEER MUST REVIEW THE PROXIMITY OF THE CHAMBERS TO THE SLOPE AND CONSIDER EFFECTS OF POSSIBLE SATURATED SOILS ON THE SLOPE'S INTEGRITY.

NOT FOR CONSTRUCTION

THIS LAYOUT IS FOR DIMENSIONAL PURPOSES ONLY TO PROVE CONCEPT & THE REQUIRED STORAGE VOLUME CAN BE ACHIEVED ON SITE.

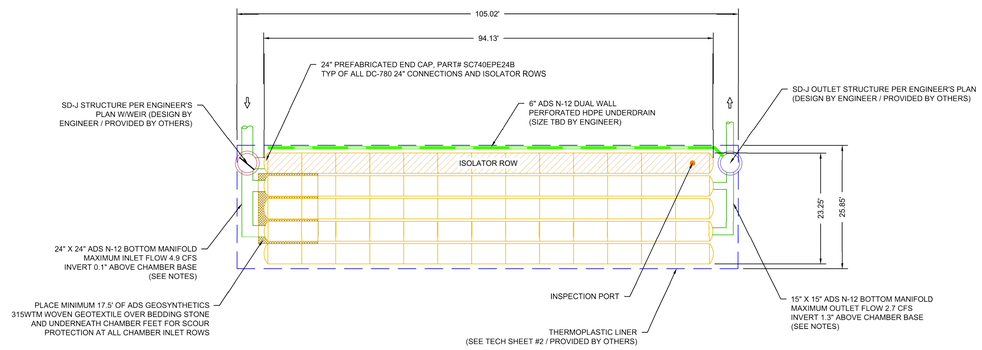

WATTS ENTERPRISES
EDEN, UT

DATE: 7/12/16 | DRAWN: WOM
PROJECT # 152935 | CHECKED: KMS

REV	DRW	CHK	DESCRIPTION

StormTech
70 INWOOD ROAD, SUITE 3, ROCKY HILL, CT 06067
866-520-9188 888-892-2694 | WWW.STORMTECH.COM

ADS
ADVANCED DRAINAGE SYSTEMS, INC.
4640 TRUEMAN BLVD
HILLIARD, OH 43026
1-800-733-7473

0 1' 15' 30'

THIS DRAWING HAS BEEN PREPARED BASED ON INFORMATION PROVIDED TO ADS UNDER THE DIRECTION OF THE SITE DESIGN ENGINEER OR OTHER APPLICABLE REPRESENTATIVE. IT IS THE SITE DESIGN ENGINEER'S FINAL REVIEW THIS DRAWING PRIOR TO CONSTRUCTION. IT IS THE ULTIMATE RESPONSIBILITY OF THE SITE DESIGN ENGINEER TO ENSURE THAT THE PRODUCT(S) SPECIFIED AND PROVIDED MEET THE SITE DESIGN REQUIREMENTS.

SHEET
2 OF 5

Galloway
Planning. Architecture. Engineering.
Trolley Corners Building
515 South 700 East, Suite 3F
Salt Lake City, UT 84102
303.770.8884 O
www.gallowayUS.com

©2015. Galloway & Company, Inc. All Rights Reserved

Watts ENTERPRISES

LICENSED PROFESSIONAL ENGINEER
No. 275600
Richard M. Piggott
1-12-17
STATE OF UTAH

WATTS ENTERPRISES
FAIRWAYS AT WOLF CREEK
PHASE 4 & 5

EDEN, UTAH 84310

#	Date	Issue / Description	Init.

Project No:	WAT01.01
Drawn By:	JST
Checked By:	RMP
Date:	1/12/2017

STORM DRAIN DETAILS

DT07

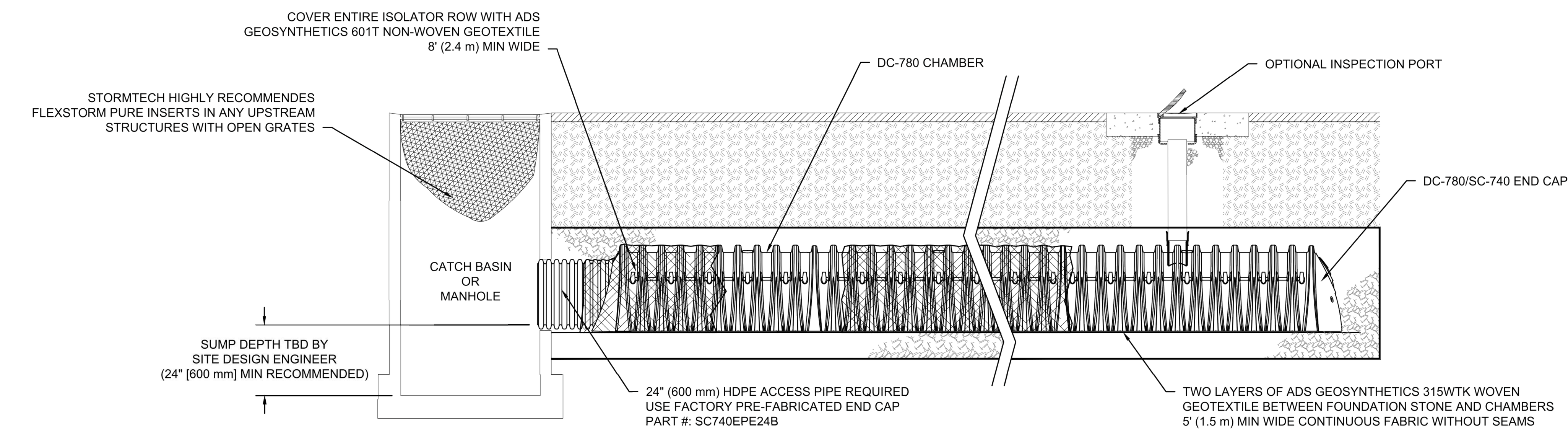

DC-780 ISOLATOR ROW DETAIL
NTS

INSPECTION & MAINTENANCE

STEP 1) INSPECT ISOLATOR ROW FOR SEDIMENT
- A. INSPECTION PORTS (IF PRESENT)
  - A.1. REMOVE/OPEN LID ON NYLOPLAST INLINE DRAIN
  - A.2. REMOVE AND CLEAN FLEXSTORM FILTER IF INSTALLED
  - A.3. USING A FLASHLIGHT AND STADIA ROD, MEASURE DEPTH OF SEDIMENT AND RECORD ON MAINTENANCE LOG
  - A.4. LOWER A CAMERA INTO ISOLATOR ROW FOR VISUAL INSPECTION OF SEDIMENT LEVELS (OPTIONAL)
  - A.5. IF SEDIMENT IS AT, OR ABOVE, 3" (80 mm) PROCEED TO STEP 2. IF NOT, PROCEED TO STEP 3.
- B. ALL ISOLATOR ROWS
  - B.1. REMOVE COVER FROM STRUCTURE AT UPSTREAM END OF ISOLATOR ROW
  - B.2. USING A FLASHLIGHT, INSPECT DOWN THE ISOLATOR ROW THROUGH OUTLET PIPE
    - i) MIRRORS ON POLES OR CAMERAS MAY BE USED TO AVOID A CONFINED SPACE ENTRY
    - ii) FOLLOW OSHA REGULATIONS FOR CONFINED SPACE ENTRY IF ENTERING MANHOLE
  - B.3. IF SEDIMENT IS AT, OR ABOVE, 3" (80 mm) PROCEED TO STEP 2. IF NOT, PROCEED TO STEP 3.

STEP 2) CLEAN OUT ISOLATOR ROW USING THE JETVAC PROCESS
- A. A FIXED CULVERT CLEANING NOZZLE WITH REAR FACING SPREAD OF 45" (1.1 m) OR MORE IS PREFERRED
- B. APPLY MULTIPLE PASSES OF JETVAC UNTIL BACKFLUSH WATER IS CLEAN
- C. VACUUM STRUCTURE SUMP AS REQUIRED

STEP 3) REPLACE ALL COVERS, GRATES, FILTERS, AND LIDS; RECORD OBSERVATIONS AND ACTIONS.

STEP 4) INSPECT AND CLEAN BASINS AND MANHOLES UPSTREAM OF THE STORMTECH SYSTEM.

NOTES

1. INSPECT EVERY 6 MONTHS DURING THE FIRST YEAR OF OPERATION. ADJUST THE INSPECTION INTERVAL BASED ON PREVIOUS OBSERVATIONS OF SEDIMENT ACCUMULATION AND HIGH WATER ELEVATIONS.
2. CONDUCT JETTING AND VACTORING ANNUALLY OR WHEN INSPECTION SHOWS THAT MAINTENANCE IS NECESSARY.

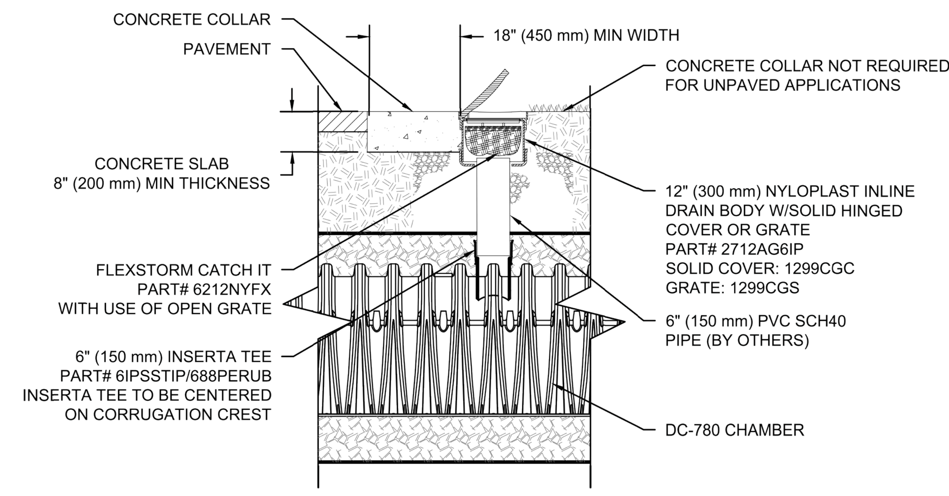

DC-780 6" INSPECTION PORT DETAIL
NTS

WATTS ENTERPRISES
EDEN, UT
DATE: 7/12/16 | DRAWN: WCM
PROJECT #: 152935 | CHECKED: KMS

REV	DRW	CHK	DESCRIPTION

StormTech® Detention • Retention • Water Quality
70 INWOOD ROAD, SUITE 3 | ROCKY HILL | CT | 06067
860-529-8188 | 888-892-2694 | WWW.STORMTECH.COM

ADS® ADVANCED DRAINAGE SYSTEMS, INC.
4640 TRUEMAN BLVD
HILLIARD, OH 43026
1-800-733-7473

THIS DRAWING HAS BEEN PREPARED BASED ON INFORMATION PROVIDED TO ADS UNDER THE DIRECTION OF THE SITE DESIGN ENGINEER OR OTHER PROJECT REPRESENTATIVE. THE SITE DESIGN ENGINEER SHALL REVIEW THIS DRAWING PRIOR TO CONSTRUCTION. IT IS THE ULTIMATE RESPONSIBILITY OF THE SITE DESIGN ENGINEER TO ENSURE THAT THE PRODUCT(S) DEPICTED AND ALL ASSOCIATED DETAILS MEET ALL APPLICABLE LAWS, REGULATIONS, AND PROJECT REQUIREMENTS.

SHEET
4 OF 5

ACCEPTABLE FILL MATERIALS: STORMTECH DC-780 CHAMBER SYSTEMS

	MATERIAL LOCATION	DESCRIPTION	AASHTO MATERIAL CLASSIFICATIONS	COMPACTION / DENSITY REQUIREMENT
D	**FINAL FILL:** FILL MATERIAL FOR LAYER 'D' STARTS FROM THE TOP OF THE 'C' LAYER TO THE BOTTOM OF FLEXIBLE PAVEMENT OR UNPAVED FINISHED GRADE ABOVE. NOTE THAT PAVEMENT SUBBASE MAY BE PART OF THE 'D' LAYER	ANY SOIL/ROCK MATERIALS, NATIVE SOILS, OR PER ENGINEER'S PLANS. CHECK PLANS FOR PAVEMENT SUBGRADE REQUIREMENTS.	N/A	PREPARE PER SITE DESIGN ENGINEER'S PLANS. PAVED INSTALLATIONS MAY HAVE STRINGENT MATERIAL AND PREPARATION REQUIREMENTS.
C	**INITIAL FILL:** FILL MATERIAL FOR LAYER 'C' STARTS FROM THE TOP OF THE EMBEDMENT STONE ('B' LAYER) TO 18" (450 mm) ABOVE THE TOP OF THE CHAMBER. NOTE THAT PAVEMENT SUBBASE MAY BE A PART OF THE 'C' LAYER.	GRANULAR WELL-GRADED SOIL/AGGREGATE MIXTURES, <35% FINES OR PROCESSED AGGREGATE. MOST PAVEMENT SUBBASE MATERIALS CAN BE USED IN LIEU OF THIS LAYER.	AASHTO M145[1] A-1, A-2-4, A-3 OR AASHTO M43[1] 3, 357, 4, 467, 5, 56, 57, 6, 67, 68, 7, 78, 8, 89, 9, 10	BEGIN COMPACTIONS AFTER 12" (300 mm) OF MATERIAL OVER THE CHAMBERS IS REACHED. COMPACT ADDITIONAL LAYERS IN 6" (150 mm) MAX LIFTS TO A MIN. 95% PROCTOR DENSITY FOR WELL GRADED MATERIAL AND 95% RELATIVE DENSITY FOR PROCESSED AGGREGATE MATERIALS. ROLLER GROSS VEHICLE WEIGHT NOT TO EXCEED 12,000 lbs (53 kN). DYNAMIC FORCE NOT TO EXCEED 20,000 lbs (89 kN).
B	**EMBEDMENT STONE:** FILL SURROUNDING THE CHAMBERS FROM THE FOUNDATION STONE ('A' LAYER) TO THE 'C' LAYER ABOVE.	CLEAN, CRUSHED, ANGULAR STONE	AASHTO M43[1] 3, 357, 4, 467, 5, 56, 57	NO COMPACTION REQUIRED.
A	**FOUNDATION STONE:** FILL BELOW CHAMBERS FROM THE SUBGRADE UP TO THE FOOT (BOTTOM) OF THE CHAMBER.	CLEAN, CRUSHED, ANGULAR STONE	AASHTO M43[1] 3, 357, 4, 467, 5, 56, 57	PLATE COMPACT OR ROLL TO ACHIEVE A FLAT SURFACE. [2,3]

PLEASE NOTE:
1. THE LISTED AASHTO DESIGNATIONS ARE FOR GRADATIONS ONLY. THE STONE MUST ALSO BE CLEAN, CRUSHED, ANGULAR. FOR EXAMPLE, A SPECIFICATION FOR #4 STONE WOULD STATE: "CLEAN, CRUSHED, ANGULAR NO. 4 (AASHTO M43) STONE".
2. STORMTECH COMPACTION REQUIREMENTS ARE MET FOR 'A' LOCATION MATERIALS WHEN PLACED AND COMPACTED IN 9" (230 mm) (MAX) LIFTS USING TWO FULL COVERAGES WITH A VIBRATORY COMPACTOR.
3. WHERE INFILTRATION SURFACES MAY BE COMPROMISED BY COMPACTION, FOR STANDARD DESIGN LOAD CONDITIONS, A FLAT SURFACE MAY BE ACHIEVED BY RAKING OR DRAGGING WITHOUT COMPACTION EQUIPMENT. FOR SPECIAL LOAD DESIGNS, CONTACT STORMTECH FOR COMPACTION REQUIREMENTS.

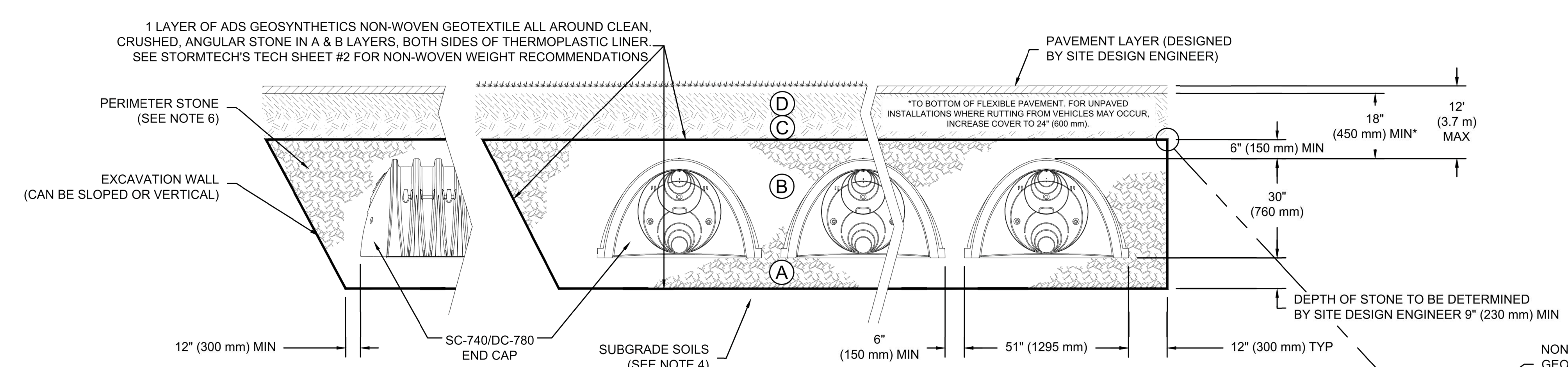

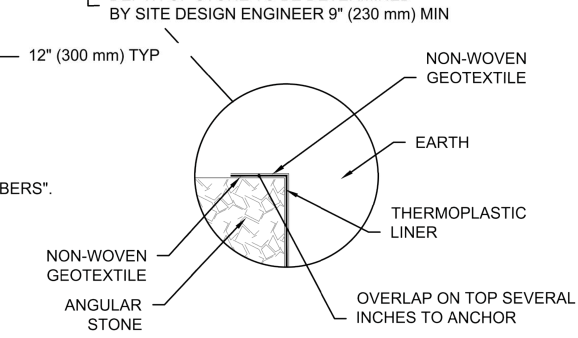

THERMOPLASTIC LINER DETAIL

NOTES:

1. DC-780 CHAMBERS SHALL CONFORM TO THE REQUIREMENTS OF ASTM F2418 "STANDARD SPECIFICATION FOR POLYPROPYLENE (PP) CORRUGATED WALL STORMWATER COLLECTION CHAMBERS".
2. DC-780 CHAMBERS SHALL BE DESIGNED IN ACCORDANCE WITH ASTM F2787 "STANDARD PRACTICE FOR STRUCTURAL DESIGN OF THERMOPLASTIC CORRUGATED WALL STORMWATER COLLECTION CHAMBERS".
3. "ACCEPTABLE FILL MATERIALS" TABLE ABOVE PROVIDES MATERIAL LOCATIONS, DESCRIPTIONS, GRADATIONS, AND COMPACTION REQUIREMENTS FOR FOUNDATION, EMBEDMENT, AND FILL MATERIALS.
4. THE SITE DESIGN ENGINEER IS RESPONSIBLE FOR ASSESSING THE BEARING RESISTANCE (ALLOWABLE BEARING CAPACITY) OF THE SUBGRADE SOILS AND THE DEPTH OF FOUNDATION STONE WITH CONSIDERATION FOR THE RANGE OF EXPECTED SOIL MOISTURE CONDITIONS.
5. PERIMETER STONE MUST BE EXTENDED HORIZONTALLY TO THE EXCAVATION WALL FOR BOTH VERTICAL AND SLOPED EXCAVATION WALLS.
6. ONCE LAYER 'C' IS PLACED, ANY SOIL/MATERIAL CAN BE PLACED IN LAYER 'D' UP TO THE FINISHED GRADE. MOST PAVEMENT SUBBASE SOILS CAN BE USED TO REPLACE THE MATERIAL REQUIREMENTS OF LAYER 'C' OR 'D' AT THE SITE DESIGN ENGINEER'S DISCRETION.

WATTS ENTERPRISES
EDEN, UT
DATE: 7/12/16 | DRAWN: WCM
PROJECT #: 152935 | CHECKED: KMS

StormTech® Detention • Retention • Water Quality
70 INWOOD ROAD, SUITE 3 | ROCKY HILL | CT | 06067
860-529-8188 | 888-892-2694 | WWW.STORMTECH.COM

ADS® ADVANCED DRAINAGE SYSTEMS, INC.
4640 TRUEMAN BLVD
HILLIARD, OH 43026
1-800-733-7473

THIS DRAWING HAS BEEN PREPARED BASED ON INFORMATION PROVIDED TO ADS UNDER THE DIRECTION OF THE SITE DESIGN ENGINEER OR OTHER PROJECT REPRESENTATIVE. THE SITE DESIGN ENGINEER SHALL REVIEW THIS DRAWING PRIOR TO CONSTRUCTION. IT IS THE ULTIMATE RESPONSIBILITY OF THE SITE DESIGN ENGINEER TO ENSURE THAT THE PRODUCT(S) DEPICTED AND ALL ASSOCIATED DETAILS MEET ALL APPLICABLE LAWS, REGULATIONS, AND PROJECT REQUIREMENTS.

SHEET
3 OF 5

Galloway
Planning. Architecture. Engineering.
Trolley Corners Building
515 South 700 East, Suite 3F
Salt Lake City, UT 84102
303.770.8884 O
www.gallowayUS.com

©2015. Galloway & Company, Inc. All Rights Reserved

Watts ENTERPRISES

LICENSED PROFESSIONAL ENGINEER No. 275090 Richard M. Piggott 1/13/17 STATE OF UTAH

WATTS ENTERPRISES
FAIRWAYS AT WOLF CREEK
PHASE 4 & 5

EDEN, UTAH 84310

#	Date	Issue / Description	Init.

Project No:	WAT01.01
Drawn By:	JST
Checked By:	RMP
Date:	1/12/2017

STORM DRAIN DETAILS

DT08

Sheet 24 of 29

DC-780 TECHNICAL SPECIFICATION

NTS

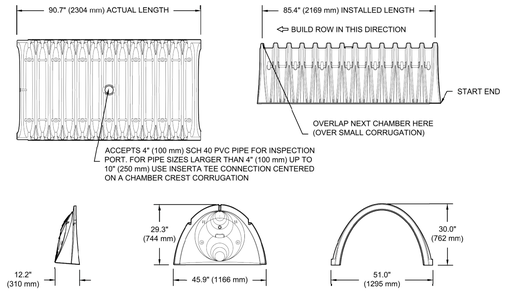

NOMINAL CHAMBER SPECIFICATIONS

SIZE (W X H X INSTALLED LENGTH)	51.0" X 30.0" X 85.4"	(1295 mm X 762 mm X 2169 mm)
CHAMBER STORAGE	46.2 CUBIC FEET	(1.30 m^3)
MINIMUM INSTALLED STORAGE*	78.4 CUBIC FEET	(2.20 m^3)
WEIGHT	75.0 lbs.	(33.6 kg)

*ASSUMES 6" (152 mm) STONE ABOVE, 9" (229 mm) BELOW, AND 6" (152 mm) BETWEEN CHAMBERS

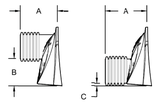

STUBS AT BOTTOM OF END CAP FOR PART NUMBERS ENDING WITH "B"
STUBS AT TOP OF END CAP FOR PART NUMBERS ENDING WITH "T"

PART #	STUB	A	B	C
SC740EPE06T / SC740EPE06TPC	6" (150 mm)	10.9" (277 mm)	18.5" (470 mm)	---
SC740EPE06B / SC740EPE06BPC			---	0.5" (13 mm)
SC740EPE08T / SC740EPE08TPC	8" (200 mm)	12.2" (310 mm)	16.5" (419 mm)	---
SC740EPE08B / SC740EPE08BPC			---	0.6" (15 mm)
SC740EPE10T / SC740EPE10TPC	10" (250 mm)	13.4" (340 mm)	14.5" (368 mm)	---
SC740EPE10B / SC740EPE10BPC			---	0.7" (18 mm)
SC740EPE12T / SC740EPE12TPC	12" (300 mm)	14.7" (373 mm)	12.5" (318 mm)	---
SC740EPE12B / SC740EPE12BPC			---	1.2" (30 mm)
SC740EPE15T / SC740EPE15TPC	15" (375 mm)	18.4" (467 mm)	9.0" (229 mm)	---
SC740EPE15B / SC740EPE15BPC			---	1.3" (33 mm)
SC740EPE18T/ SC740EPE18TPC	18" (450 mm)	19.7" (500 mm)	5.0" (127 mm)	---
SC740EPE18B / SC740EPE18BPC			---	1.6" (41 mm)
SC740EPE24B*	24" (600 mm)	18.5" (470 mm)	---	0.1" (3 mm)

ALL STUBS, EXCEPT FOR THE SC740EPE24B ARE PLACED AT BOTTOM OF END CAP SUCH THAT THE OUTSIDE DIAMETER OF THE STUB IS FLUSH WITH THE BOTTOM OF THE END CAP. FOR ADDITIONAL INFORMATION CONTACT STORMTECH AT 1-888-892-2694.

* FOR THE SC740EPE24B THE 24" (600 mm) STUB LIES BELOW THE BOTTOM OF THE END CAP APPROXIMATELY 1.75" (44 mm). BACKFILL MATERIAL SHOULD BE REMOVED FROM BELOW THE N-12 STUB SO THAT THE FITTING SITS LEVEL.

NOTE: ALL DIMENSIONS ARE NOMINAL

UNDERDRAIN DETAIL

NTS

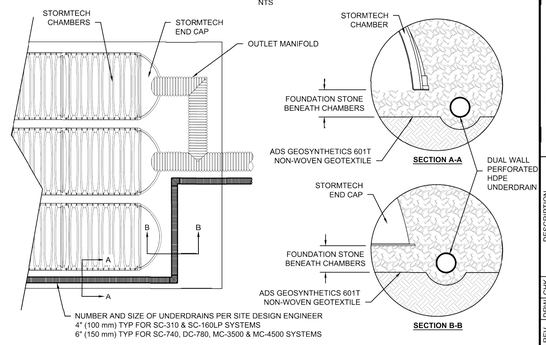

WATT'S ENTERPRISES
EDEN, UT

DATE: 7/12/16 | DRAWN: WCM
PROJECT # : 152935 | CHECKED: KMS

REV	DRW	CHK	DESCRIPTION

Stormtech
Innovative Stormwater Control
70 INNOVATION DRIVE, SUITE 1 OXFORD, CT 06477
866-924-9189 · 888-892-2694 | WWW.STORMTECH.COM

ADS
4640 TRUEMAN BLVD
HILLIARD, OH 43026
1-800-733-7473
CONNECT DIVERSE. ADS SYSTEMS, INC.

THIS DRAWING HAS BEEN PREPARED BASED ON INFORMATION PROVIDED TO ADS UNDER THE DIRECTION OF THE SITE DESIGN ENGINEER OR OTHER PROJECT REPRESENTATIVE. THE SITE DESIGN ENGINEER SHALL REVIEW THIS DRAWING PRIOR TO CONSTRUCTION. IT IS THE ULTIMATE RESPONSIBILITY OF THE SITE DESIGN ENGINEER TO ENSURE THAT THE PRODUCT OFFERED FULFILLS SITE DESIGN REQUIREMENTS AND APPLICABLE LAWS, REGULATIONS, AND PROJECT SPECIFICATIONS.

SHEET
5 OF 5

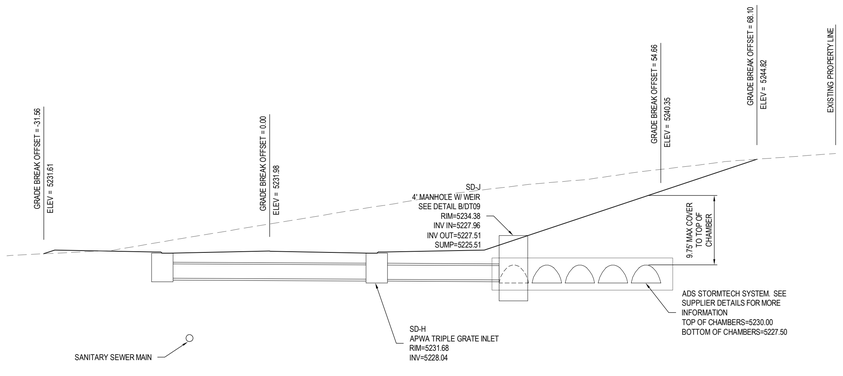

(A) STORM WATER GALLERY CROSS SECTION A-A'

NOT TO SCALE

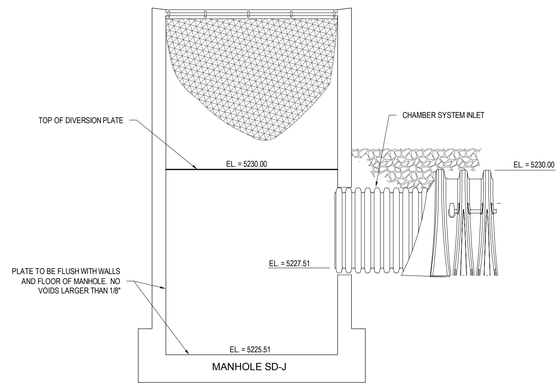

NOTES:
1. DIVERSION PLATE SHALL BE 1/2" HOT DIPPED GALVANIZED STEEL, ALUMINUM OR STAINLESS STEEL HARDWARE SHALL BE GALVANIZED OR STAINLESS STEEL.
2. INSTALL PLATE AT A 45° ANGLE TO THE INLET PIPE SO THAT WATER WILL BE DIVERTED INTO THE EASTERNMOST CHAMBER "ISOLATION ROW".

(B) GALLERY INLET DIVERSION MANHOLE

NOT TO SCALE

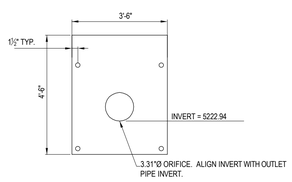

NOTE: ORIFICE PLATE SHALL BE HOT DIPPED GALVANIZED STEEL, ALUMINUM OR STAINLESS STEEL. HARDWARE SHALL BE GALVANIZED OR STAINLESS STEEL.

(C) GALLERY OUTLET ORIFICE PLATE

NOT TO SCALE

Galloway
Planning. Architecture. Engineering.
Trolley Corners Building
515 South 700 East, Suite 3F
Salt Lake City, UT 84102
303.770.8884 O
www.gallowayUS.com

©2015. Galloway & Company, Inc. All Rights Reserved

Watts ENTERPRISES

LICENSED PROFESSIONAL ENGINEER
No. 275600
Richard M. Piggott
1-13-17
STATE OF UTAH

THESE PLANS ARE AN INSTRUMENT OF SERVICE AND ARE THE PROPERTY OF GALLOWAY, AND MAY NOT BE DUPLICATED, DISCLOSED, OR REPRODUCED WITHOUT THE WRITTEN CONSENT OF GALLOWAY. COPYRIGHTS AND INFRINGEMENTS WILL BE ENFORCED AND PROSECUTED.

WATTS ENTERPRISES
FAIRWAYS AT WOLF CREEK
PHASE 4 & 5

EDEN, UTAH 84310

#	Date	Issue / Description	Init.

Project No:	WAT01.01
Drawn By:	JST
Checked By:	RMP
Date:	1/12/2017

STORM DRAIN DETAILS

DT09

Curb and gutter

1. **GENERAL**
   A. Variance from specified dimensions and slopes must be acceptable to the ENGINEER. System configuration may be changed at ENGINEER's discretion.
   B. Additional requirements are specified in APWA Section 32 16 13.

2. **PRODUCTS**
   A. Base Course: Untreated base course, APWA Section 32 11 23. Do not use gravel as a base course without ENGINEER's permission.
   B. Expansion Joint Filler: 1/2-inch thick type F1 full depth, APWA Section 32 13 73.
   C. Concrete: Class 4000, APWA Section 03 30 04. If necessary, provide concrete that achieves design strength in less than 7 days. Use caution; however, as concrete crazing (spider cracks) may develop if air temperature exceeds 90 degrees F.
   D. Concrete Curing Agent: Clear membrane forming compound with fugitive dye (Type ID Class A), APWA Section 03 39 00.

3. **EXECUTION**
   A. Base Course Placement: APWA Section 32 05 10. Thickness is 6-inches if flow-line grade is 0.5 percent (s=0.005) or greater. If slope is less, provide 8-inches. Maximum lift thickness before compaction is 8-inches when using riding equipment or 6-inches when using hand held equipment. Compaction is 95 percent or greater relative to a modified proctor density, APWA Section 31 23 26.
   B. Concrete Placement: APWA Section 03 30 10.
      1) Install expansion joints vertical, full depth, with top of filler set flush with concrete surface. Install at the start or end of a street intersection curb return. Expansion joints are not required in concrete placement using slip-form construction.
      2) Install contraction joints vertical, 1/8-inch wide or 1/4 slab thickness if the slab is greater than 8-inches thick. Match joint location in adjacent Portland-cement concrete roadway pavement.
      3) Provide 1/2-inch radius edges. Apply a broom finish. Apply a curing agent.
   C. Protection and Repair: Protect concrete from deicing chemicals during cure. Repair construction that does not drain. If necessary, fill flow-line with water to verify.

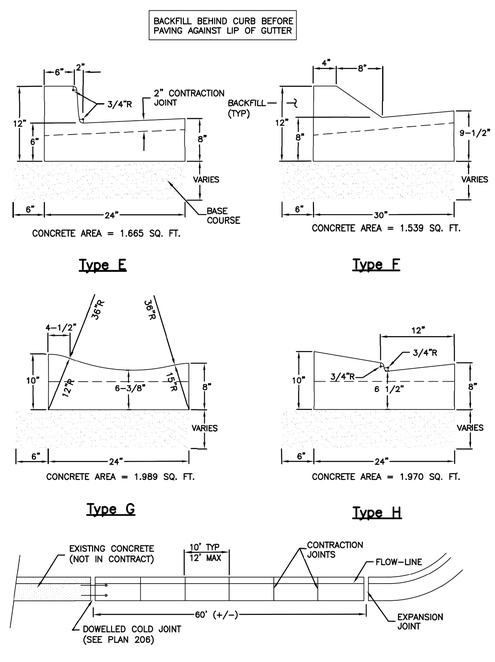

Curb and gutter connection

1. **GENERAL**
   A. Connect new curb and gutter to existing curb and gutter that has not been placed by CONTRACTOR.

2. **PRODUCTS**
   A. Reinforcement: Galvanized or epoxy coated, 60 ksi yield grade steel, ASTM A 615.
   B. Adhesive: Epoxy adhesive grout, APWA Section 03 61 00.
   C. Bond Breaker: Paraffin wax, lithium grease, or other semi-solid, inert lubricant.
   D. Expansion Cap: Plastic, with bar movement allowance of 1/2-inch.

3. **EXECUTION**
   A. Ensure drill rigs (or jigs) are set at mid-depth of the gutter and horizontal to the surface. Make hole size large enough to account for dowel bar and adhesive.
   B. Clean holes and dowel bars of dirt, dust and particles. Ensure coating on bars have no surface defects.
   C. Place bonding agent in the back of each hole so adhesive flows out around each bar fully encasing it. DO NOT apply adhesive to end of the bar and then insert the bar into the hole.
   D. Insert dowels with at least one full turning motion and if necessary, place a grout retention disk on the dowel after insertion to contain adhesive.
   E. Apply complete coverage of bond-breaker on the protruding end of each dowel.
   F. Install expansion caps on protruding dowel bar ends.

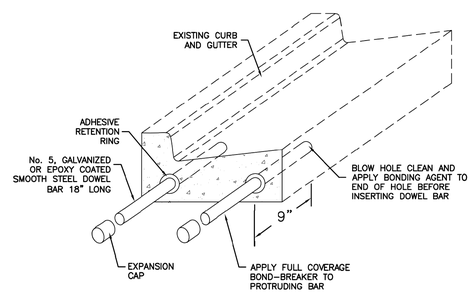

Waterway

1. **GENERAL**
   A. Variance from specified dimensions and slopes must be acceptable to the ENGINEER. System configuration may be changed at ENGINEER's discretion.
   B. Unless indicated otherwise, width of waterway as follows.
      1) 4 feet for a residential street.
      2) 6 feet for a non-residential street.
      3) If wider than 6 feet, offset the flow line in the waterway to match (line up with) the curb and gutter flow line. Adjust cross slopes to match existing slopes.
   C. Additional requirements are specified in APWA Section 32 16 13.

2. **PRODUCTS**
   A. Base Course: Untreated base course, APWA Section 32 11 23. Do not use gravel as a base course without ENGINEER's permission.
   B. Expansion Joint Filler: 1/2-inch thick type F1 full depth, APWA Section 32 13 73.
   C. Concrete: Class 4000, APWA Section 03 30 04. If necessary, provide concrete that achieves design strength in less than 7 days. Use caution; however, as concrete crazing (spider cracks) may develop if air temperature exceeds 90 degrees F.
   D. Reinforcement: Galvanized or epoxy coated, deformed, 60 ksi yield grade steel, ASTM A 615.
   E. Concrete Curing Agent: Clear membrane forming compound with fugitive dye (Type ID Class A), APWA Section 03 39 00.

3. **EXECUTION**
   A. Base Course Placement: APWA Section 32 05 10. Thickness is 6-inches if flow-line grade is 0.5 percent (s=0.005) or greater. If slope is less, provide 8-inches. Maximum lift thickness before compaction is 8-inches when using riding equipment or 6-inches when using hand held equipment. Compaction is 95 percent or greater relative to a modified proctor density, APWA Section 31 23 26.
   B. Concrete Placement: APWA Section 03 30 10.
      1) Install expansion joints vertical, full depth, with top of filler set flush with concrete surface. Expansion joints are not required in concrete placement using slip-form construction.
      2) Install contraction joints vertical, 1/8-inch wide or 1/4 slab thickness if the slab is greater than 8-inches thick. Match joint location in adjacent Portland-cement concrete roadway pavement.
      3) Provide 1/2-inch radius edges. Apply a broom finish. Apply a curing agent.
   C. Protection and Repair: Protect concrete from deicing chemicals during cure. Repair construction that does not drain. If necessary, fill flow-line with water to verify.

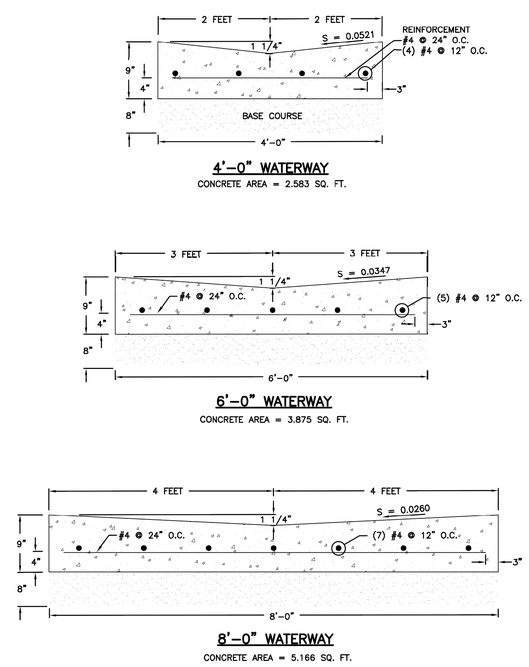

Galloway
Planning. Architecture. Engineering.
Trolley Corners Building
515 South 700 East, Suite 3F
Salt Lake City, UT 84102
303.770.8884 O
www.gallowayUS.com
©2015. Galloway & Company, Inc. All Rights Reserved

Watts ENTERPRISES

LICENSED PROFESSIONAL ENGINEER No. 275600 Richard M. Piggott 1-13-17 STATE OF UTAH

WATTS ENTERPRISES
FAIRWAYS AT WOLF CREEK
PHASE 4 & 5
EDEN, UTAH 84310

#	Date	Issue / Description	Init.

Project No:	WAT01.01
Drawn By:	JST
Checked By:	RMP
Date:	1/12/2017

APWA DETAILS

DT10
Sheet 26 of 29

Waterway transition structure

1. **GENERAL**
   A. Variance from specified dimensions and slopes must be acceptable to the ENGINEER. System configuration may be changed at ENGINEER's discretion.
   B. Additional requirements are specified in APWA Section 32 16 13.

2. **PRODUCTS**
   A. Base Course: Untreated base course, APWA Section 32 11 23. Do not use gravel as a base course without ENGINEER's permission.
   B. Expansion Joint Filler: 1/2-inch thick type F1 full depth, APWA Section 32 13 73.
   C. Concrete. Class 4000, APWA Section 03 30 04. If necessary, provide concrete that achieves design strength in less than 7 days. Use caution; however, as concrete crazing (spider cracks) may develop if air temperature exceeds 90 degrees F.
   D. Reinforcement. Galvanized or epoxy coated, deformed, 60 ksi yield grade steel, ASTM A 615.
   E. Concrete Curing Agent: Clear membrane forming compound with fugitive dye (Type ID Class A), APWA Section 03 39 00.

3. **EXECUTION**
   A. Base Course Placement: APWA Section 32 05 10. Maximum lift thickness before compaction is 8-inches when using riding equipment or 6-inches when using hand held equipment. Compaction is 95 percent or greater relative to a modified proctor density, APWA Section 31 23 26.
   B. Concrete Placement: APWA Section 03 30 10.
      1) Install expansion joints vertical, full depth, with top of filler set flush with concrete surface. Install at the start or end of a street intersection curb return. Expansion joints are not required in concrete placement using slip-form construction.
      2) Install contraction joints vertical, 1/8-inch wide or 1/4 slab thickness if the slab is greater than 8-inches thick. Match joint location in adjacent Portland-cement concrete roadway pavement.
      3) Provide 1/2-inch radius edges. Apply a broom finish. Apply a curing agent.
   C. Protection and repair. Protect concrete from deicing chemicals during cure. Repair construction that does not drain. If necessary, fill flow-line with water to verify.

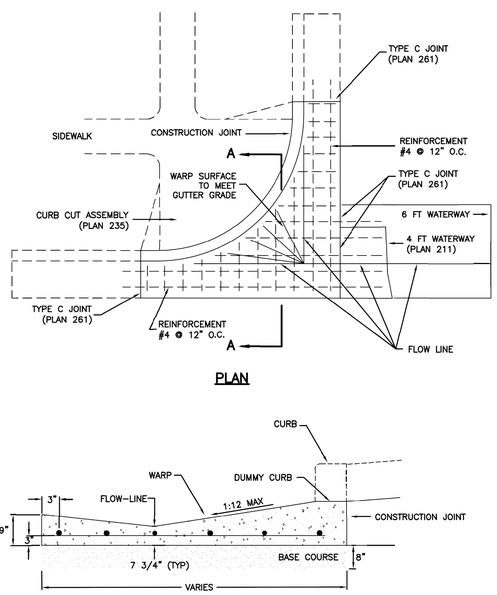

Plan **213**

Waterway transition structure

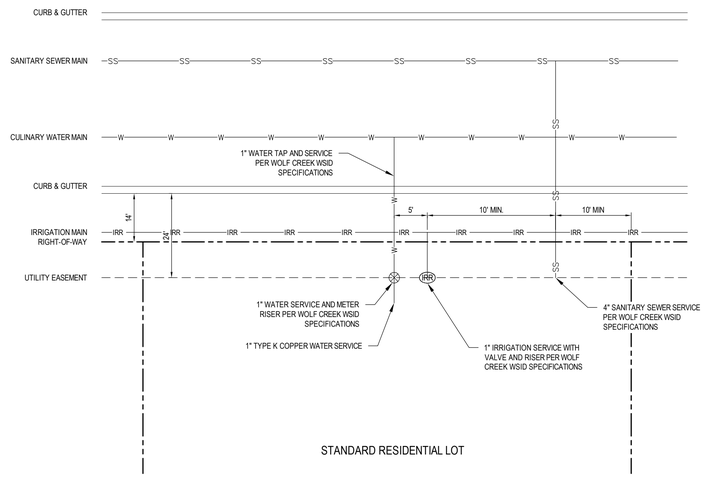

B SERVICE LATERAL DETAIL

NOT TO SCALE

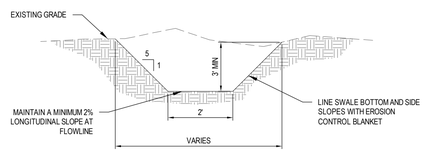

C TRAPEZOIDAL DRAINAGE CHANNEL

NOT TO SCALE

6" Pressure reducing valve with 2" bypass

1. **GENERAL**
   A. Configuration may be changed at ENGINEER's discretion.
   B. Additional requirements are specified in APWA Section 33 12 16.

2. **PRODUCTS**
   A. Small Fillings: Brass. Do not use galvanized materials.
   B. Blocking: Clay brick or concrete block.
   C. Taps: Provide two 3/4" I.P. taps with plugs for pressure gages.
   D. Drain Gravel: Sewer rock, ASTM size no. 3 (2" to 1") or equal, APWA Section 31 05 13.

3. **EXECUTION**
   A. Center frame and cover over water meter.
   B. Apply tape wrap to the exterior of all galvanized pipe per AWWA C209.
   C. Allow 1-inch clearance around waterline where water line passes through concrete box wall. Seal opening with compressible seal.

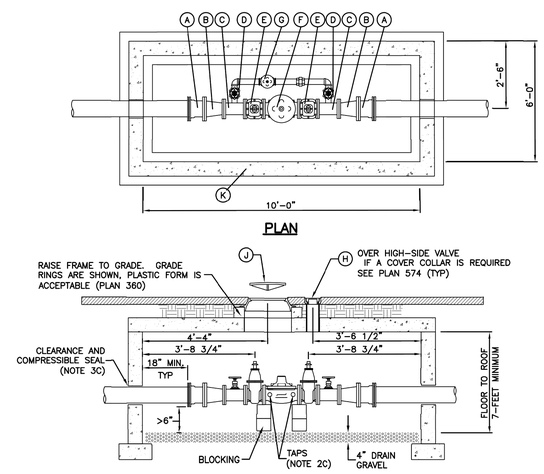

LEGEND

No.	*	ITEM	DESCRIPTION
A		8" M.J.x FLANGE ADAPTOR	CEMENT LINED
B		8" x 6" FLANGED REDUCER	CEMENT LINED
C		8" FLANGED STEEL SPOOL WITH 2" OUTLET	EPOXY COATED AND LINED
D		2" GATE VALVE	
E		6" GATE VALVE WITH 2"x2" OPERATING NUT	
F		6" PRESSURE REDUCING VALVE	
G		2" PRESSURE REDUCING VALVE	
J		27" FRAME AND COVER	PLAN 502
H		TOP SECTION OF VALVE BOX WITH LID	
K		CONCRETE BOX	PLAN 505

* FURNISHED BY AGENCY

Plan **573**

6" Pressure reducing valve with 2" bypass

Galloway
Planning. Architecture. Engineering.
Trolley Corners Building
515 South 700 East, Suite 3F
Salt Lake City, UT 84102
303.770.8884 O
www.gallowayUS.com

©2015. Galloway & Company, Inc. All Rights Reserved

Watts ENTERPRISES

LICENSED PROFESSIONAL ENGINEER No. 275600 Richard M. Piggott 1-13-17 STATE OF UTAH

WATTS ENTERPRISES
FAIRWAYS AT WOLF CREEK
PHASE 4 & 5

EDEN, UTAH 84310

#	Date	Issue / Description	Init.

Project No:	WAT01.01
Drawn By:	JST
Checked By:	RMP
Date:	1/12/2017

SITE DETAILS

DT11

Sheet 27 of 29

Specifications CB0201

ANP Lighting — INNOVATIVE SITE LIGHTING

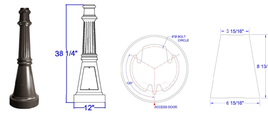

Project: _____
Customer No: _____
Fixture Type: _____
Quantity: _____

Catalog Logic

CB0201-3S8.125 - L R 4 - 4 1

Cast Base and Shaft | Accessory | Finish

CB0201

Weight: 23 lbs
Anchor Bolts: 3

1		2 See Page 2		3 See Page 2
	–		–	

1

Additional heights and pole diameters may be available. Contact factory for your specific needs. Anchor Bolts: 3 • Cast Base Weight: 23 lbs.

Shaft Diameter	Finished Height	Wall Thickness	Smooth Shaft Order No.	Fluted Shaft Order No.
3"	10'	.125	CB0201-3S10.125	CB0201-3F10.125
3"	11'	.125	CB0201-3S11.125	–
3"	12'	.125	CB0201-3S12.125	–
3"	12'	.188	CB0201-3S12.188	–
3"	13'	.188	CB0201-3S13.188	–
4"	10'	.125	CB0201-4S10.125	–
4"	11'	.125	CB0201-4S11.125	–
4"	12'	.125	CB0201-4S12.125	–
4"	13'	.125	CB0201-4S13.125	–
4"	14'	.125	CB0201-4S14.125	
4"	10'	.188		CB0201-4F10.188
4"	11'	.188	–	CB0201-4F11.188
4"	12'	.188	CB0201-4S12.188	CB0201-4F12.188
4"	13'	.188		CB0201-4F13.188
4"	14'	.188	CB0201-4S14.188	CB0201-4F14.188

© 2014 ANP Lighting. All rights reserved. These specifications are intended for general purposes only.
ANP reserves the right to change material or design, without prior notice, in a continuing effort to upgrade its products.
1-800-548-3227
ANPlighting.com

Specifications CB0201

ANP Lighting — INNOVATIVE SITE LIGHTING

2 POLE ACCESSORIES

- BAA-Banner Arm A
- BAB-Banner Arm B
- BAC-Banner Arm C
- GFI-GFI Receptacle/WP Cover
- GFIWP-GFI Receptacle/In-Use WP Cover
- LR1-Ladder Rest 1
- LR3-Ladder Rest 3
- LR4-Ladder Rest 4
- LR5-Ladder Rest 5
- Sign A (YOUR SIGN)
- Sign B (YOUR SIGN)
- Sign C (YOUR SIGN)
- Sign D
- FPH1-Flag Pole Holder
- TP-Tamper Proof Screws

3 FINISHES

* Std. = Standard Grade, Marine = Marine Grade

*Std.	*Marine		*Std.	*Marine	
40	NA	Raw Unfinished	53	110	Copper Clay
41	101	Black	56	109	Silver
42	102	Forest Green	61	106	Black Verde
43	114	Bright Red	70	118	Painted Chrome
44	107	White	71	105	Painted Copper
45	112	Bright Blue	72	108	Textured Black
46	123	Sunny Yellow	73	125	Matte Black
47	120	Aqua Green	76	121	Textured Architectural Bronze
49	NA	Galvanized	77	127	Textured White
50	111	Navy	78	124	Textured Silver
51	103	Architectural Bronze	10	130	Aspen Green
52	104	Patina Verde	11	131	Cantaloupe
12	133	Lilac	13	132	Putty

Consult factory for additional paint charges and availability.

Pole foundations: ANP does not provide designs or recommendations of foundations for poles.

Pole Disclaimer: Pole heights, wall thickness, and bases are designed to withstand nominal luminaries and cross arm configurations. Consult factory for your specific requirements.

Typical Specifications: Unless otherwise noted, pole bases and base plates shall be cast from 356 aluminum alloy. • Round straight or tapered smooth shafts shall be seamless extruded 6061-T6 aluminum. • Round straight fluted shafts shall be extruded 6063-T6 aluminum. • Round tapered fluted shafts shall be formed from spun seamless 6063 aluminum or 356 cast aluminum.

Anchor Bolts: Anchor bolts, nuts and washers shall be hot dipped galvanized steel. • Bolt circle templates will be provided upon request. • Standard anchor bolt sizes are 1/2" x 18" x 4" L Bolt and/or 3/4" x 18" x 4" L Bolts. FREIGHT/INCIDENTAL CHARGES INCURRED BY SHIPPING ANCHOR BOLTS AND BOLT PATTERN TEMPLATES PRIOR TO ORDER SHIPMENT ARE DONE SOLEY AT CUSTOMER EXPENSE AND WILL BE BILLED AS SEPARATE FREIGHT CHARGE REGARDLESS OF ORDER SIZE.

Note: All poles shall be provided with hand access opening and cover. • Hand hole cover shall be secured by (2) stainless steel machine screws. (Tamper-proof **screws provided upon request.)**

Grounding: All poles shall be provided with aluminum grounding lug integrated to inner wall of shaft, 180 degrees to hand hole. Grounding lug will be drilled and tapped to accommodate ¼-20 stainless steel machine screw.

© 2014 ANP Lighting. All rights reserved. These specifications are intended for general purposes only.
ANP reserves the right to change material or design, without prior notice, in a continuing effort to upgrade its products.
1-800-548-3227
ANPlighting.com

Specifications PA175

ANP Lighting — INNOVATIVE SITE LIGHTING

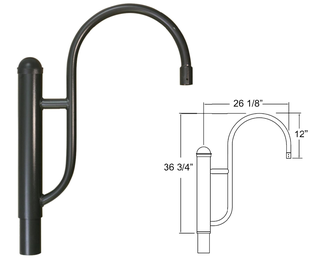

Project: _____
Fixture Type: _____ Quantity: _____
Customer: _____

Weight: 5 lbs
EPA: 1.31

Specifications

General: Due to size or weight, arm mounts may not accommodate all ANP luminaires.

Material: All parts are durable 356 cast aluminum and high strength extruded aluminum. All mounting hardware shall be stainless steel or zinc plated steel.

Fixture Mounting: Pin mount to tenon.

Post Arm Mounting: Slip tenon to accomodate 3", 4" and 5" pole.

Electrical: Pull wire provided.

Modifications: Consult factory for custom or modified arms.

PA175 - POST ARM

Extruded aluminum post arm for pendant fixture.

Catalog Logic

PA175 - 3 - 4 - N/A - 72

Post Arm Style | Pendant Post | Number of Arms | Center Mount | Finish

Catalog Number

1	2	3	4
PA175 –	–	– N/A	–

1 Arm Configuration | 2 Arm Configuration | 3 Arm Configuration | 4 Arm Configuration

1 POST ARM ORIENTATION

3- Pendant

2 NUMBER OF ARMS

1- One Arm Configuration
2- Two Arm Configuration
3- Three Arm Configuration
4- Four Arm Configuration

3 CENTER MOUNT OPTIONS

N/A

4 FINISHES

Standard Grade	Marine Grade		Standard Grade	Marine Grade	
40	NA	Raw Unfinished	53	100	Copper Clay
41	101	Black	56	109	Silver
42	102	Forest Green	61	106	Black Verde
43	114	Bright Red	70	118	Painted Chrome
44	107	White	71	105	Painted Copper
45	112	Bright Blue	72	108	Textured Black
46	123	Sunny Yellow	73	125	Matte Black
47	120	Aqua Green	76	121	Textured Architectural Bronze
49	NA	Galvanized	77	127	Textured White
50	111	Navy	78	124	Textured Silver
51	103	Architectural Bronze	10	130	Aspen Green
52	104	Patina Verde	11	131	Cantaloupe
12	133	Lilac	13	132	Putty

Consult factory for additional paint charges and availability

© 2016 ANP Lighting. All rights reserved. These specifications are intended for general purposes only.
ANP reserves the right to change material or design, without prior notice, in a continuing effort to upgrade its products.
1-800-548-3227
ANPlighting.com

Specifications BVF1801

ANP Lighting — INNOVATIVE SITE LIGHTING

Project: _____
Customer No: _____
Fixture Type: _____
Quantity: _____

Weight:
EPA:

Catalog Logic

BVF1801 P078LD4 N T5 40K PC 72

Style | Wattage/Catalog # | Dimming/ No Dimming | Optic | CCT | Accessory | Finish

BVF1801

This Bella Vista fixture is a 18" flared shade made of heavy gauge spinnings with a heavy duty cast aluminum top dome. Dark Sky Compliant.

BVF1801 –	1	2	3	4	5	6

1 WATTAGE / CATALOG # — PLATFORM

46w	P046LD4
78w	P078LD4
117w	P117LD4

2 DIMMING or No DIMMING

N (No Dimming)
D (Dimming)

3 OPTICS — PLATFORM

T2 (Type II)
T3 (Type III)
T5 (Type V)

4 COLOR TEMPERATURE (CCT) — PLATFORM

CCT	Catalog #
2700K	27K
3500K	35K
4000K	40K
5000K	50K

5 ACCESSORIES

HSS (House side shield is made from polished aluminum for high reflectivity with 120 degree light blockage)
PC (Button Photo Cell)
EMG (Emergency Backup Ballast - remote placement)

6 FINISH

* Std. = Standard Grade, Marine = Marine Grade

*Std.	*Marine		*Std.	*Marine	
40	NA	Raw Unfinished	53	110	Copper Clay
41	101	Black	56	109	Silver
42	102	Forest Green	61	106	Black Verde
43	114	Bright Red	70	118	Painted Chrome
44	107	White	71	105	Painted Copper
45	112	Bright Blue	72	108	Textured Black
46	123	Sunny Yellow	73	125	Matte Black
47	120	Aqua Green	76	121	Textured Architectural Bronze
49	NA	Galvanized	77	127	Textured White
50	111	Navy	78	124	Textured Silver
51	103	Architectural Bronze	10	130	Aspen Green
52	104	Patina Verde	11	131	Cantaloupe
12	133	Lilac	13	132	Putty

Consult factory for additional paint charges and availability

LED PERFORMANCE — PLATFORM

LED Wattage	CCT	Lumens	System Wattage	Efficacy
46w	2700K	3450	46w	80
46w	3500K	3910	46w	85
46w	4000K	5014	46w	109
46w	5000K	5290	46w	115
78w	2700K	6000	80w	80
78w	3500K	6800	80w	85
78w	4000K	8720	80w	109
78w	5000K	9200	80w	115
117w	2700K	9000	120w	80
117w	3500K	10200	120w	85
117w	4000K	13080	120w	109
117w	5000K	13920	120w	119

© 2014 ANP Lighting. All rights reserved. These specifications are intended for general purposes only.
ANP reserves the right to change material or design, without prior notice, in a continuing effort to upgrade its products.
1-800-548-3227
ANPlighting.com

Specifications BVF1801

ANP Lighting — INNOVATIVE SITE LIGHTING

PLATFORM SPECIFICATION:

- Efficacy ranges from 80-115 lumens per watt
- Customized lens precisely directs the light
- Operating temperature of -30C to 55C
- Dimmable 10% - 100%
- Life: L70 60,000 hours
- Color temp: 2700k, 3500k 4000k and 5000k
- CRI: >70 @ 5,000K
- Parallel circuitry ensures consistent light output in the event of single LED failure
- 7 year limited Warranty*

PLATFORM DRIVER SPECIFICATION:

- Operates at 400mA
- Built in surge protection
- Constant current output 50/60HZ
- Driver Efficiency>90% power factor above 99%
- 120-277 volts
- 5 year limited Warranty*

PLATFORM Listings

- Fully compliant with the RoHS Directive
- Certifications: ETL
- Rated IP65 rated with an optional IP66 rating

Project: _____
Customer No: _____
Fixture Type: _____
Quantity: _____

WARRANTY

See terms and conditions for complete fixture warranty.

*LED warranty information
A typical year is defined as 4380 hours of operation.
Failure defined as more than 8% of the total platform not operating.

The Colors of ANP Lighting

All of our products are painted at a TIGER Drylac® approved facility, and are finished in our polyester powder coat for exceptional durability and color retention. Products undergo an intensive five-step process in which they are cleansed, treated with iron phosphate, and sealed to pre-treat the metal surface for maximum paint adhesion. Whether applied as a textured coat or a smooth gloss, our high quality finish is electro-statically applied and baked at 430° for maximum hardness and wear. The end result is a tough, attractive, durable, scratch resistant, and cost-effective product.

Optional Marine Grade Finish

For lighting fixtures exposed to more extreme conditions, such as those found in coastal regions or industrial environments, we offer a marine grade finish that provides superior salt, humidity, and UV protection. This specialty powder coating, available for an additional charge, withstands up to 3000 hours of continuous salt spray, comes with a 5-year warranty and is available in either a textured or gloss surface. Consult with our factory for additional paint charges.

—

OPTICS

T2 (Type II)

T3 (Type III)

T5 (Type V)

ACCESSORIES

HSS (House side shield is made from polished aluminum for high reflectivity with 120 degree light blockage)

PC (Photo Cell)

EMG (Emergency Back-up ballast – remote placement)

© 2014 ANP Lighting. All rights reserved. These specifications are intended for general purposes only.
ANP reserves the right to change material or design, without prior notice, in a continuing effort to upgrade its products.
1-800-548-3227
ANPlighting.com

Street name signpost

1. **GENERAL**
   A. Get ENGINEER's approval of sign format and installation.
2. **PRODUCTS**
   A. Bolts, Nuts, Washers, Accessories: Stainless or galvanized steel, APWA Section 05 05 23.
3. **EXECUTION**
   A. Install sign posts on corner selected by ENGINEER.
   B. Install the edge of the sign 2 feet from the vertical extension of the back of curb as near as possible to the approach curb P.C. (point of curvature).

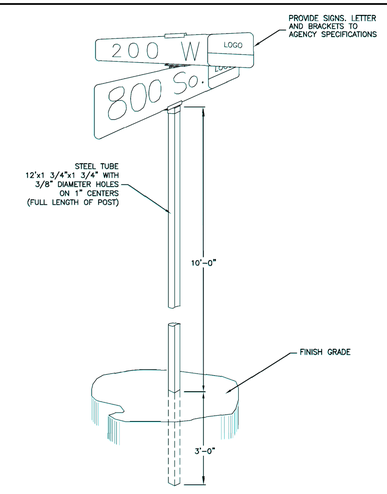

April 1997 — 125 — ***Street name signpost*** — Plan **292**

Galloway
Planning. Architecture. Engineering.
Trolley Corners Building
515 South 700 East, Suite 3F
Salt Lake City, UT 84102
303.770.8884 O
www.gallowayUS.com
©2015. Galloway & Company, Inc. All Rights Reserved

Watts ENTERPRISES

LICENSED PROFESSIONAL ENGINEER No. 275600 Richard M. Piggott 1-12-17 STATE OF UTAH

WATTS ENTERPRISES
FAIRWAYS AT WOLF CREEK
PHASE 4 & 5

EDEN, UTAH 84310

#	Date	Issue / Description	Init.

Project No:	WAT01.01
Drawn By:	JST
Checked By:	RMP
Date:	1/12/2017

STREET LIGHT DETAILS

DT12

Sheet 28 of 29

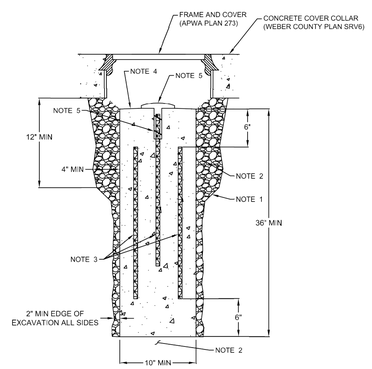

1. EXCAVATION: Call Blue Stakes before excavating and installing monument. Install monument only after cleared by all Blue Stakes. Over excavate the top 12" of the monument hole to a diameter of 18" min (or 4" wider than the diameter of the monument) for the installation of free draining material to drain water out of the monument box.
2. BACKFILL: Tamp and compact bottom of excavated hole to ensure solid base before placement of monument. Tamp and compact ¾" min to ¾" max uniform free draining material into the void of the excavation on all sides of the monument with hand held equipment per APWA Section 32 05 10.
3. REINFORCEMENT: #5 (⅝" diameter) galvanized or epoxy coated, deformed, 60 ksi yield grade steel, ASTM A 615.
4. CONCRETE: Finish concrete with a dome or slope to prevent water collection and puddling around the cap. Class 4000 per APWA Section 03 30 04.
5. CAP: Attach cap (Berntsen C35DB or equivalent*) to steel rebar with wire, clamp, or other approved device. Monument cap shall be centered in the monument base. Install cap in monument base before concrete sets. The center of the cap shall not exceed 0.04' (Approx. ½"), in any direction, of the actual position of the monument.

* Cap to be provided to the contractor, by the county, on county funded projects. Equivalent products shall be approved by the County Surveyor prior to construction. The Weber County Surveyor's Office may have caps on hand and available for purchase to be used on privately funded projects. Contact the Surveyor's Office for availability and pricing.

July 2016

SUB-SURFACE MONUMENT

PLAN
SRV5
WEBER COUNTY
PUBLIC WORKS
STANDARDS

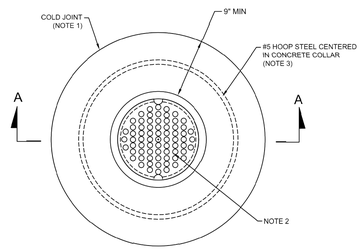

PLAN

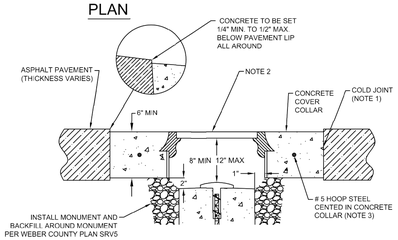

SECTION A - A

1. JOINT: Provide a neat vertical and concentric joint between concrete and existing asphalt surface. Clean edges of all dirt, oil, and loose debris.
2. FRAME AND COVER: Install traffic rated frame and cover (APWA Plan 273*) on top of a 12" IDA SONO Tube or PVC Pipe cut to the appropriate size to ensure top of frame and cover will be level with concrete collar. Frame and cover to be centered over and independent to the monument.
3. REINFORCEMENT: Install #5 (⅝" diameter) galvanized or epoxy coated hoop, deformed, 60 ksi yield grade steel, ASTM A 615.
4. CONCRETE PLACEMENT: APWA Section 03 30 10. Fill annular space around frame and cover with class 4000 concrete per APWA Section 03 30 04. A fiber mesh additive per ASTM 1116 may be added to the concrete mix instead of the hoop of steel. Apply a broom finish. Apply a curing agent.
5. CURING AGENT: Clear membrane forming compound with fugitive dye (Type ID Class A), APWA Section 03 39 00.

* Frame and Cover to be provided to the contractor, by the county, on county funded projects. Equivalent products shall be approved by the County Surveyor prior to construction. The Weber County Surveyor's Office may have Frames and Covers on hand and available for purchase to be used on privately funded projects. Contact the Surveyor's Office for availability and pricing.

July 2016

COVER COLLAR FOR SURVEY MONUMENTS

PLAN
SRV6
WEBER COUNTY
PUBLIC WORKS
STANDARDS

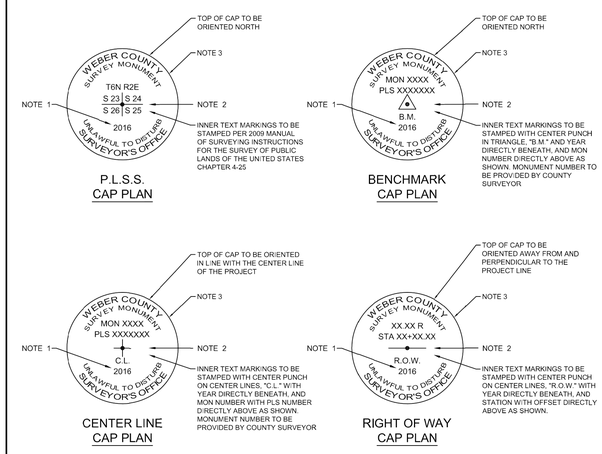

1. DATE: Stamp the full year of the date when the monument was constructed.
2. SYMBOL AND CENTER PUNCH: Apply a center punch at the actual surveyed position for the monument. Center punch of the surveyed position shall be within 0.04' (Approx. ½") of the center of the cap.
3. OUTER TEXT: Caps shall be brass or bronze. Text along outer edges of cap shall be pre-stamped.

July 2016

MONUMENT CAP PLANS

PLAN
SRV7
WEBER COUNTY
PUBLIC WORKS
STANDARDS

Galloway
Planning. Architecture. Engineering.
Trolley Corners Building
515 South 700 East, Suite 3F
Salt Lake City, UT 84102
303.770.8884 O
www.gallowayUS.com

©2015. Galloway & Company, Inc. All Rights Reserved

Watts ENTERPRISES

LICENSED PROFESSIONAL ENGINEER
No. 275600
Richard M. Piggott
1-13-17
STATE OF UTAH

WATTS ENTERPRISES
FAIRWAYS AT WOLF CREEK
PHASE 4 & 5

EDEN, UTAH 84310

#	Date	Issue / Description	Init.

Project No:	WAT01.01
Drawn By:	JST
Checked By:	RMP
Date:	1/12/2017

MONUMENT DETAILS

DT13

Sheet 29 of 29