TAYLOR LANDING PHASE 1B

A CLUSTER SUBDIVISION

PART OF THE NORTH HALF OF SECTION 28, TOWNSHIP 6 NORTH,
RANGE 2 WEST,
SALT LAKE BASELINE AND MERIDIAN
WEBER COUNTY, TAYLOR, UTAH

INDEX SHEET

PROJECT

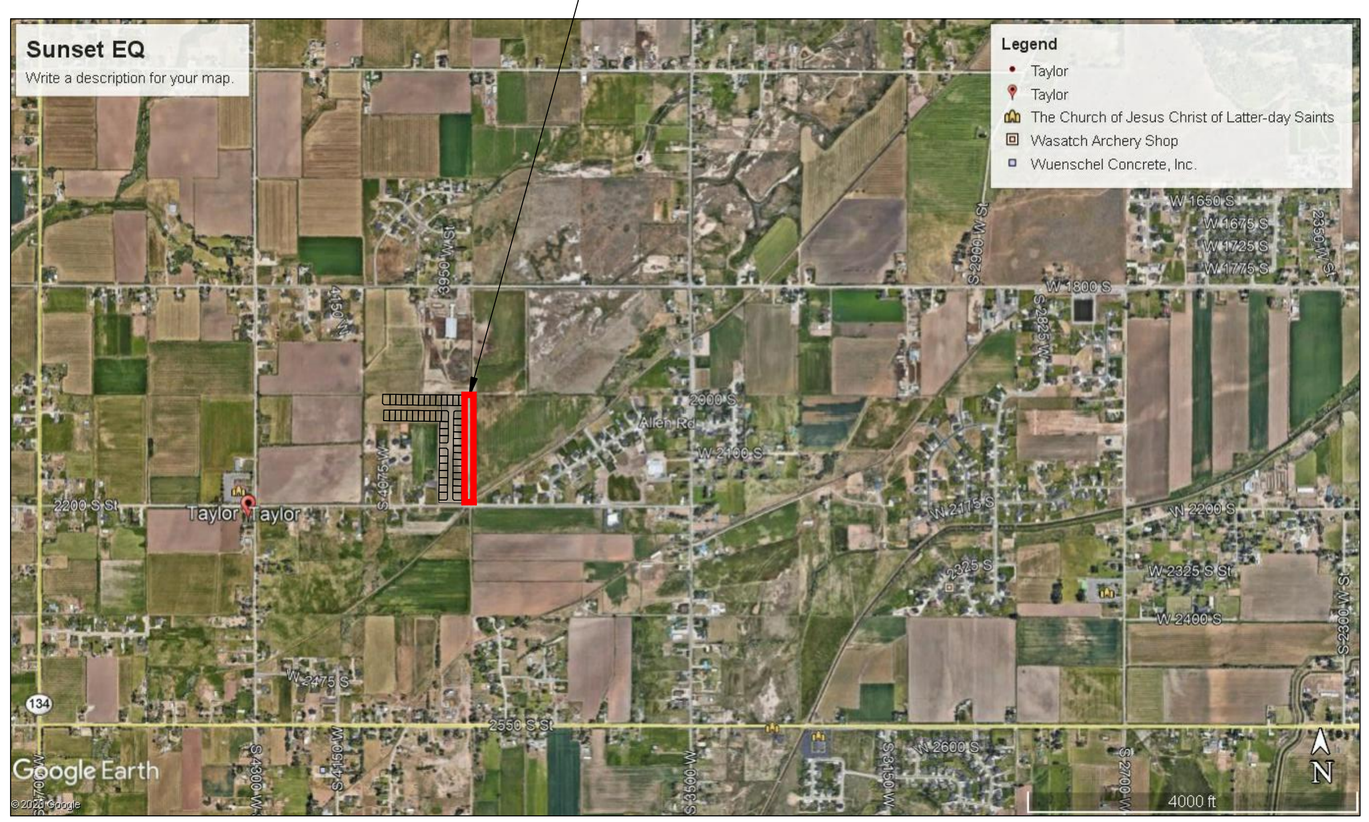

VICINITY MAP

OWNER/DEVELOPER
HERITAGE LAND DEVELOMENT
ATTN: SELVOY FILLERUP

CIVIL ENGINEER
ALLIANCE CONSULTING ENGINEERS, INC.
150 EAST 200 NORTH SUITE P
LOGAN, UTAH 84321
435-755-5121

SHEET INDEX

SHEET NO.	SHEET DESCRIPTION
1	INDEX SHEET
2	ROAD CONSTRUCTION PLAN
3	IRRIGATION RE-ROUTE
4	GRADING/DRAINAGE PLAN
5	DETAILS
6	DETAILS

GENERAL NOTES (APPLICABLE TO ALL CIVIL SHEETS):

1. ALL CONSTRUCTION AND MATERIALS SHALL BE IN ACCORDANCE WITH THE PROJECT SPECIFICATIONS, WEBER COUNTY STANDARDS, STATE OF UTAH AND ANY OTHER APPLICABLE STANDARDS ISSUED BY THE CONTROLLING AGENCY.

2. CONTRACTOR SHALL FIELD VERIFY ALL DIMENSIONS BEFORE CONSTRUCTION. ANY DISCREPANCIES BETWEEN CONSTRUCTION DOCUMENTS AND FIELD CONDITIONS SHALL IMMEDIATELY BE BROUGHT TO THE ATTENTION OF THE OWNER. ANY WORK COMPLETED WITHOUT DOING SUCH IS DONE SO AT THE CONTRACTORS EXPENSE.

3. CONTRACTOR SHALL REPAIR AND/OR REPLACE ANY AREAS AND/OR MATERIALS DAMAGED DURING CONSTRUCTION.

4. CONTRACTOR SHALL MAINTAIN ALL ADJACENT PROPERTY (PUBLIC & PRIVATE) FROM ALL CONSTRUCTION DEBRIS.

5. CONTRACTOR SHALL PROVIDE SMOOTH TRANSITION FROM ALL NEW CONSTRUCTION TO EXISTING CONDITIONS.

6. CONTRACTOR SHALL PROVIDE ALL NECESSARY AUTOMOBILE AND PEDESTRIAN TRAFFIC CONTROL DEVICES REQUIRED BY LOCAL, STATE, AND FEDERAL CODES AND ORDINANCES.

7. CONTRACTOR SHALL REPLACE SURVEY MONUMENTS DAMAGED DURING CONSTRUCTION. SURVEY MONUMENTS TO BE REPLACED BY A REGISTERED, LICENSED LAND SURVEYOR.

8. CONTRACTOR TO LOCATE ALL EXISTING UTILITIES, INCLUDING FIBER OPTIC. ANY DAMAGES TO EXISTING UTILITIES WILL BE REPAIRED AT CONTRACTORS EXPENSE.

9. DIMENSIONS SHOWN ARE TO THE CENTER OF THE PIPELINE UNLESS OTHERWISE NOTED.

10. DISTANCES SHOWN ALONG PIPELINES ARE HORIZONTAL DISTANCES AND NOT ACTUAL PIPE LENGTHS. MORE PIPE MAY BE REQUIRED TO COMPLETE CONSTRUCTION THAN IS DIMENSIONED IN THE PLANS.

11. CONTRACTOR IS REQUIRED TO HAVE A SET OF PLANS ON THE SITE AT ALL TIMES. ANY WORK COMPLETED WITHOUT A SET PRESENT IS DONE SO AT THE CONTRACTORS RISK AND EXPENSE IF ERRORS OCCUR.

12. CONTRACTOR IS RESPONSIBLE FOR PROVIDING WATER NECESSARY FOR DUST ABATEMENT, COMPACTION, ETC.

13. THE CONTRACTOR SHALL BE RESPONSIBLE FOR SECURING SOURCES FOR GRANULAR MATERIALS, WATER, WASTE SITES, AND ANY OTHER MATERIALS SOURCES AS REQUIRED FOR PROJECT COMPLETION.

14. ANY WORK DONE WITHIN A PUBLIC RIGHT-OF-WAY SHALL BE COORDINATED WITH THE APPROPRIATE TRANSPORTATION AGENCY AND SHALL MEET THE REQUIREMENTS OF THAT AGENCY AND THE REQUIREMENTS OF ANY RIGHT-OF-WAY OR SPECIAL USE PERMITS.

15. ALL CULINARY WATER MATERIALS AND CONSTRUCTION SHALL MEET TWWWID STANDARDS AND SPECIFICATIONS. THE CONTRACTOR SHALL COORDINATE ALL LIVE TAPS AND ANY OTHER WORK OR MANIPULATION OF THE EXISTING WATER SYSTEM WITH THE TAYLOR-WEST WEBER WATER IMVPROVEMENT DISTRICT, 24 HOURS IN ADVANCE OF AN PRE-CONSTRUCITON MEETING AND CONSTRUCTION ACTIVITY. 801-731-1668.

16. ON SLOPING AREAS THE CONTRACTOR SHALL TAKE PRECAUTIONS TO MITIGATE ANY POSSIBLE EROSION PROBLEMS IN THE TRENCHES DUE TO STORM WATER THAT MIGHT OCCUR DURING OR AFTER CONSTRUCTION AS DIRECTED OR APPROVED BY ENGINEER.

17. THE CONTRACTOR SHALL INSTALL AND MAINTAIN ALL EROSION CONTROL MEASURES AS DETAILED IN THE PROJECT PLANS UNTIL FINAL ACCEPTANCE OF THIS PROJECT.

18. THE CONTRACTOR IS REQUIRED TO TAKE ALL PRECAUTIONS NECESSARY TO INSURE THAT NO STORM WATER/SEDIMENT AND/OR CONSTRUCTION DEBRIS ARE RELEASED FROM THE SITE. ANY RELEASES SHALL BE CLEANED AND MITIGATED AT THE CONTRACTOR'S EXPENSE.

19. CONTRACTOR SHALL COORDINATE ALL CONSTRUCTION ACCESS AND RELATED TRAFFIC CONTROL WITH THE COUNTY, CITY, AND STATE ROADWAY DEPARTMENTS. THE ENGINEER SHALL REVIEW ALL TRAFFIC CONTROL PLANS.

20. CONTRACTOR SHALL PROVIDE ALL NECESSARY FITTINGS, HARDWARE, LABOR, ETC. TO CONSTRUCT VERTICAL AND HORIZONTAL BENDS IN PIPE AS NEEDED TO MEET THE REQUIRED GRADES, ALIGNMENTS AND COVER REQUIREMENTS.

21. ALL AIR RELEASE VALVES SHALL BE INSTALLED AT THE CREST OF THE VERTICAL CURVATURE OF THE WATER LINE. CONTRACTOR SHALL RECORD ACTUAL LOCATION OF VALVES ON FIELD RECORD DRAWINGS.

22. THE CONTRACTOR SHALL COORDINATE WITH WEBER COUNTY FOR ALL UTILITY INSPECTIONS PRIOR TO BACKFILLING.

23. ALL WATER SYSTEM COMPONENTS SHALL BE INSTALLED, PRESSURE TESTED, AND CHLORINATED PRIOR TO COMPLETING ANY ROADWAY CONSTRUCTION.

24. ALL WORK ON THE SECONDARY WATER SYSTEM IS TO BE DONE IN ACCORDANCE WITH HOOPER IRRIGATION COMPANY STANDARDS.

COUNYT ENGINEER'S CERTIFICATE OF APPROVAL

I hereby approve the above plat having reviewed it for conformity with standard engineering practice and County's Subdivision Ordinance

_____ Date

_____ Weber County Engineer

REGISTERED PROFESSIONAL ENGINEER
NO.368590
Adam Mackelprang
ADAM MACKELPRANG
4-21-2025
STATE OF UTAH
SEAL

ALLIANCE CONSULTING ENGINEERS
150 EAST 200 NORTH SUITE P
LOGAN, UTAH 84321
(435)755-5121
allianceengr@qwestoffice.net

CONFIDENTIALITY AND COPYRIGHT NOTICE
UNAUTHORIZED USE, DISCLOSURE, OR COPYING OF THIS DRAWING IS PROHIBITED.
CONSTRUCTION DOCUMENTS THAT ARE DISTRIBUTED FOR BIDDING PURPOSES SHALL NOT BE RETURNED AND SHALL BE DESTROYED WITHIN 30 DAYS AFTER THE BID OPENING BY THE PLAN HOLDER.
COPYRIGHT 2005

No.	REVISIONS / SUBMISSIONS	DATE

REVIEWED : DRAWN :
CAD FILE : PROJECT NO. :

TAYLOR LANDING PHASE 1B
A CLUSTER SUBDIVISION

DRAWING TITLE
INDEX SHEET

DATE : MARCH,2025

DRAWING No.
1

TAYLOR LANDING PHASE 1B

A CLUSTER SUBDIVISION

PART OF THE NORTH HALF OF SECTION 28, TOWNSHIP 6 NORTH, RANGE 2 WEST,
SALT LAKE BASELINE AND MERIDIAN
WEBER COUNTY, TAYLOR, UTAH

ROAD CONSTRUCTION PLAN

0 30 60 120

SCALE: 1"= 60' (24x36 PLAN SET)
SCALE: 1"= 10'_VERTICAL

Notes:
1. All ADA ramps to include truncated domes grey in color. See APWA plan 235.1 example B unless there are special circumstances. Contractor to refer to previous phases for examples.
2. All work on the secondary water system is to be done in accordance with Hooper Irrigation Company Standards

	BOUNDARY LINE
	LOT LINE
	CENTERLINE
	EXISTING FENCE
	EXISTING DITCH
E 8 C900 WTR	EXISTING WATER AS NOTED
8 C-900 WTR	PROPOSED 8" PVC C-900 DR 18 WATER
W	PROPOSED 1" CTS 200 PSI POLY WATER SERVICE
E 30-CONC-SWR	EXISTING SEWER AS NOTED
8 PVC SEWER	PROPOSED 8" SDR 35 SEWER AS NOTED –SLEEVE PER NOTE#3 WHERE SHOWN
10 PVC SEWER	PROPOSED 10" SDR 35 SEWER AS NOTED
S	PROPOSED 4" SEWER LATERAL
E 12 DI IRR	EXISTING 12" DI IRRIGATION
8 IRR	PROPOSED 8" PVC C-900 DR18 IRRIGATION MAIN, PURPLE PIPE WITH LOCATOR TAPE AND 14GA LOCATOR WIRE
12 IRR	PROPOSED 12" PVC C-909 DR18 IRRIGATION MAIN, PURPLE PIPE WITH LOCATOR TAPE AND 14GA LOCATOR WIRE
I	PROPOSED IRRIGATION SERVICE PER HOOPER IRRIGATION COMPANY (see PI-10 hooper irrigation, double service unless otherwise noted)
15 E ADS SD	EXISTING STORM SYSTEM
15 RCP SD	PROPOSED STORM SYSTEM AS NOTED
	EXISTING MAJOR CONTOUR (5')
	EXISTING MINOR CONTOUR (1')
	PROPOSED MAJOR CONTOUR (2.5')
	PROPOSED MINOR CONTOUR (0.5')
	EXISTING ASPHALT
	PROPOSED ASPHALT
	PROPOSED CONCRETE

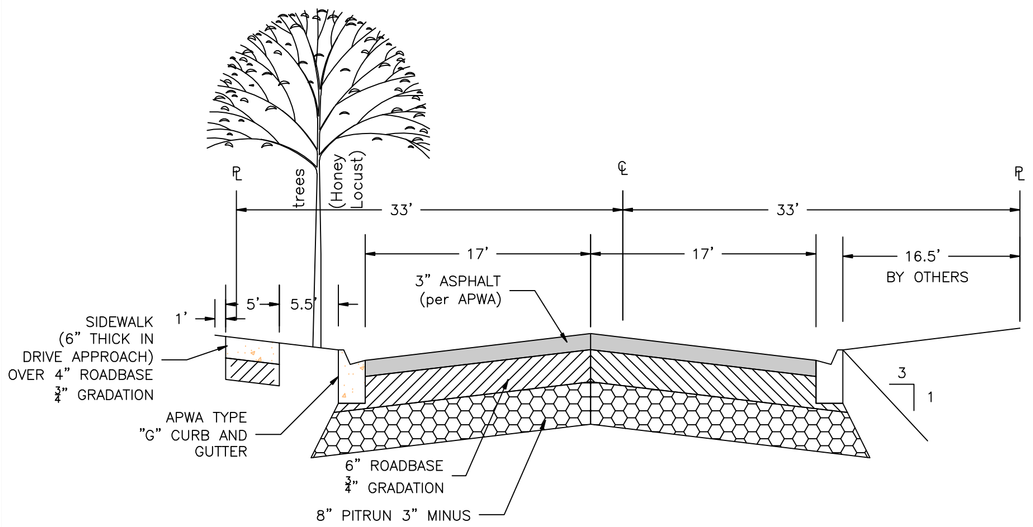

3900 WEST CROSS-SECTION

2" CALIPER TREE REQUIRED (EVERY 50') AS SHOWN

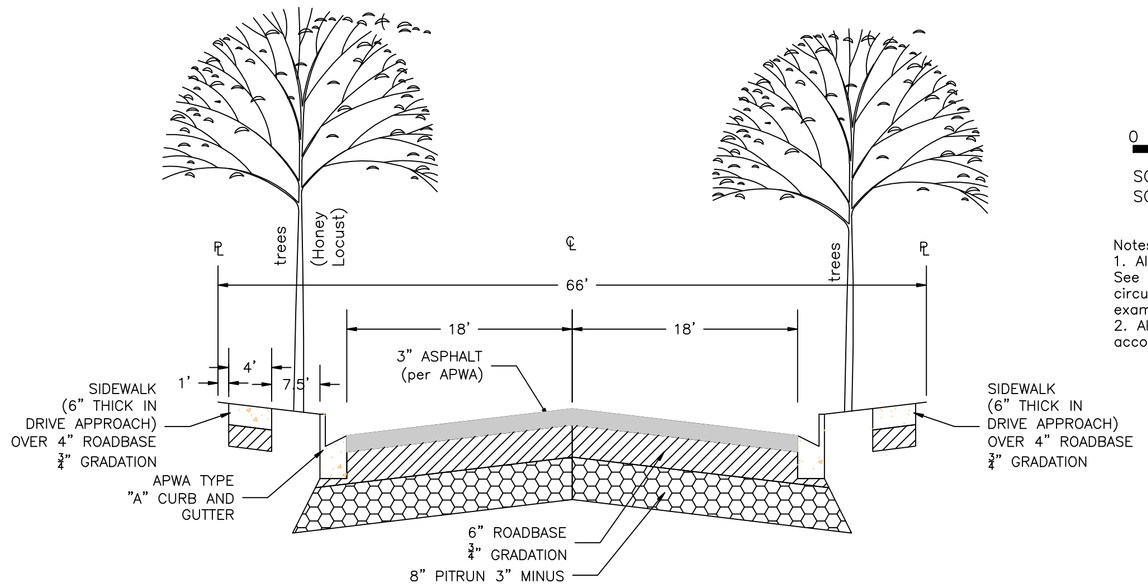

2025 SOUTH CROSS-SECTION

2" CALIPER TREE REQUIRED ON BOTH SIDES OF THE ROAD (EVERY 50') AS SHOWN

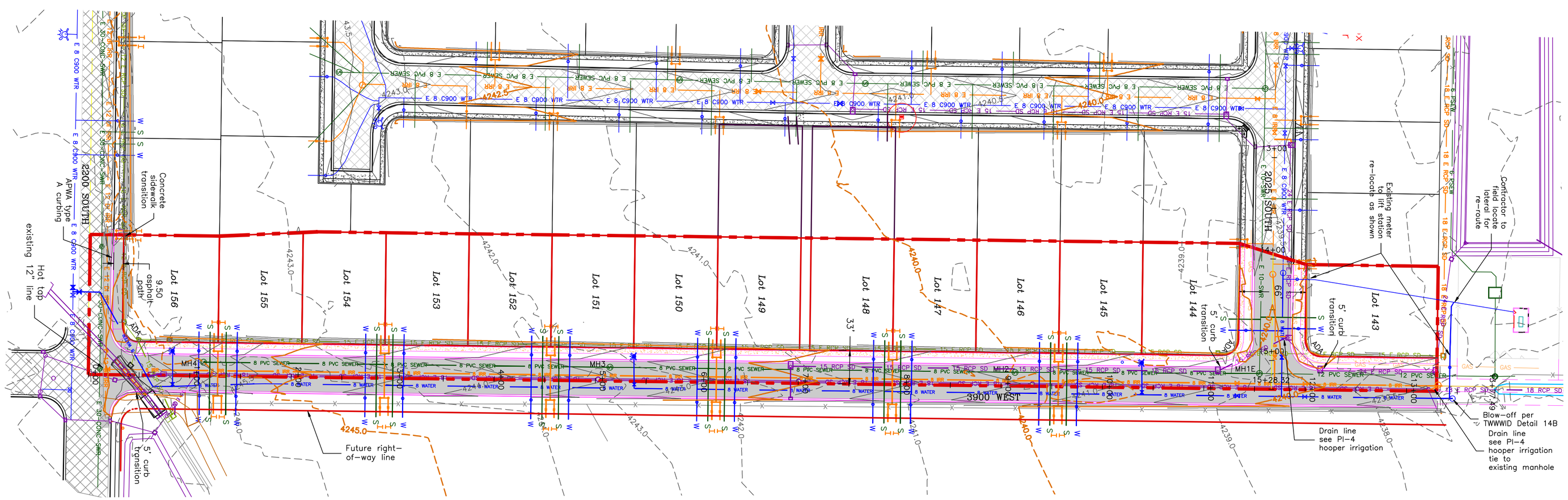

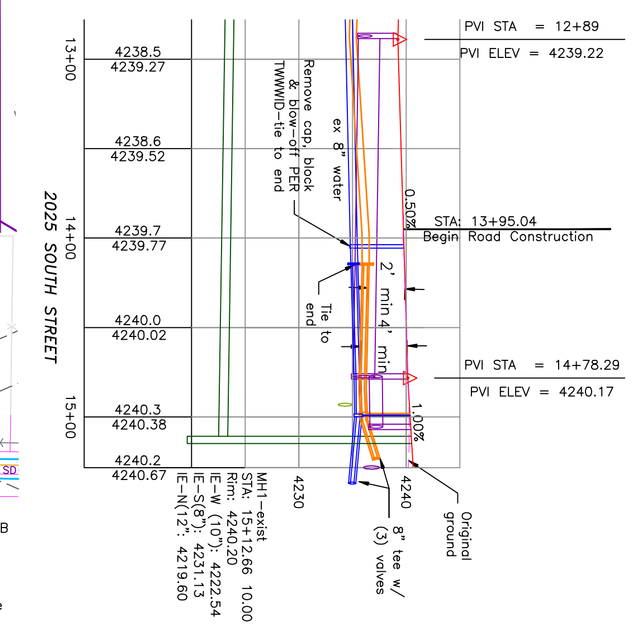

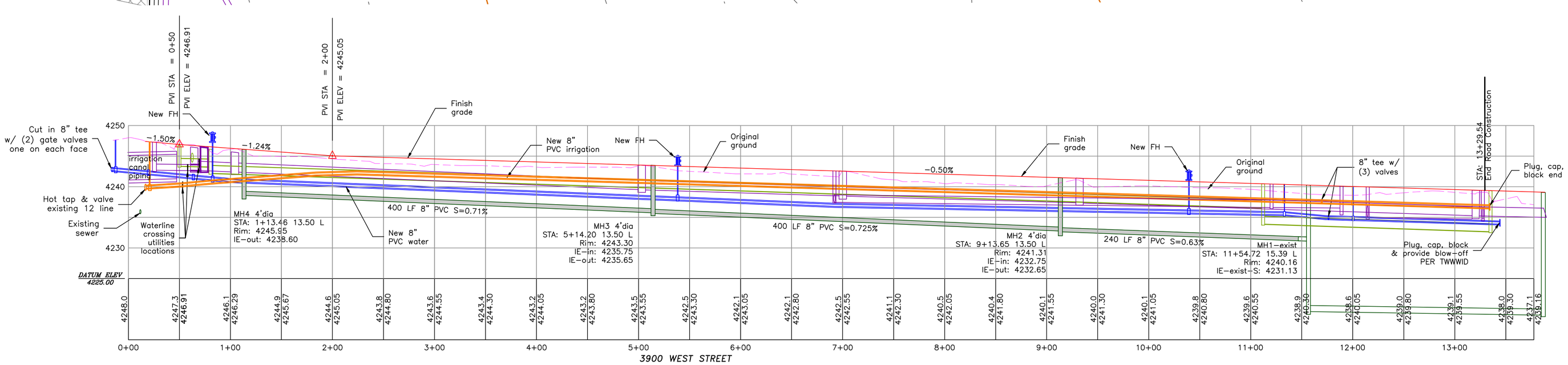

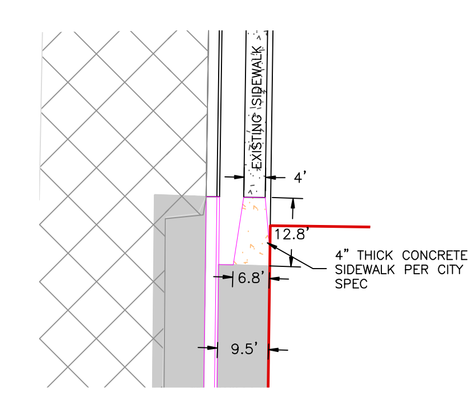

2200 SOUTH SIDEWALK TRANSITION DETAIL

SCALE: 1"= 20' (24x36 PLAN SET)

REGISTERED PROFESSIONAL ENGINEER
NO 366590
ADAM V. MACKELPRANG
4-21-2025
STATE OF UTAH
SEAL

ALLIANCE CONSULTING ENGINEERS
150 EAST 200 NORTH SUITE P
LOGAN, UTAH 84321
(435)755-5121
alliancelogan@yahoo.com

CONFIDENTIALITY AND COPYRIGHT NOTICE
UNAUTHORIZED USE, DISCLOSURE, OR COPYING OF THIS DRAWING IS PROHIBITED.
CONSTRUCTION DOCUMENTS THAT ARE DISTRIBUTED FOR BIDDING PURPOSES SHALL NOT BE RETURNED AND SHALL BE DESTROYED WITHIN 30 DAYS AFTER THE BID OPENING BY THE PLAN HOLDER.
COPYRIGHT 2005

No.	REVISIONS / SUBMISSIONS	DATE

DRAWN :
REVIEWED :
PROJECT NO. :
CAD FILE :

PROJECT TITLE: TAYLOR LANDING PHASE 1B
A CLUSTER SUBDIVISION

DRAWING TITLE: ROAD CONSTRUCTION PLAN

DATE : MARCH,2025

DRAWING No. 2

TAYLOR LANDING PHASE 1B

A CLUSTER SUBDIVISION

PART OF THE NORTH HALF OF SECTION 28, TOWNSHIP 6 NORTH, RANGE 2 WEST, SALT LAKE BASELINE AND MERIDIAN
WEBER COUNTY, TAYLOR, UTAH

IRRIGATION RE-ROUTE

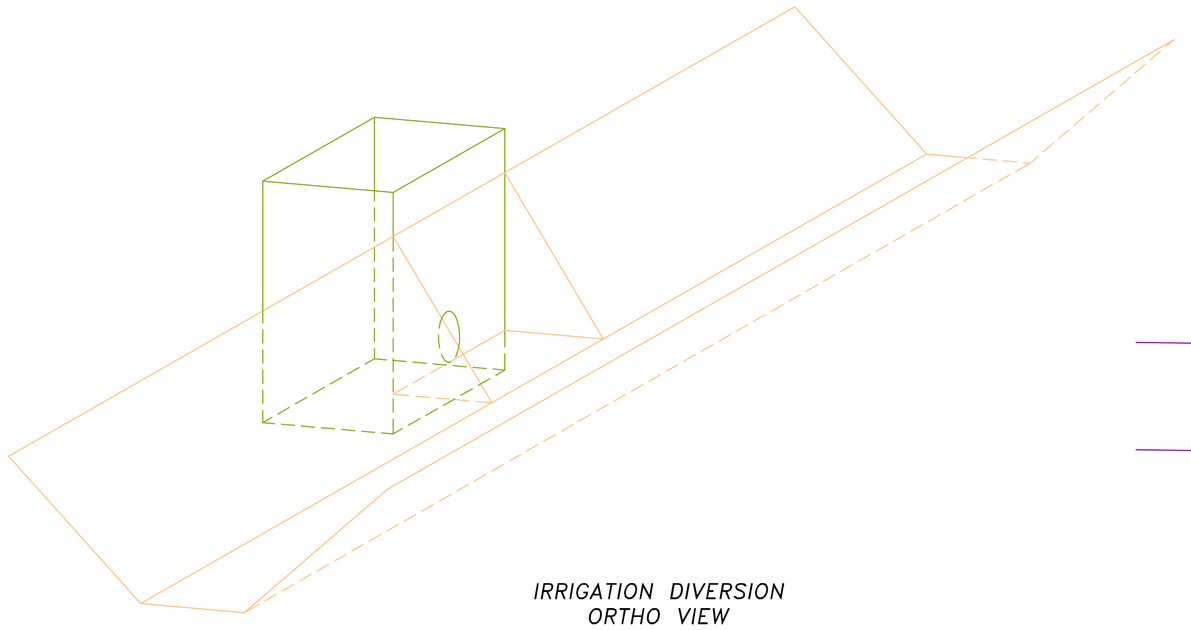

IRRIGATION DIVERSION ORTHO VIEW

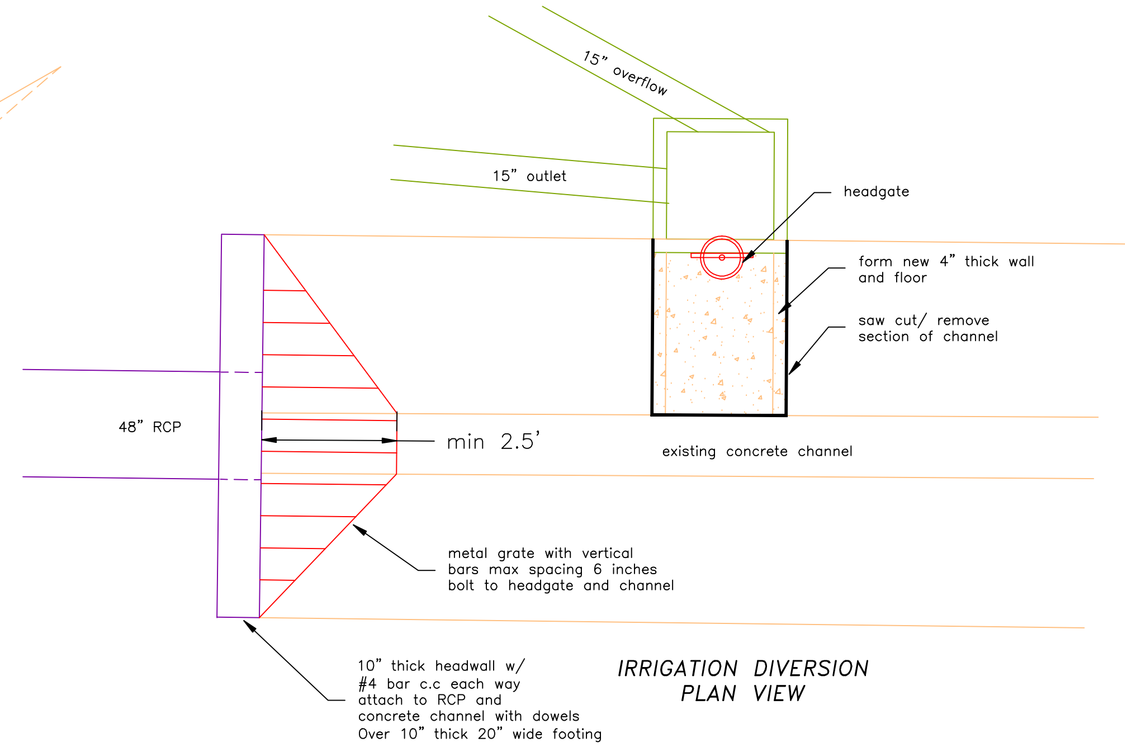

IRRIGATION DIVERSION PLAN VIEW

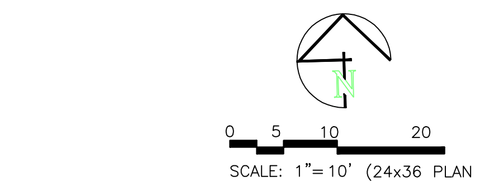

BOUNDARY LINE
LOT LINE
12 E RCP SD — EXISTING IRRIGATION SYSTEM
15 RCP SD — PROPOSED IRRIGATION RE-ROUTE AS NOTED

Notes:
All ADA ramps to include truncated domes grey in color. See APWA plan 235.1 example B unless there are special circumstances.
All work on the secondary water system is to be done in accordance with Hooper Irrigation Company Standards

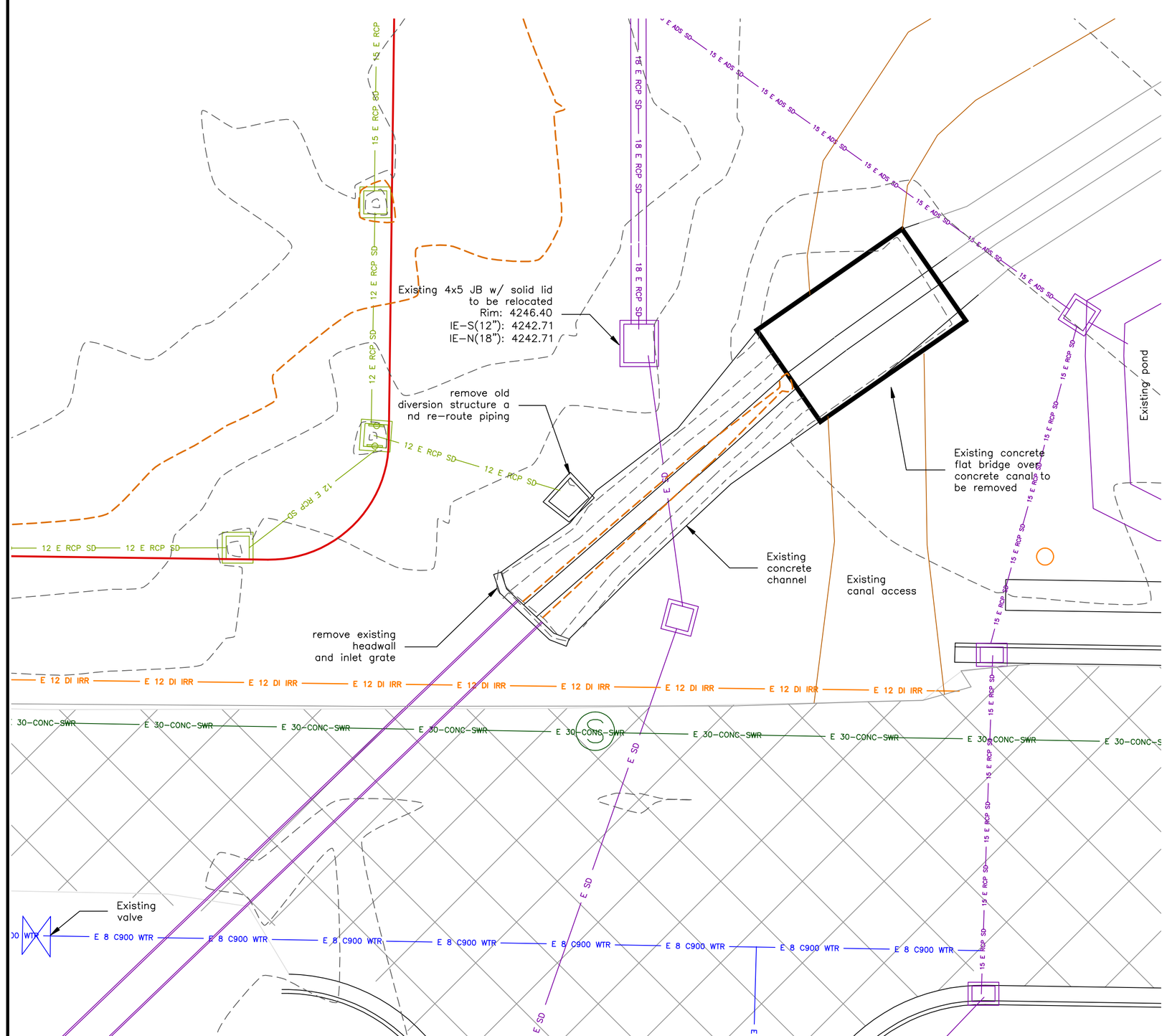

EXISTING SITE

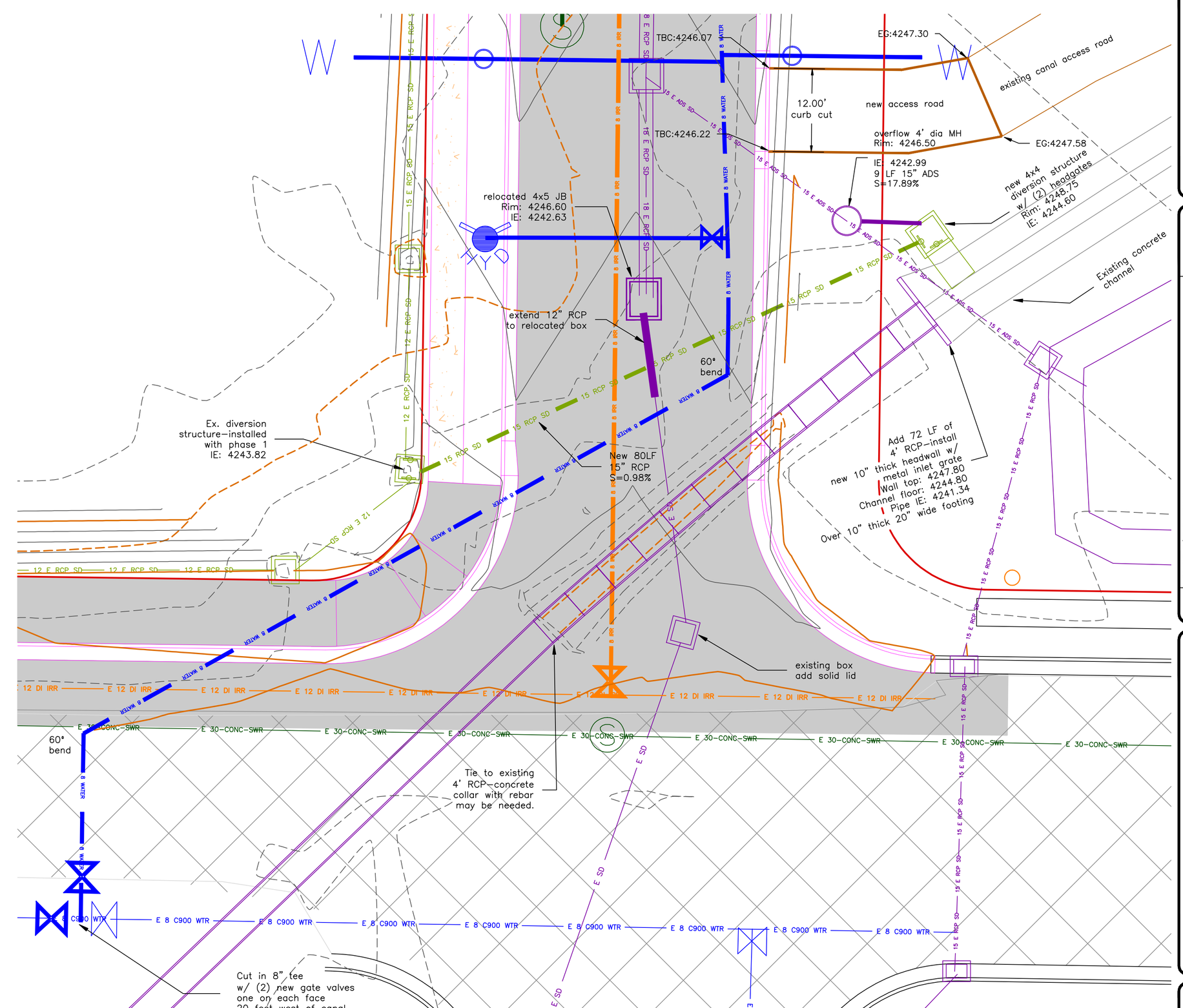

PROPOSED SITE

REGISTERED PROFESSIONAL ENGINEER
NO. 368590
ADAM V. MACKELPRANG
4-21-2025
STATE OF UTAH
SEAL

ALLIANCE CONSULTING ENGINEERS
150 EAST 200 NORTH SUITE P
LOGAN, UTAH 84321
(435)755-5121
alliancelogan@yahoo.com

CONFIDENTIALITY AND COPYRIGHT NOTICE
UNAUTHORIZED USE, DISCLOSURE, OR COPYING OF THIS DRAWING IS PROHIBITED.
CONSTRUCTION DOCUMENTS THAT ARE DISTRIBUTED FOR BIDDING PURPOSES SHALL NOT BE RETURNED AND SHALL BE DESTROYED WITHIN 30 DAYS AFTER THE BID OPENING BY THE PLAN HOLDER.
COPYRIGHT 2005

No.	REVISIONS / SUBMISSIONS	DATE

DRAWN :
PROJECT NO. :
REVIEWED :
CAD FILE :

PROJECT TITLE: TAYLOR LANDING PHASE 1B
A CLUSTER SUBDIVISION

DRAWING TITLE: IRRIGATION RE-ROUTE

DATE : MARCH,2025

DRAWING No.

TAYLOR LANDING PHASE 1B

A CLUSTER SUBDIVISION

PART OF THE NORTH HALF OF SECTION 28, TOWNSHIP 6 NORTH, RANGE 2 WEST, SALT LAKE BASELINE AND MERIDIAN
WEBER COUNTY, TAYLOR, UTAH

GRADING/ DRAINAGE PLAN

0 30 60 120

SCALE: 1"=60' (24x36 PLAN SET)

BOUNDARY LINE
LOT LINE
CENTERLINE
UTILITY EASEMENT LINE
EXISTING FENCE
E 8 C900 WTR — EXISTING WATER AS NOTED
8 C-900 WTR — PROPOSED 8" PVC C-900 DR 18 WATER
W — PROPOSED 1" CTS 200 PSI POLY WATER SERVICE
E 30-CONC-SWR — EXISTING SEWER AS NOTED
8 PVC SEWER — PROPOSED 8" SDR 35 SEWER AS NOTED
S — PROPOSED 4" SEWER LATERAL
E 12 DI IRR — EXISTING 12" DI IRRIGATION
8 IRR — PROPOSED 8" PVC C-900 DR18 IRRIGATION MAIN, PURPLE PIPE WITH LOCATOR TAPE AND 14GA LOCATOR WIRE
12 IRR — PROPOSED 12" PVC C-909 DR18 IRRIGATION MAIN, PURPLE PIPE WITH LOCATOR TAPE AND 14GA LOCATOR WIRE
I — PROPOSED IRRIGATION SERVICE PER HOOPER IRRIGATION COMPANY (see PI-10 hooper irrigation, double service unless otherwise noted)
15 E ADS SD — EXISTING STORM SYSTEM
15 RCP SD — PROPOSED STORM SYSTEM AS NOTED
EXISTING MAJOR CONTOUR (5')
EXISTING MINOR CONTOUR (1')
PROPOSED MAJOR CONTOUR (2.5')
PROPOSED MINOR CONTOUR (0.5')
EXISTING ASPHALT
PROPOSED ASPHALT
PROPOSED CONCRETE

Notes:
All ADA ramps to include truncated domes grey in color. See APWA plan 235.1 example B unless there are special circumstances.
All work on the secondary water system is to be done in accordance with Hooper Irrigation Company Standards

Drainage Area to Pond:				13.70	acres					
Weighted 'C' value for Pond Drainage Area:				0.45						
Allowable Infiltration Rate:		Hyd D		0.6	inches/hr =	0.0008	ft/min	100	min/inch	
Pond Bottom Area:			76	ft x	350	ft =	26600	sq. ft.		
Allowable Discharge Rate:				0.2	cfs/acre					

100-Year Return Period

Interval (min)	Precip.* Intensity (in/hr)	Precip. Depth (in)	Area (ac)	C Value	CxAx3630 (ft^3/in)	Accum. Inflow (ft3/min)	Allowable Discharge (ft^3/min)	Accum. Discharge (ft^3)	Required Storage (ft^3)	(ac-ft)
5	6.52	0.54	13.7	0.45	22378.95	12151.77	187	933	11219	0.26
10	4.96	0.83	13.7	0.45	22378.95	18485.013	187	1866	16619	0.38
15	4.08	1.02	13.7	0.45	22378.95	22826.529	187	2798.5	20028	0.46
30	2.76	1.38	13.7	0.45	22378.95	30882.951	187	5597	25286	0.58
60	1.71	1.71	13.7	0.45	22378.95	38268.005	187	11194	27074	0.62
120	0.93	1.86	13.7	0.45	22378.95	41624.847	187	22388	19237	0.44
180	0.63	1.90	13.7	0.45	22378.95	42517.767	187	33582	8936	0.21
360	0.35	2.12	13.7	0.45	22378.95	47442.926	187	67164	0	0.00
720	0.22	2.60	13.7	0.45	22378.95	58183.48	187	134328	0	0.00
1440	0.12	2.88	13.7	0.45	22378.95	64451.376	187	268656	0	0.00

original retention volume: 42,223 cf

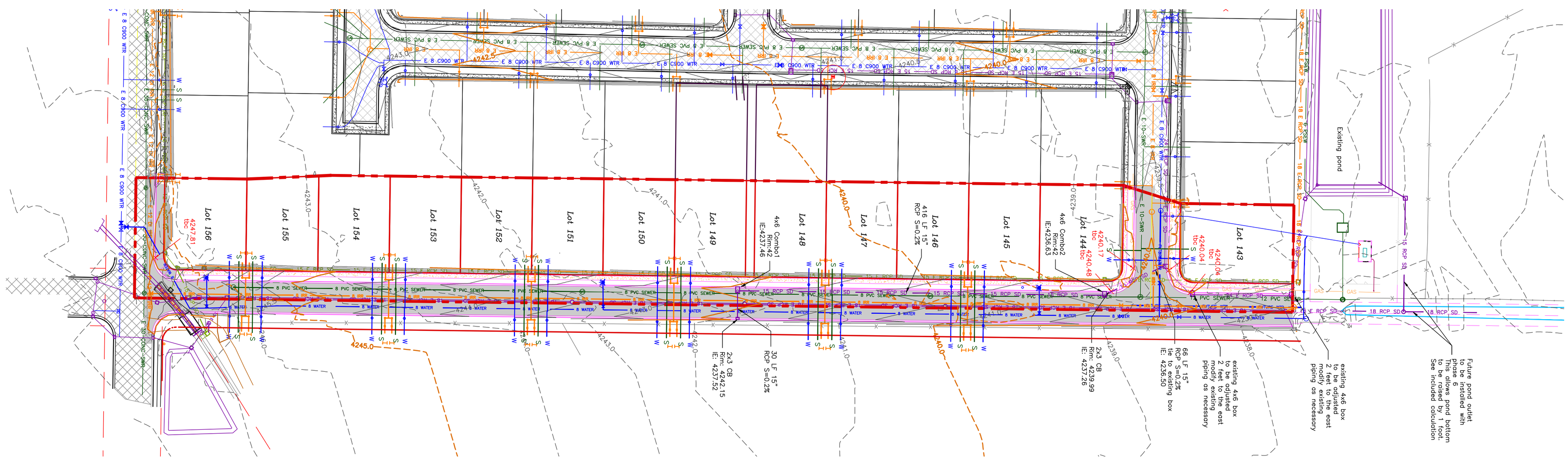

REGISTERED PROFESSIONAL ENGINEER
NO. 368590
ADAM V. MACKELPRANG
4-21-2025
STATE OF UTAH
SEAL

ALLIANCE CONSULTING ENGINEERS
150 EAST 200 NORTH SUITE P
LOGAN, UTAH 84321
(435)755-5121
alliancelogan@yahoo.com

CONFIDENTIALITY AND COPYRIGHT NOTICE
UNAUTHORIZED USE, DISCLOSURE, OR COPYING OF THIS DRAWING IS PROHIBITED.
CONSTRUCTION DOCUMENTS THAT ARE DISTRIBUTED FOR BIDDING PURPOSES SHALL NOT BE RETURNED AND SHALL BE DESTROYED WITHIN 30 DAYS AFTER THE BID OPENING BY THE PLAN HOLDER.
COPYRIGHT 2005

No.	REVISIONS/ SUBMISSIONS	DATE

DRAWN :
REVIEWED :
PROJECT NO. :
CAD FILE :

PROJECT TITLE: TAYLOR LANDING PHASE 1B
A CLUSTER SUBDIVISION

DRAWING TITLE: GRADING/ DRAINAGE PLAN

DATE : MARCH,2025

DRAWING No. 4

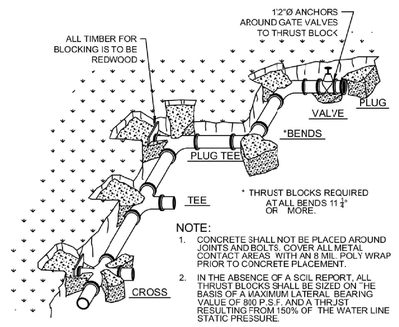

NOTE:
1. CONCRETE SHALL NOT BE PLACED AROUND JOINTS AND BOLTS. COVER ALL METAL CONTACT AREAS WITH AN 8 MIL POLY WRAP PRIOR TO CONCRETE PLACEMENT.
2. IN THE ABSENCE OF A SOIL REPORT, ALL THRUST BLOCKS SHALL BE SIZED ON "HE 150 PSI" SOIL BEARING CAPACITY WITH TESTING VALUE OF 350 P.S.I. AND 0.75 THRUST RESULTING FROM 150% OF THE WATER LINE STATIC PRESSURE.

TABLE OF BEARING AREAS IN SQ. FT FOR CONCRETE THRUST BLOCKING

SIZE	BENDS 90°	BENDS 45°	BENDS 22.5°	BENDS 11.5°	TEE*	GATE VALVES	DEAD END(DE)	DE&VERT BEND(*)	DE&VERT BEND (**)
2	1.0	0.5	0.3	0	0.7	0.5	0.7	0.7	0.7
4	1.8	1.0	0.5	0	1.3	0.5	1.3	1.3	1.3
6	4.0	2.2	1.1	0	2.8	0.7	2.8	2.8	2.8
8	7.1	3.8	2.0	1.0	5.0	2.4	5.0	5.0	5.0
12	11.1	6.0	3.0	1.5	7.8	4.5	7.8	7.8	7.8
12	16.0	8.6	4.4	2.2	11.3	7.3	11.3	11.3	11.3
14	21.7	11.8	6.0	3.0	15.4	11.0	15.4	15.4	15.4
13	25.0	13.5	7.0	3.5	17.6		17.6	17.6	17.6
15	28.4	15.3	8.0	4.0	20.0		20.0	20.0	20.0
13	36.0	19.4	10.0	5.0	25.4		25.4	25.4	25.4
20	44.2	24.0	12.2	6.1	31.4		31.4	31.4	31.4
21	49.0	26.5	13.5	6.8	34.6		34.6	34.6	34.6
22	54.0	29.0	14.8	7.4	38.0		38.0	38.0	38.0
24	64.0	34.5	17.7	8.9	45.0		45.0	45.0	45.0
32	100.0	54.0	27.6	13.8	71.0		71.0	71.0	71.0
36	144.0	78.0	40.0	20.0	102.0		102.0	102.0	102.0

FOR 150 P.S.I. INTERNAL STATIC PRESSURE AND 1000 LBS/PER SQ. FT. SOIL BEARING CAPACITY.

*ALL VALVES, TEES, CROSSES AND BENDS SHALL ALSO BE FITTED WITH MECHANICAL RESTRAINTS, SUCH AS MEGA LUG OR RONN GRIP WITH FLUOROPOLYMER COATED BOLTS AND NUTS.

AREAS GIVEN IN TABLE ARE BASED UPON AN INTERNAL STATIC PRESSURE OF 100 P.S.I AND A SOIL BEARING CAPACITY OF 1000 LBS PER SQ. FT. BEARING AREAS FOR ANY PRESSURE AND SOIL BEARING CAPACITY MA* BE OBTAINED BY MULTIP.YING THE TABULATED VALUES BY A CORRECTION FACTOR "F":

F= ACTUAL SPECIFIED TEST PRESSURE IN HUNDREDS OF LBS/SQ. IN / ACTUAL SOIL BEARING CAPACITY IN THOUSANDS OF LBS.

EXAMPLE: TO FIND BEARING AREA FOR 6"-90° BEND WITH A STATIC INTERNAL PRESSURE OF 150 P.S.I AND WITH A SOIL BEARING CAPACITY OF 3000 LBS. PER SQ. FT.

F=1.5 / 3=0.5 TABULATED VALUE = 7.1 SQ. FT.
0.5 X 7.1=3.56 = 4 SQ. FT. (~OR 2FT. LONG BY 2FT. HIGH.)

1 THRUST BLOCK DETAIL
APPLIES TO ALL PRESSURE PIPE

NTS

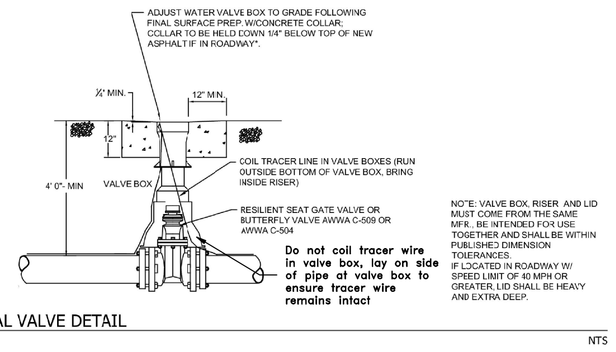

2 TYPICAL VALVE DETAIL

NTS

DRAFTED: MDD | DEVIATIONS FROM STANDARDS MUST BE APPROVED BY TAYLOR WEST WEBER WATER IMPROVEMENT DISTRICT.
DESIGNED: DW
CHECKED: VS
DATE: 1/10/18
REV 1:
REV 2:

STANDARD WATER DETAILS
TAYLOR WEST WEBER
WATER IMPROVEMENT DISTRICT
THRUST BLOCK DETAIL
TYPICAL VALVE DETAIL
SHEET 1

GARDNER ENGINEERING
CIVIL • LAND PLANNING
MUNICIPAL • LAND SURVEYING
5150 SOUTH 1900 WEST, WEST HAVEN, UT 84401
OFFICE: 801.476.0202 F: 801.476.0555

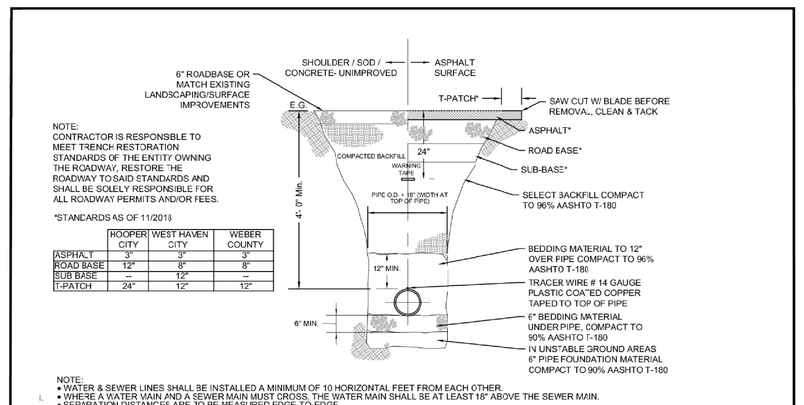

NOTE:
CONTRACTOR IS RESPONSIBLE TO MEET TRENCH RESTORATION STANDARDS OF THE ENTITY OWNING THE ROADWAY, RESTORE THE ROADWAY TO SAID STANDARDS AND SHALL BE SOLELY RESPONSIBLE FOR ALL ROADWAY PERMITS AND/OR FEES.

*STANDARDS AS OF 11/2013

	ROOPER/ WEST HAVEN CITY	WEST HAVEN CITY	WEBER COUNTY
ASPHALT	3"	3"	3"
ROAD BASE	12"	8"	8"
SUB BASE	–	12"	–
T-PATCH	24"	12"	12"

NOTE:
1. WATER & SEWER LINES SHALL BE INSTALLED A MINIMUM OF 10 HORIZONTAL FEET FROM EACH OTHER.
2. WHERE A WATER MAIN AND A SEWER MAIN MUST CROSS, THE WATER MAIN SHALL BE AT LEAST 18" ABOVE THE SEWER MAIN.
3. SEPARATION DISTANCES ARE TO BE MEASURED EDGE-TO-EDGE.
4. WATER MAINS SHALL NOT BE INSTALLED IN THE SAME TRENCH WITH EITHER SEWER OR SECONDARY PIPES.
5. IF THESE S'ANDARDS CANNOT BE MET AN EXCEP'ION TO THE STANDARD MAY BE POSSIBLE. THE ENTITY SEEKING THE EXCEP'ION SHALL INITIATE AND PURSUE A REQUEST FOR A SEPARATION EXCEPTION WITH THE STATE DIVISION OF DRINKING WATER, IN ACCORDANCE WITH R309-550-7 OF THE STATE OF UTAH ADMINISTRATIVE RULES.

3A TYPICAL TRENCH SECTION

NTS

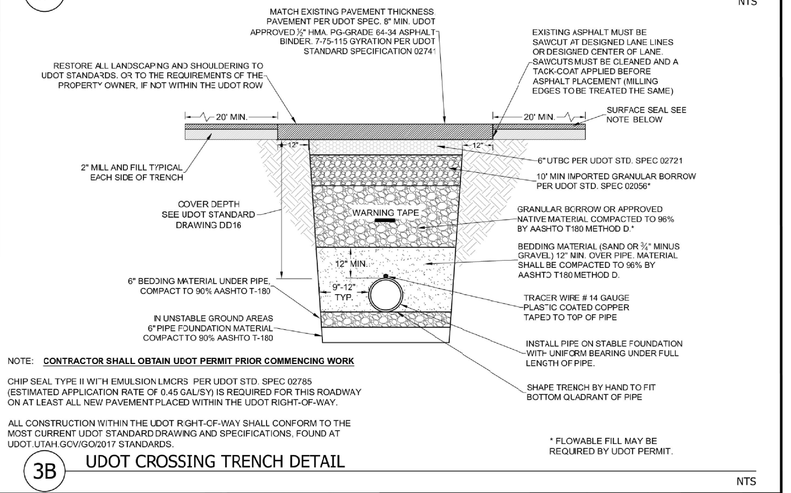

NOTE: CONTRACTOR SHALL OBTAIN UDOT PERMIT PRIOR COMMENCING WORK

CHIP SEAL TYPE II W'T'H EMULSION LMORS PER UDOT STD. SPEC 02785
(ESTIMATED APPLICATION RATE OF 0.45 GALLON (S)/ (S REQUIRED FOR THIS ROADWAY ON AT LEAST ALL NEW PAVEMENT PLACED WITHIN THE UDOT RIGHT-OF-WAY.

ALL CONSTRUCTION IN'THIN THE UDOT RGHT-OF-WAY SHALL CONFORM TO THE MOST CURRENT UDOT STANDARD DRAWING AND SPECIFICATIONS, FOUND AT UDOT.UTAH.GOV/GO/DOT STANDARDS.

* FLOWABLE FILL MAY BE REQUIRED BY UDOT PERMIT.

3B UDOT CROSSING TRENCH DETAIL

NTS

DRAFTED: MDD | DEVIATIONS FROM STANDARDS MUST BE APPROVED BY TAYLOR WEST WEBER WATER IMPROVEMENT DISTRICT.
DESIGNED: DW
CHECKED: VS
DATE: 1/10/18
REV 1:
REV 2:

STANDARD WATER DETAILS
TAYLOR WEST WEBER
WATER IMPROVEMENT DISTRICT
TYPICAL TRENCH SECTION
UDOT CROSSING TRENCH DETAIL
SHEET 2

GARDNER ENGINEERING
CIVIL • LAND PLANNING
MUNICIPAL • LAND SURVEYING
5150 SOUTH 1900 WEST, WEST HAVEN, UT 84401
OFFICE: 801.476.0202 F: 801.476.0555

NOTES:

ACCEPTABLE COPPER SETTERS: FORD VBHC 74-15W-44-44QNL
ALL COMPRESSION FITTINGS: SHALL HAVE STAINLESS STEEL INSERTS
ACCEPTABLE CORPORATION STOPS: FORD F91100-4-Q-NL

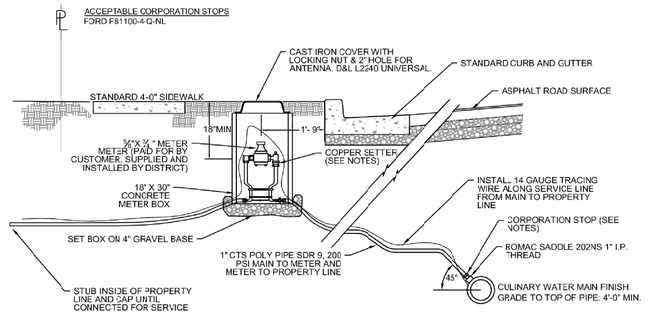

4 TYPICAL WATER CONNECTION\RE-CONNECTION

NTS

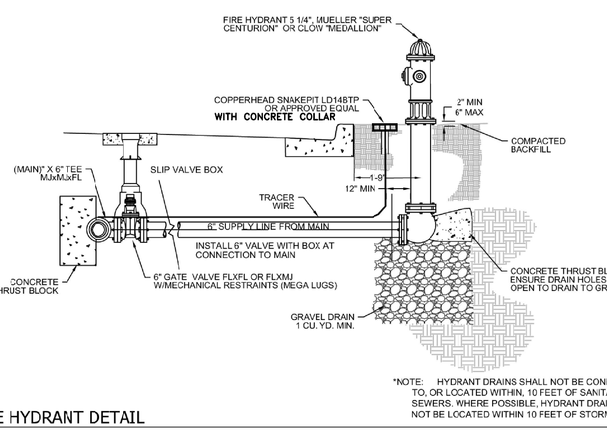

*NOTE: HYDRANT DRAINS SHALL NOT BE CONNECTED TO, OR LOCATED WITHIN, 10 FEET OF SANITARY SEWERS. WHERE POSSIBLE, HYDRANT DRAINS SHALL NOT BE LOCATED WITHIN 10 FEET OF STORM DRAINS.

5 FIRE HYDRANT DETAIL

NTS

DRAFTED: MDD | DEVIATIONS FROM STANDARDS MUST BE APPROVED BY TAYLOR WEST WEBER WATER IMPROVEMENT DISTRICT.
DESIGNED: DW
CHECKED: VS
DATE: 1/10/18
REV 1: (3/17) 19 UNIVERSAL METER BOX LID
REV 2:

STANDARD WATER DETAILS
TAYLOR WEST WEBER
WATER IMPROVEMENT DISTRICT
TYPICAL WATER CONNECTION DETAIL
FIRE HYDRANT DETAIL
SHEET 3

GARDNER ENGINEERING
CIVIL • LAND PLANNING
MUNICIPAL • LAND SURVEYING
5150 SOUTH 1900 WEST, WEST HAVEN, UT 84401
OFFICE: 801.476.0202 F: 801.476.0555

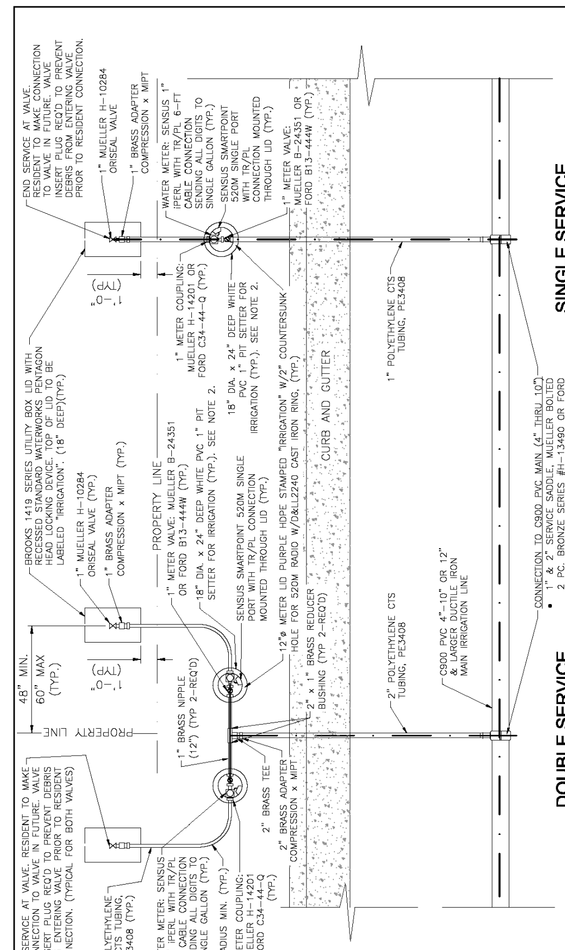

TYPICAL SERVICE CONNECTIONS
N.T.S.

REUSE OF DRAWINGS
THIS DOCUMENT, AND THE IDEAS AND DESIGNS INCORPORATED HEREIN, AS INDICATED BY THE SEAL OF A REGISTERED PROFESSIONAL ENGINEER, IS A PROFESSIONAL SERVICE OF JUB ENGINEERS, INC. AND IS NOT TO BE USED, IN WHOLE OR PART, FOR ANY OTHER PROJECT WITHOUT WRITTEN AUTHORIZATION BY JUB ENGINEERS, INC.

REVISION

NO.	DESCRIPTION	BY	APR.	DATE
1	REV. DRAWING TO ADD CURB & GUTTER & CALOUTS	DBB	V.J.	11/11/21
2	REV. DRAWING TO ADD TWO NEW 90 "DOWN" BENDS	DBB	V.J.	12/13/21
3	REV. DRAWING TO ADD CORK WITHIN 3FT OF ALL SERVICES	JRC	V.J.	1/3/22
4	REV. DRAWING TO ADD 2" BRASS TEE	JRC	V.J.	1/3/22

JUB Engineers • Surveyors • Planners

Hooper Irrigation Company
Pressure Irrigation Standards
TYPICAL SERVICE CONNECTION DETAIL

SHEET PI-10
CAD DWG: 24160-01-PI-Std
PLOT SCALE: N/A
DATE: MAY 2020
DRAWN BY: S. VAN LE
CHECKED BY: S. VAN LE
APPROVED BY: VLA
SCALE: N/A

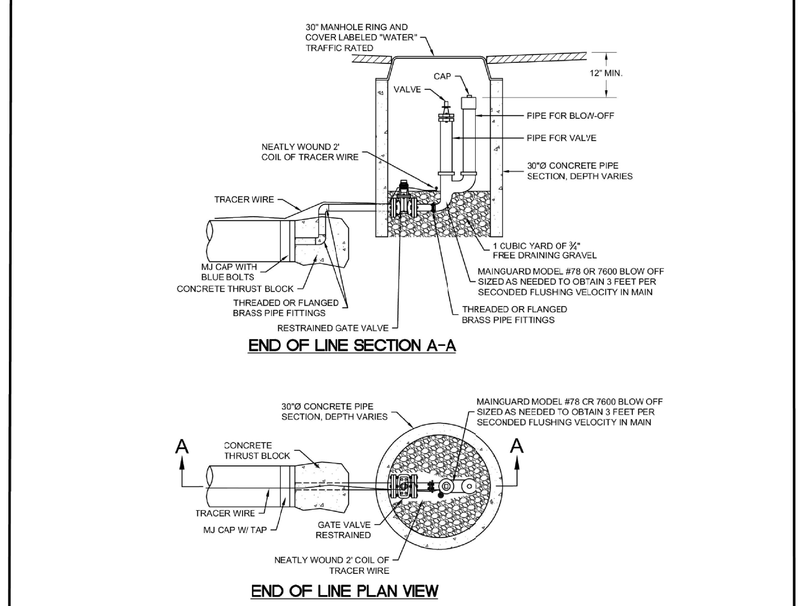

14B BLOW OFF DETAIL

NTS

DRAFTED: MDD | DEVIATIONS FROM STANDARDS MUST BE APPROVED BY TAYLOR WEST WEBER WATER IMPROVEMENT DISTRICT.
DESIGNED: DW
CHECKED: VS
DATE: 1/10/18
REV 1:
REV 2:

STANDARD WATER DETAILS
TAYLOR WEST WEBER
WATER IMPROVEMENT DISTRICT
BLOW OFF DETAIL
SHEET 11B

GARDNER ENGINEERING
CIVIL • LAND PLANNING
MUNICIPAL • LAND SURVEYING
5150 SOUTH 1900 WEST, WEST HAVEN, UT 84401
OFFICE: 801.476.0202 F: 801.476.0555

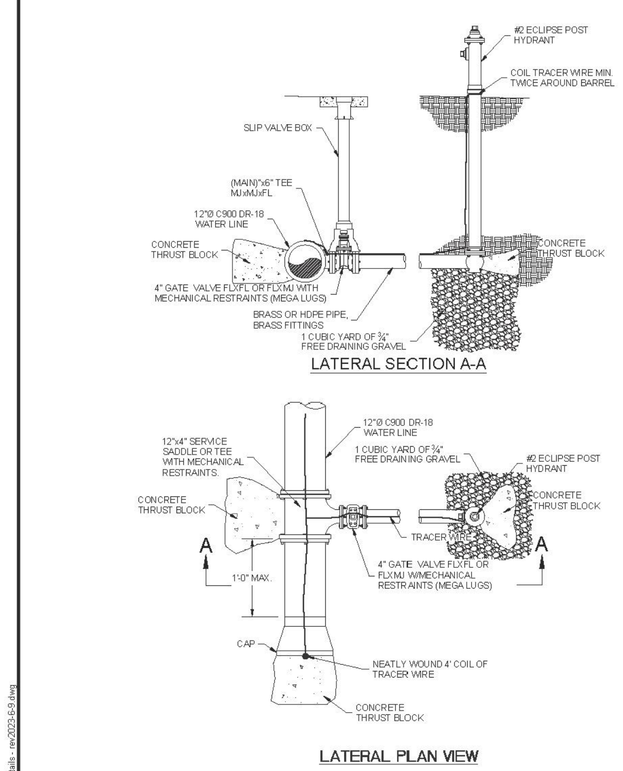

14A BLOW OFF DETAIL

NTS

DRAFTED: MDD | DEVIATIONS FROM STANDARDS MUST BE APPROVED BY TAYLOR WEST WEBER WATER IMPROVEMENT DISTRICT.
DESIGNED: DW | DISTRICT UT WEDOW APPROVAL 5/20/20
CHECKED: RB
DATE: 1/10/18
REV 1:
REV 2:
REV 3:
REV 4:

TAYLOR WEST WEBER

STANDARD WATER DETAILS
TAYLOR WEST WEBER
WATER IMPROVEMENT DISTRICT
BLOW OFF DETAIL
SHEET 11A

GARDNER ENGINEERING
CIVIL • LAND PLANNING
MUNICIPAL • LAND SURVEYING
5150 SOUTH 1900 WEST, WEST HAVEN, UT 84401
OFFICE: 801.476.0202 F: 801.476.0555

NOTES:

ACCEPTABLE COPPER SETTERS: FORD VBHC 74-15W-44-44QNL
ALL COMPRESSION FITTINGS: SHALL HAVE STAINLESS STEEL INSERTS
ACCEPTABLE CORPORATION STOPS: FORD F91100-4-Q-NL

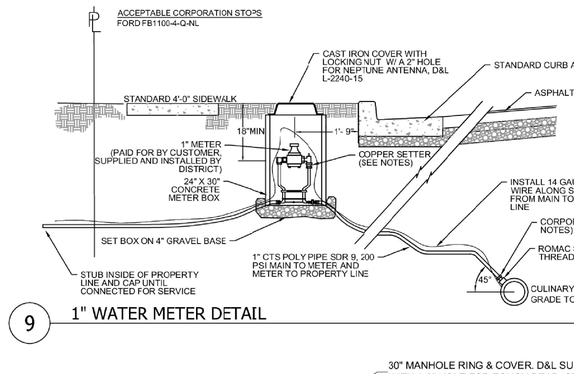

9 1" WATER METER DETAIL

NTS

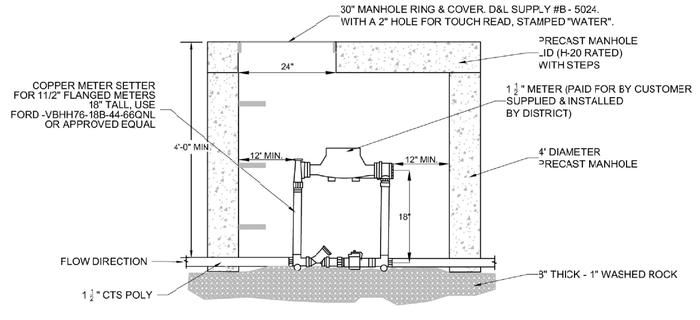

NOTES:
1. SERVICE LINE COVER UNDER CURB AND GUTTER MUST 3E ADJUSTED BETWEEN THE LIMITS OF 36" AND 48". CO'ER O:' SERVICE LINE IN THE STREET MUST NOT BE GREATER THAN 48'
2. :DISTRICT MANAGER OR FOREMAN MUST APPROVE LOCATION OF METER BOX IF DISTANCE FROM TOP BACK CURB & CUTTER EXCEEDS 1'-0"
3. :METER SETTER, CONSISTS OF: 2 DUAL CHECK VALVES, 2 LOCKING KEY VALVES, FITTINGS & SPOOLS, COMPLETE
4. ALL PIPING, VAULT, & MISCELLANEOUS ITEMS SHALL BE FURNISHED & INSTALLED BY THE CONTRACTOR, COMPLETE. COST OF METER SHALL BE BORNE BY SERVICED CUSTOMER.
5. ANY CHANGES MUST BE APPROVED BY DISTRICT MANAGER OR INSPECTOR.
6. F SERVICE LINE IS NOT 1 ½" CTS POLY THEN INSTALLER WILL HAVE TO INSTALL TRANSITION FITTINGS.

10 1 1/2" WATER METER DETAIL

NTS

DRAFTED: MDD | DEVIATIONS FROM STANDARDS MUST BE APPROVED BY TAYLOR WEST WEBER WATER IMPROVEMENT DISTRICT.
DESIGNED: DW
CHECKED: VS
DATE: 1/10/18
REV 1:
REV 2:

STANDARD WATER DETAILS
TAYLOR WEST WEBER
WATER IMPROVEMENT DISTRICT
1" METER DETAIL
1½" METER DETAIL
SHEET 7

GARDNER ENGINEERING
CIVIL • LAND PLANNING
MUNICIPAL • LAND SURVEYING
5150 SOUTH 1900 WEST, WEST HAVEN, UT 84401
OFFICE: 801.476.0202 F: 801.476.0555

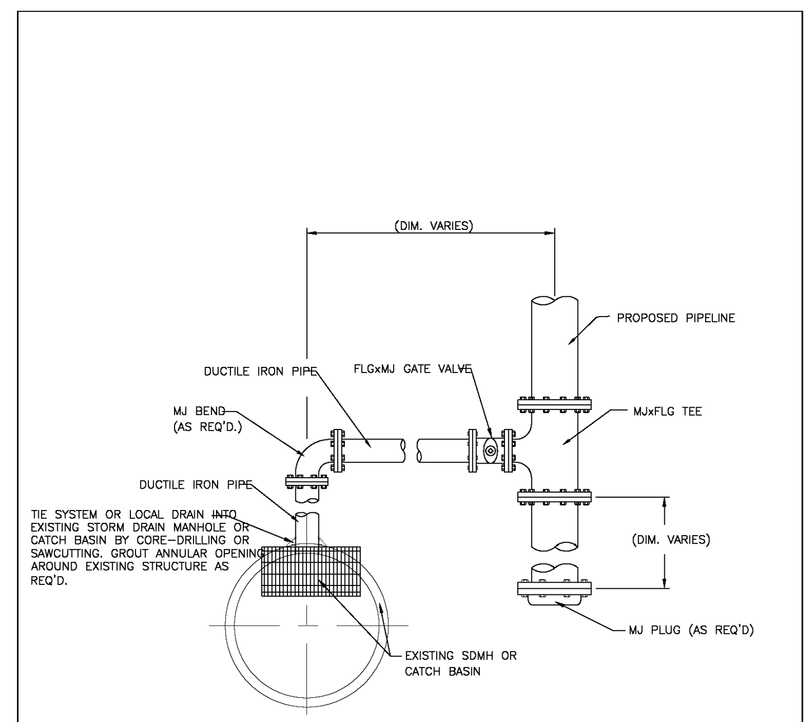

NOTE:
DRAIN SIZE TO BE APPROVED BY COMPANY ENGINEER.

LOCAL / SYSTEM DRAIN DETAIL
N.T.S.

REUSE OF DRAWINGS
THIS DOCUMENT, AND THE IDEAS AND DESIGNS INCORPORATED HEREIN, AS INDICATED BY THE SEAL OF A REGISTERED PROFESSIONAL ENGINEER, IS A PROFESSIONAL SERVICE OF JUB ENGINEERS, INC. AND IS NOT TO BE USED, IN WHOLE OR PART, FOR ANY OTHER PROJECT WITHOUT WRITTEN AUTHORIZATION BY JUB ENGINEERS, INC.

REVISION

NO.	DESCRIPTION	BY	APR.	DATE
1				
2				
3				
4				

JUB Engineers • Surveyors • Planners

Hooper Irrigation Company
Pressure Irrigation Standards
LOCAL/SYSTEM DRAIN DETAIL

SHEET PI-4
CAD DWG: 24160-01-PI-Std
PLOT SCALE: N/A
DATE: MAY 2020
DRAWN BY: S. VAN LE
CHECKED BY: S. VAN LE
APPROVED BY: VLA
SCALE: N/A

REGISTERED PROFESSIONAL ENGINEER
NO.368590
Adam MacKelprang
MACKELPRANG
4-21-2025
STATE OF UTAH
SEAL

ALLIANCE CONSULTING ENGINEERS
150 EAST 200 NORTH SUITE P
LOGAN, UTAH 84321
(435)755-5121
allianceloganl@yahoo.com

CONFIDENTIALITY AND COPYRIGHT NOTICE
UNAUTHORIZED USE, DISCLOSURE, OR COPYING OF THIS DRAWING IS PROHIBITED.
CONSTRUCTION DOCUMENTS THAT ARE DISTRIBUTED FOR BIDDING PURPOSES SHALL NOT BE RETURNED AND SHALL BE DESTROYED WITHIN 30 DAYS AFTER THE BID OPENING BY THE PLAN HOLDER.
COPYRIGHT 2005

No.	REVISIONS/ SUBMISSIONS	DATE

REVIEWED : | DRAWN :
CAD FILE : | PROJECT NO. :

PROJECT TITLE
TAYLOR LANDING PHASE 1B
A CLUSTER SUBDIVISION

DRAWING TITLE
DETAILS

DATE : MARCH,2025

DRAWING No.
3

4'x6' Combo

4'x6' Combo Box
Bases, Risers and Lids

Oldcastle Precast®

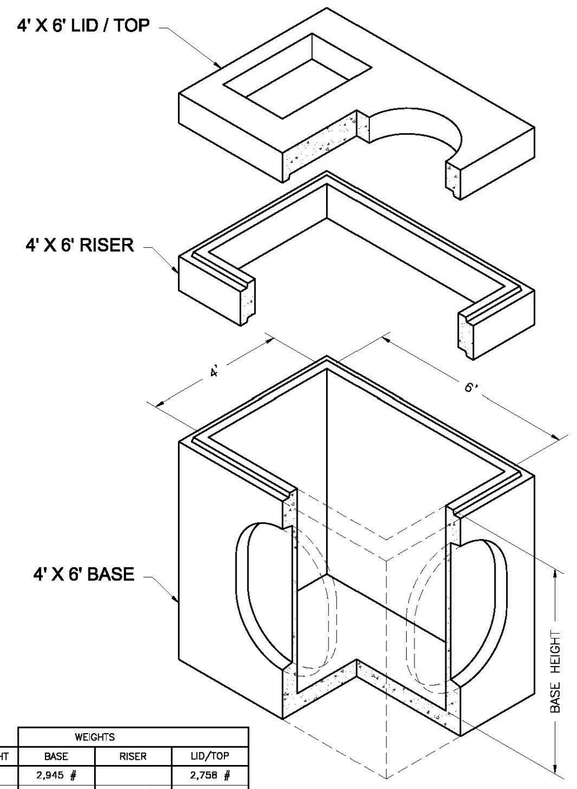

	WEIGHTS		
HEIGHT	BASE	RISER	LID/TOP
0'	2,945 #		2,758 #
1'		1,650 #	
2'		3,300 #	
3'		4,950 #	
3'-6"	6,704 #		6,704 #
4'	7,530 #		
5'	8,860 #		
6'	10,330 #		

NOTES:
1. Vault design complies with ASTM C-857 and C-858 with less than 2' of earth cover and an AASHTO HS-20 loading.
2. Lifting insert type and location may change without notice.

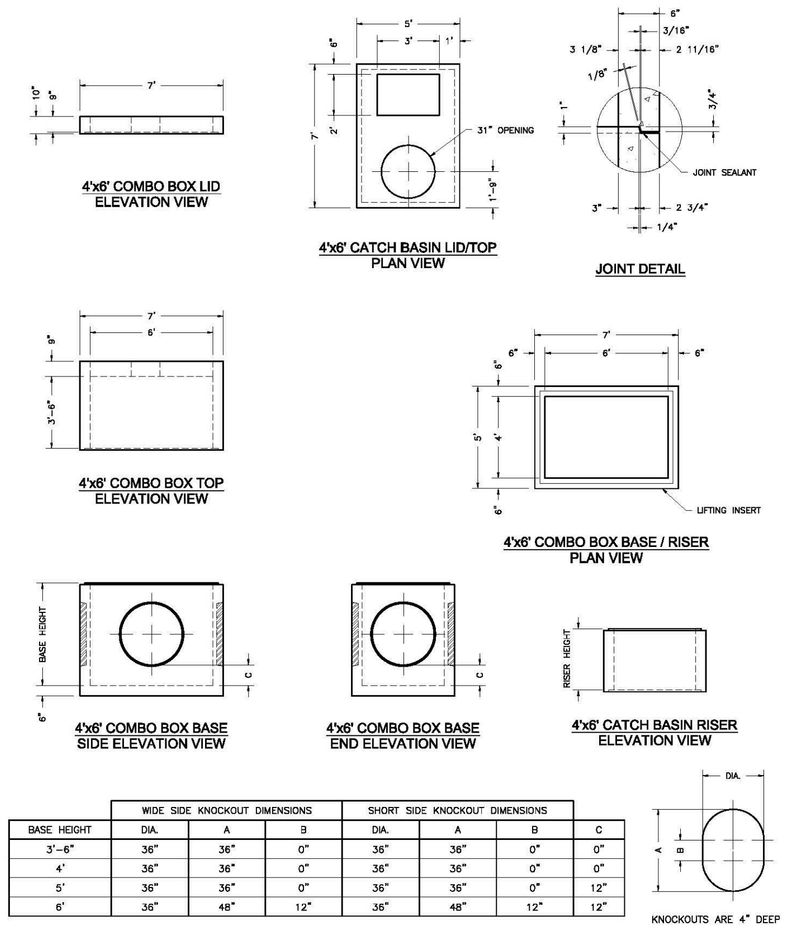

	WIDE SIDE KNOCKOUT DIMENSIONS			SHORT SIDE KNOCKOUT DIMENSIONS			
BASE HEIGHT	DIA.	A	B	DIA.	A	B	C
3'-6"	36"	36"	0"	36"	36"	0"	0"
4'	36"	36"	0"	36"	36"	0"	0"
5'	36"	36"	0"	36"	36"	0"	12"
6'	36"	48"	12"	36"	48"	12"	12"

Oldcastle Precast
801 West 12th Street
Ogden, Utah 84404

Phone: (801) 399-1171
Fax: (801) 392-7849

For more information about our products, please visit
oldcastleprecast.com

oldcastleprecast.com

© 2008 Oldcastle Precast, Inc.

2'x3' Basin

2'x3' Catch Basin
Bases and Risers

Oldcastle Precast®

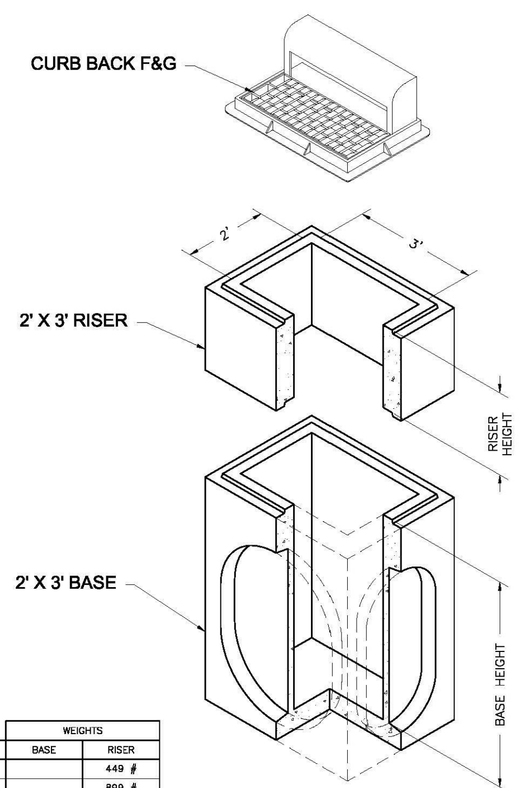

	WEIGHTS	
HEIGHT	BASE	RISER
6"		449 #
1'		899 #
2'		1,799 #
3'	2,977 #	2,700 #
4'	3,291 #	3,600 #
5'	3,918 #	

NOTES:
1. Vault design complies with ASTM C-857 and C-858 with less than 2' of earth cover and an AASHTO HS-20 loading.
2. Lifting insert type and location may change without notice.

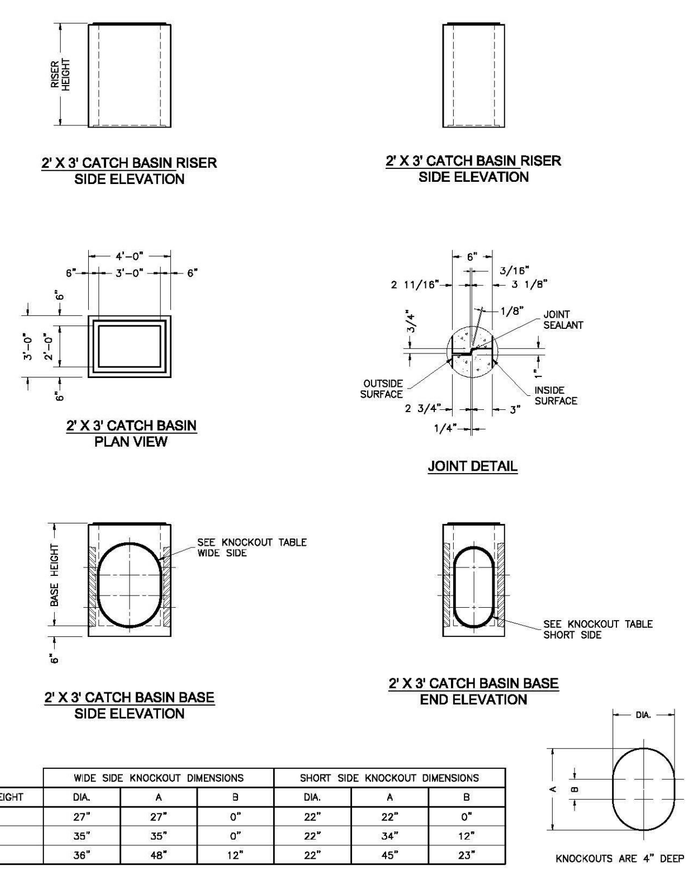

	WIDE SIDE KNOCKOUT DIMENSIONS			SHORT SIDE KNOCKOUT DIMENSIONS		
BASE HEIGHT	DIA.	A	B	DIA.	A	B
3'	27"	27"	0"	22"	22"	0"
4'	35"	35"	0"	22"	34"	12"
5'	36"	48"	12"	22"	45"	23"

Oldcastle Precast
801 West 12th Street
Ogden, Utah 84404

Phone: (801) 399-1171
Fax: (801) 392-7849

For more information about our products, please visit
oldcastleprecast.com

oldcastleprecast.com

© 2008 Oldcastle Precast, Inc.

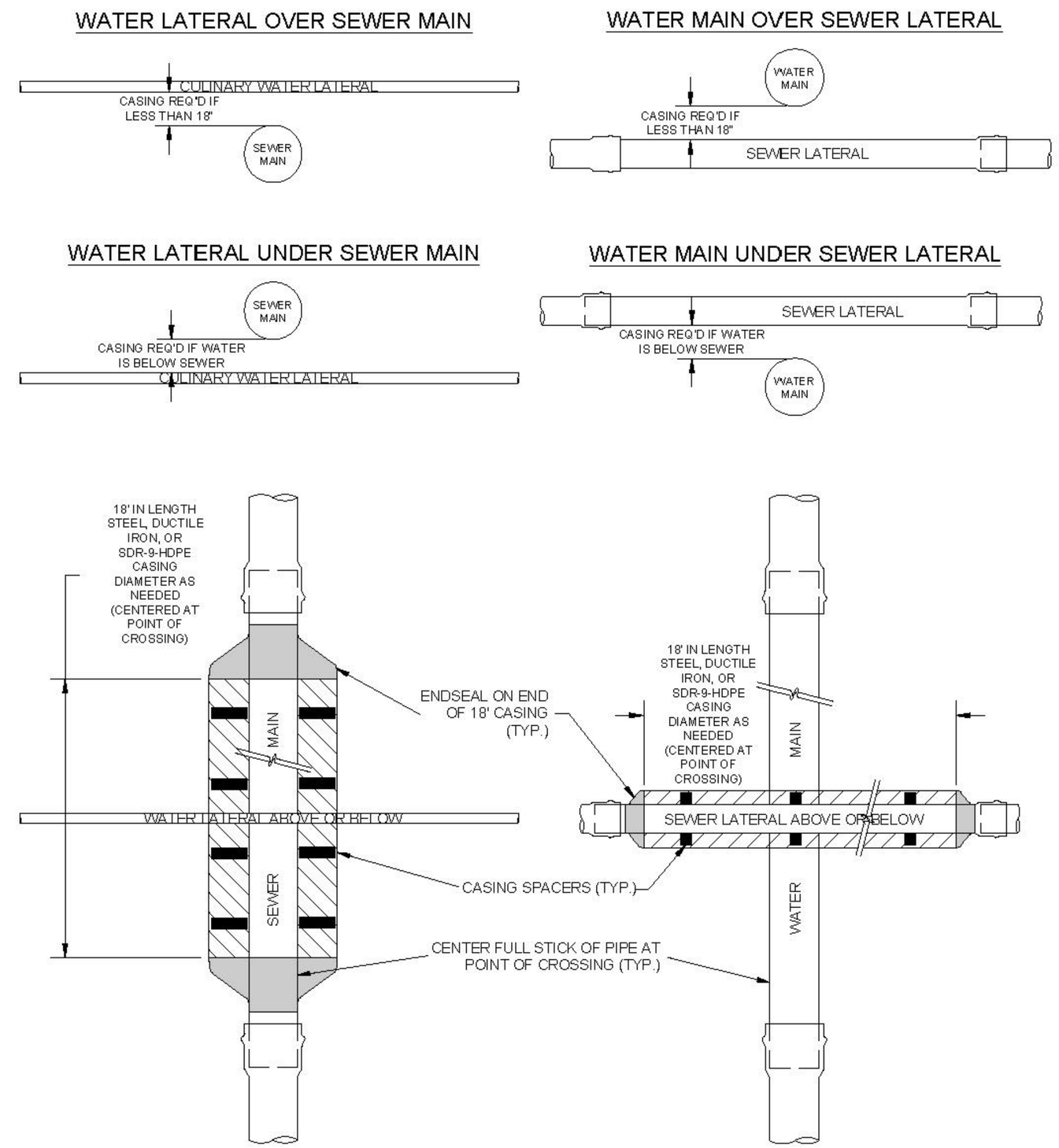

8 SEWER/WATER VERTICAL SEPARATION EXCEPTION DETAIL

NTS

DRAFTED: MDD	DEVIATIONS FROM STANDARDS MUST BE APPROVED BY TAYLOR WEST WEBER WATER IMPROVEMENT DISTRICT. DDW Approval 6/2020	STANDARD WATER DETAILS	
DESIGNED: DW		TAYLOR WEST WEBER	
CHECKED: RR		WATER IMPROVEMENT DISTRICT	
REV 1: 11-12-21 ADDED SEWER/WATER CROSSING		SEWER/WATER CROSSING	SHEET 6
REV 2: 4-21-22 REVISED CASING TO ALWAY'S BE ON SEWER LINES			
REV 3:			
REV 4:			
r:\2001 - bww\standards\2020\2001-details - rev2022-04-21.dwg			

TAYLOR WEST WEBER WATER DISTRICT

GARDNER ENGINEERING
CIVIL • LAND PLANNING
MUNICIPAL • LAND SURVEY
5150 SOUTH 375 EAST OGDEN, UT
OFFICE: 801.476.0202 FAX: 801.476.0

REGISTERED PROFESSIONAL ENGINEER
NO. 368590
ADAM V. MACKELPRANG
4-21-2025
STATE OF UTAH
SEAL

ALLIANCE CONSULTING ENGINEERS
150 EAST 200 NORTH SUITE P
LOGAN, UTAH 84321
(435)755-5121
alliancelogan@yahoo.com

CONFIDENTIALITY AND COPYRIGHT NOTICE
UNAUTHORIZED USE, DISCLOSURE, OR COPYING OF THIS DRAWING IS PROHIBITED.
CONSTRUCTION DOCUMENTS THAT ARE DISTRIBUTED FOR BIDDING PURPOSES SHALL NOT BE RETURNED AND SHALL BE DESTROYED WITHIN 30 DAYS AFTER THE BID OPENING BY THE PLAN HOLDER.
COPYRIGHT 2005

No.	REVISIONS/ SUBMISSIONS	DATE

DRAWN :
PROJECT NO. :
REVIEWED :
CAD FILE :

PROJECT TITLE: TAYLOR LANDING PHASE 1B
A CLUSTER SUBDIVISION

DRAWING TITLE: DETAILS

DATE : MARCH,2025

DRAWING No.