KCC STORES WAREHOUSE

2010 N. RULON WHITE BLVD.

FARR WEST, WEBER COUNTY, UT 84404

PERMIT SUBMITTAL - REV 1

NORTH

1 SITE LOCATION PLAN
N.T.S.

SHEET INDEX

SHEET INDEX

SHEET NUMBER KEY

PHASE → DISCIPLINE → TYPE → SEQUENCE IN TYPE

X-A-201

STATE OF UTAH
TYLER PORTER
LICENSED ARCHITECT
08 OCT 2024

EA SOLUTIONS
324 S. State Street, Suite 444
Salt Lake City, UT 84111
www.easolutions.us
385-549-8600

Rev.	Revision 1	Date	Appr.
1		10/23/24	

Designed by: Designer
Submitted: 08 OCT 2024
REV: 1
Drawn by: CJK
File:
Reviewed by: TP
Scale: As indicated
Submitted by: TP
Project Number: EA24022TP

KCC STORES WAREHOUSE
2010 N. RULON WHITE BLVD.
FARR WEST, UT 84404
PERMIT SUBMITTAL

COVER SHEET

SHEET NUMBER
G-001

PLOT DATE: 11/20/2024 9:58:25 AM

ABBREVIATIONS/ACRONYMS

A.B.	anchor bolt
A/C	air conditioning
ABV	above
ADA	americans with disabilities act
ADD'L	additional
AFF	above finished floor
ALT	alternate
ALUM	aluminum
ANOD	anodized
ANSI	american national standards institute
APPR	approved
APPROX	approximate
ARCH	architect(ural)
ASPH	asphalt
AUTO	automatic
BD	board
BLDG	building
BLK	block
BO	bottom of _____
BRG	bearing
BSMT	basement
BTWN	between
CF	cubic foot
CG	center of gravity
CI	cast iron
CJ	construction joint
CL	center line or column line
CLG	ceiling
CLR	clear(ance), category of logistical responsibility
CMU	concrete masonry unit
COL	column
CONC	concrete
CONST	construction
CONT	continuous, continue
CPT	carpet
CRS	course(s)
CSMT	casement
CY	cubic yard
DE	door elevation
DET	detail
DF	drinking fountain
DF-L	douglas fir
DIA	diameter
DIM	dimension
DIV	division
DL	dead load
DOD	department of defense
DPR	dispenser
DR	door
DWB	deformed weldable bar
DWG	drawing
E	east
EA	each
EJ	expansion joint
ELEC	electrical
ELEV, EL	elevation
EMT	electrical metallic tubing
EN	edge nail
EQ	equal
EQUIP	equipment
EST	estimate
EX	existing
EXP	expansion
EXT	extinguisher
f'c	concrete 28 day strength
f'm	masonry strength
FD	floor drain
FDN	foundation
FE	fire extinguisher
FEC	fire extinguisher cabinet
FGL	fiberglass
FHS	fire hose station
FIN	finish(ed)
FIN. FLR	finished floor elevation
FP	fireplace
FRT	fire-retardant treated
FS	footing step
FT	feet
FTG	footing
GA	gage, guage
GALV	galvanized
GB	grab bar
GD	grade(ing)
GF	government furnished
GI	government installed
GL	glass
GLB	glue laminated timber beam
GYP. BD.	gypsum wall board
HAS	headed anchor stud
HB	hose bib
HC	hollow core
HCAP	handicap
HD	holdown
HDR	header
HDWR	hardware
HM	hollow metal
HOR	horizontal
HR	hour
HRDWD	hardwood
HT	height
HTG	heating
HVAC	heating/ventilating/air cond.
HWH	hot water heater
ID	inside diameter
INCL	include(d), (ing)
INSUL	insulate(d), (ion)
INT	interior
JSN	joint schedule number
JT	joint
LAM	laminate(d)
LAV	lavatory
LF	linear feet
LH	left hand
LL	live load
LP	low pressure
LTL	lintel
LVL	laminated veneer lumber
LW	lightweight
MAS	masonry
MAT'L	material(s)
MAX	maximum
MB	machine bolt
MBR	member
MC	medicine cabinet
MECH	mechanic(al)
MED	medium
MFR	manufacture(r)
MIN	minimum
MISC	miscellaneous
MLB	microllam beam
MMB	membrane
MO	masonry opening
MTL	metal
MULL	mullion
N	north
NIC	not in contract
No.	number
NOM	nominal
NTS	not to scale
O.C.	on center
OD	outside diameter
OH	overhead
OPG	opening
OPP	opposite
OPT	optimum
PBD	particle board
PCB	polychlorinated biphenyls
PL	plate
PNL	panel
PSI	pounds per square inch
PSIG	pounds per square inch gauge
PT	pressure treated or post tension
PTD	painted
PTN	partition
QTY	quantity
R	riser(s), radius
RAD	radius
REA	Rand Eardley & Associates
REINF'D	reinforced
REQ'D	required
REV	revised
RM	room
RO	rough opening
S	south
S.S.	stainless steel
SCHED	schedule(ed)
SECT	section
SF	square feet
SHT	sheet
SIM	similar
SPEC	specifications
SQ	square
STD	standard
STG	storage
STRUC	structure(al)
SW	shear wall
T	tread(s)
T.O.	top of _____
TC	top of curb
TYP	typical
UL	underwriters laboratories
UNO	unless noted otherwise
VB	vapor barrier
VCT	vinyl composition tile
VERT	vertical
W	west
W/	with
W/O	without
WC	water closet
WD	wood
WF	wide flange
WP	water proof(ing)
WR	water repellant
WS	wall step
WSCT	wainscot
WWF	welded wire fabric

STANDARD SYMBOLS

ROOM DESIGNATION — ROOM CODE / Name / Room Number / 150 (Desired Area) / COMMENT

DOOR DESIGNATION — 101A

WINDOW DESIGNATION — A

ELEVATION, (VIEW) — 1 / 2 A1.1 4 / 3

ELEVATION, (DATUM)

NORTH ARROW — NORTH

DETAIL — 1 A101 SIM

DRAWING TITLE — 1 View Name 1/8" = 1'-0"

REVISION DESIGNATION — 1

GRID HEAD — 0

LINE TYPES

MATCH

PROPERTY

GRID

HIDDEN

REMOVAL

OVERHEAD

ARCHITECTURAL MATERIALS

STEEL STUD

GYPSUM BOARD CEILING / WALL

LAY-IN ACOUSTICAL CEILING

CONCRETE

CARPET / TILE (SECTION)

PLYWOOD (SECTION)

MASONRY WALL

TEMPORARY WALL

STATE OF UTAH — RYAN MICHAEL EDWARDS — 10 OCT 2024 — LICENSED ARCHITECT

EA SOLUTIONS
324 S. State Street, Suite 444
Salt Lake City, UT 84111
www.easolutions.us
385-549-8800

Rev.	Revision 1	Date	Appr.
1	Description	10/23/24	

Designed by: RME
Drawn by:
Reviewed by: RME
Submitted by:
Submitted: 08 OCT 2024
File:
Scale: 1 : 1
Project Number: EA24022TP
REV: 1

KCC STORES WAREHOUSE

2010 N. RULON WHITE BLVD.
FARR WEST, UT 84404
PERMIT SUBMITTAL

GENERAL NOTES, SYMBOLS, ABBREVIATIONS

SHEET NUMBER
G-002

PLOT DATE: 11/20/2024 9:58:27 AM

STRUCTURAL STEEL SPECIAL INSPECTION SCHEDULE

ESTABLISHED PER 2021 IBC SECTION 1705.2.1

INSPECTION TASKS PRIOR TO WELDING (TABLE N5.4-1)	FABRICATOR QUALITY CONTROL		SPECIAL INSPECTOR QUALITY ASSURANCE	
	CONTINUOUS	PERIODIC	CONTINUOUS	PERIODIC
WELDER QUALIFICATION RECORDS AND CONTINUITY RECORDS	●			●
WELDING PROCEDURE SPECIFICATIONS (WPSs) AVAILABLE	●		●	
MANUFACTURER CERTIFICATIONS FOR WELDING CONSUMABLES AVAILABLE	●		●	
MATERIAL IDENTIFICATION (TYPE / GRADE)		●		●
WELDER IDENTIFICATION SYSTEM [1]		●		●
FIT-UP OF GROOVE WELDS (INCLUDING JOINT GEOMETRY)				
* JOINT PREPARATION				
* DIMENSIONS (ALIGNMENT, ROOT OPENING, ROOT FACE, BEVEL)				
* CLEANLINESS (CONDITION OF STEEL SURFACES)		●		●
* TACKING (TACK WELD QUALITY AND LOCATION)				
* BACKING TYPE AND FIT (IF APPLICABLE)				
FIT-UP OF CJP GROOVE WELDS OFHSS T-, Y-, AND K-JOINTS WITHOUT BACKING (INCLUDING JOINT GEOMETRY)				
* JOINT PREPARATIONS				
* DIMENSIONS (ALIGNMENT, ROOT OPENING, ROOT FACE, BEVEL)	●			●
* CLEANLINESS (CONDITION OF STEEL SURFACES)				
* TACKING (TACK WELD QUALITY AND LOCATION)				
CONFIGURATION AND FINISH OF ACCESS HOLES		●		●
FIT-UP OF FILLET WELDS				
* DIMENSIONS (ALIGNMENT, GAPS AT ROOT)				
* CLEANLINESS (CONDITION OF STEEL SURFACES)		●		●
* TACKING (TACK WELD QUALITY AND LOCATION)				
CHECK WELDING EQUIPMENT		●		

[1] THE FABRICATOR OR ERECTOR, AS APPLICABLE, SHALL MAINTAIN A SYSTEM BY WHICH A WELDER WHO HAS WELDED A JOINT OR MEMBER CAN BE IDENTIFIED. STAMPS, IF USED, SHALL BE THE LOW-STRESS TYPE.

INSPECTION TASKS DURING WELDING (TABLE N5.4-2)	CONTINUOUS	PERIODIC	CONTINUOUS	PERIODIC
CONTROL AND HANDLING OF WELDING CONSUMABLES				
* PACKAGING		●		●
* EXPOSURE CONTROL				
NO WELDING OVER CRACKED TACK WELDS		●		●
ENVIRONMENTAL CONDITIONS				
* WIND SPEED WITHIN LIMITS		●		●
* PRECIPITATION AND TEMPERATURE				
WPS FOLLOWED				
* SETTINGS ON WELDING EQUIPMENT				
* TRAVEL SPEED				
* SELECTED WELDING MATERIALS		●		●
* SHIELDING GAS TYPE / FLOW RATE				
* PREHEAT APPLIED				
* INTERPASS TEMPERATURE MAINTAINED (MIN. / MAX)				
* PROPER POSITION (F, V, H, OH)				
WELDING TECHNIQUES				
* INTERPASS AND FINAL CLEANING				
* EACH PASS WITHIN PROFILE LIMITATIONS		●		●
* EACH PASS MEETS QUALITY REQUIREMENTS				
PLACEMENT AND INSTALLATION OF STEEL HEADED STUD ANCHORS	●		●	

INSPECTION TASKS AFTER WELDING (TABLE N5.4-3)	CONTINUOUS	PERIODIC	CONTINUOUS	PERIODIC
WELDS CLEANED		●		●
SIZE, LENGTH AND LOCATION OF WELDS	●		●	
WELDS MEET VISUAL ACCEPTANCE CRITERIA				
* CRACK PROHIBITION				
* WELD / BASE-METAL FUSION				
* CRATER CROSS SECTION	●		●	
* WELD PROFILES				
* WELD SIZE				
* UNDERCUT				
* POROSITY				
ARC STRIKES	●		●	
K-AREA [1]	●		●	
WELD ACCESS HOLES IN ROLLED HEAVY SHAPES AND BUILT-UP HEAVY SHAPES [2]	●		●	
BACKING REMOVED AND WELD TABS REMOVED (IF REQUIRED)	●		●	
REPAIR ACTIVITIES	●		●	
DOCUMENT ACCEPTANCE OR REJECTION OF WELDED JOINT OR MEMBER	●		●	
NO PROHIBITED WELDS HAVE BEEN ADDED WITHOUT THE APPROVAL OF THE EOR		●		●

[1] WHEN WELDING OF DOUBLER PLATES, CONTINUITY PLATES OR STIFFENERS HAS BEEN PERFORMED IN THE K-AREA, VISUALLY INSPECT THE WEB K-AREA FOR CRACKS WITHIN 3 IN. (75mm) OF THE WELD)
[2] AFTER ROLLED HEAVY SHAPES (SEE SECTION A3.1c) AND BUILT-UP HEAVY SHAPES (SEE SECTION A3.1d) ARE WELDED, VISUALLY INSPECT THE WELD ACCESS HOLE FOR CRACKS.

NOTES

1. PERIODIC - OBSERVE THESE ITEMS ON A RANDOM BASIS. OPERATIONS NEED NOT BE DELAYED PENDING THESE INSPECTIONS.
2. CONTINUOUS - PERFORM THESE TASKS FOR EACH WELDED JOINT OR MEMBER.
3. QUALITY CONTROL (QC) SHALL BE PROVIDED BY THE FABRICATOR AND ERECTOR.
4. QUALITY ASSURANCE (QA) SHALL BE PROVIDED BY OTHERS WHEN REQUIRED BY THE AUTHORITY HAVING JURISDICTION (AHJ), APPLICABLE BUILDING CODE (ABC), PURCHASER, OWNER, OR ENGINEER OF RECORD (EOR). NONDESTRUCTIVE TESTING (NDT) SHALL BE PERFORMED BY THE AGENCY OR FIRM RESPONSIBLE FOR QUALITY ASSURANCE, EXCEPT AS PERMITTED IN ACCORDANCE WITH SECTION N6.
5. QC AND QA INSPECTORS SHALL BE QUALIFIED IN ACCORDANCE WITH AISC 360-16 CHAPTER N4.
6. NONDESTRUCTIVE TESTING PERSONNEL SHALL BE QUALIFIED IN ACCORDANCE WITH AISC 360-16 CHAPTER N4.3.
7. NONDESTRUCTIVE TESTING OF WELDED JOINTS SHALL COMPLY WITH AISC 360-16 CHAPTER N5.5a AND b.
8. OBSERVATION OF WELDING OPERATIONS AND VISUAL INSPECTION OF IN-PROCESS AND COMPLETED WELDS SHALL BE THE PRIMARY METHOD TO CONFIRM THAT THE MATERIALS, PROCEDURES AND WORKMANSHIP ARE IN CONFORMANCE WITH THE CONSTRUCTION DOCUMENTS. FOR STRUCTURAL STEEL, ALL PROVISIONS OF AWS D1.1 / D1.1M STRUCTURAL WELDING CODE - STEEL FOR STATICALLY LOADED STRUCTURES SHALL APPLY.
9. THERMALLY CUT SURFACES OF ACCESS HOLES SHALL BE TESTED BY QA USING MT OR PT, WHEN THE FLANGE THICKNESS EXCEEDS 2 IN. (50mm) FOR ROLLED SHAPES, OR WHEN THE WEB THICKNESS EXCEEDS 2 IN. (50mm) FOR BUILT-UP SHAPES. ANY CRACK SHALL BE DEEMED UNACCEPTABLE REGARDLESS OF SIZE OR LOCATION.
10. WHEN REQUIRED BY APPENDIX 3, TABLE A-3.1, WELDED JOINTS REQUIRING WELD SOUNDNESS TO BE ESTABLISHED BY RADIOGRAPHICS OR ULTRASONIC INSPECTION SHALL BE TESTED BY QA AS PRESCRIBED. REDUCTION IN THE RATE OF UT IS PROHIBITED.
11. REDUCTION OF RATE OF ULTRASONIC TESTING - THE RATE OF UT IS ONLY PERMITTED TO BE REDUCED IF APPROVED BY THE EOR AND THE AHJ PER AISC 360-16 CHAPTER N5.5e.
12. FOR STRUCTURES IN RISK CATEGORY II, WHERE THE INITIAL RATE FOR UT IS 10%, THE NDT RATE FOR AN INDIVIDUAL WELDER OR WELDING OPERATOR SHALL BE INCREASED TO 100% SHOULD THE REJECT RATE, THE NUMBER OF WELDS CONTAINING UNACCEPTABLE DEFECTS DIVIDED BY THE NUMBER OF WELDS COMPLETED, EXCEEDS 5% OF THE WELDS TESTED FOR THE WELDER OR WELDING OPERATOR. A SAMPLING OF AT LEAST 20 COMPLETED WELDS FOR A JOB SHALL BE MADE PRIOR TO IMPLEMENTING SUCH AN INCREASE. WHEN THE REJECT RATE FOR THE WELDER OR WELDING OPERATOR, AFTER A SAMPLING OF AT LEAST 40 COMPLETED WELDS, HAS FALLEN TO 5% OR LESS, THE RATE OF UT SHALL BE RETURNED TO 10%. FOR EVALUATING THE REJECT RATE OF CONTINUOUS WELDS OVER 3 FT (1M) IN LENGTH WHERE THE EFFECTIVE THROAT IS 1 IN. (25mm) OR LESS, EACH 12 IN. (300mm) INCREMENT OR FRACTION THEREOF SHALL BE CONSIDERED AS ONE WELD. FOR EVALUATING THE REJECT RATE ON CONTINUOUS WELDS OVER 3 FT (1M) IN LENGTH WHERE THE EFFECTIVE THROAT IS GREATER THAN 1 IN. (25mm), EACH 6 IN. (150mm) OF LENGTH OR FRACTION THEREOF SHALL BE CONSIDERED ON WELD.
13. ALL NDT PERFORMED SHALL BE DOCUMENTED. FOR SHOP FABRICATION, THE NDT REPORT SHALL IDENTIFY THE TESTED WELD BY PIECE MARK AND LOCATION IN THE PIECE. FOR FIELD WORK, THE NDT REPORT SHALL IDENTIFY THE TESTED WELD BY LOCATION IN THE STRUCTURE, PIECE MARK, AND LOCATION IN THE PIECE. WHEN A WELD IS REJECTED ON THE BASIS OF NDT, THE NDT RECORD SHALL INDICATE THE LOCATION OF THE DEFECT AND THE BASIS OF REJECTION
14. DEMAND CRITICAL WELDS SHALL MEET THE PROVISION FOUND IN AISC 341-16 AND WELDING METHODS, PROCEDURES AND QUALITY CONTROL SHALL COMPLY WITH AWS D1.1 AND THE FOLLOWING:
    a. ARC STRIKES, GOUGES AND OTHER IMPERFECTIONS WITHIN OR ADJACENT TO THE JOINT, SHALL BE REPAIRED OR REMOVED.
    b. PREHEAT AND INTER-PASS REQUIREMENTS AS OUTLINED IN SECTION 3.5.
    c. UNREPAIRED CRACKS, GOUGES, AND NOTCHES WILL NOT BE PERMITTED IN THE JOINT AREA.
    d. USE ELECTRODES WITH CHARPY V-NOTCH ABSORBED ENERGY EQUAL TO OR GREATER THAN 20 FT-LBS AT 20 DEGREES FAHRENHEIT UNDER AWS A5 CLASSIFICATION TEST METHODS, AND 40 FT-LBS AT 70 DEGREES FAHRENHEIT USING TEST PROCEDURES PRESCRIBED IN APPENDIX X OF AISC 358. ACCEPTABLE ELECTRODES INCLUDE E70TG-K2, E71 T-1.

INSPECTION TASKS PRIOR TO BOLTING (TABLE N5.6-1)	CONTINUOUS	PERIODIC	CONTINUOUS	PERIODIC
MANUFACTURER'S CERTIFICATIONS AVAILABLE FOR FASTENER MATERIALS		●	●	
FASTENERS MARKED IN ACCORDANCE WITH ASTM REQUIREMENTS		●		●
PROPER FASTENERS SELECTED FOR THE JOINT DETAIL (GRADE, TYPE, BOLT LENGTH IF THREADS ARE TO BE EXCLUDED FROM SHEAR PLANE)		●		●
PROPER BOLTING PROCEDURES SELECTED FOR JOINT DETAIL		●		●
CONNECTING ELEMENTS, INCLUDING THE APPROPRIATE FAYING SURFACE CONDITION AND HOLE PREPARATION, IF SPECIFIED, MEET APPLICABLE REQUIREMENTS		●		●
PRE-INSTALLATION VERIFICATION TESTING BY INSTALLATION PERSONNEL OBSERVED AND DOCUMENTED FOR FASTENER ASSEMBLIES AND METHODS USED	●			●
PROPER STORAGE PROVIDED FOR BOLTS, NUTS, WASHERS AND OTHER FASTENER COMPONENTS		●		●

INSPECTION TASKS DURING BOLTING (TABLE N5.6-2)	CONTINUOUS	PERIODIC	CONTINUOUS	PERIODIC
FASTENER ASSEMBLIES, PLACED IN ALL HOLES AND WASHERS (IF REQUIRED) ARE POSITIONED AS REQUIRED		●		●
JOINT BROUGHT TO THE SNUG-TIGHT CONDITION PRIOR TO THE PRETENSIONING OPERATION		●		●
FASTENER COMPONENT NOT TURNED BY THE WRENCH PREVENTED FROM ROTATING		●		●
FASTENERS ARE PRETENSIONED IN ACCORDANCE WITH THE RCSC SPECIFICATION, PROGRESSING SYSTEMATICALLY FROM THE MOST RIGID POINT TOWARD THE FREE EDGES		●		●

INSPECTION TASKS AFTER BOLTING (TABLE N5.6-3)	CONTINUOUS	PERIODIC	CONTINUOUS	PERIODIC
DOCUMENT ACCEPTANCE OR REJECTION OF BOLTED CONNECTIONS	●		●	

NOTES

1. PERIODIC - OBSERVE THESE ITEMS ON A RANDOM BASIS. OPERATIONS NEED NOT BE DELAYED PENDING THESE INSPECTIONS.
2. CONTINUOUS - PERFORM THESE TASKS FOR EACH BOLTED CONNECTION.
3. QUALITY CONTROL (QC) SHALL BE PROVIDED BY THE FABRICATOR AND ERECTOR.
4. QUALITY ASSURANCE (QA) SHALL BE PROVIDED BY OTHERS WHEN REQUIRED BY THE AUTHORITY HAVING JURISDICTION (AHJ), APPLICABLE BUILDING CODE (ABC), PURCHASER, OWNER, OR ENGINEER OF RECORD (EOR). NONDESTRUCTIVE TESTING (NDT) SHALL BE PERFORMED BY THE AGENCY OR FIRM RESPONSIBLE FOR QUALITY ASSURANCE, EXCEPT AS PERMITTED IN ACCORDANCE WITH SECTION N7.
5. FOR SNUG-TIGHT JOINTS, PRE-INSTALLATION VERIFICATION TESTING AS SPECIFIED IN TABLE N5.6-1 AND MONITORING OF THE INSTALLATION PROCEDURES AS SPECIFIED IN TABLE N5.6-2 ARE NOT APPLICABLE. THE QCI AND QAI NEED NOT BE PRESENT DURING THE INSTALLATION OF FASTENERS IN SNUG-TIGHT JOINTS.
6. FOR PRETENSIONED JOINTS AND SLIP-CRITICAL JOINTS, WHEN THE INSTALLER IS USING THE TURN-OF-NUT METHOD WITH MATCHMARKING TECHNIQUES, THE DIRECT-TENSION-INDICATOR METHOD, OR THE TWIST-OFF-TYPE TENSION CONTROL BOLT METHOD, MONITORING OF BOLT PRETENSIONING PROCEDURES SHALL BE AS SPECIFIED IN TABLE N5.6-2. THE QCI AND QAI NEED NOT BE PRESENT DURING THE INSTALLATION OF FASTENERS WHEN THESE METHODS ARE USED BY THE INSTALLER.
7. FOR PRETENSIONED JOINTS AND SLIP-CRITICAL JOINTS, WHEN THE INSTALLER IS USING THE CALIBRATED WRENCH METHOD OR THE TURN-OF-NUT METHOD WITHOUT MATCHMARKING, MONITORING OF BOLT PRETENSIONING PROCEDURES SHALL BE AS SPECIFIED IN TABLE N5.6-2. THE QCI AND QAI SHALL BE ENGAGED IN THEIR ASSIGNED INSPECTION DUTIES DURING INSTALLATION OF FASTENERS WHEN THESE METHODS ARE USED BY THE INSTALLER.
8. OBSERVATION OF BOLTING OPERATIONS SHALL BE THE PRIMARY METHOD USED TO CONFIRM THAT THE MATERIALS, PROCEDURES AND WORKMANSHIP INCORPORATED IN CONSTRUCTION ARE IN CONFORMANCE WITH THE CONSTRUCTION DOCUMENTS AND THE PROVISIONS OF THE RCSC SPECIFICATION.

GENERAL STEEL SPECIAL INSPECTION NOTES :

1. QUALITY ASSURANCE (QA) INSPECTION OF FABRICATED ITEMS SHALL BE MADE AT THE FABRICATOR'S PLANT. THE QUALITY ASSURANCE INSPECTOR (QAI) SHALL SCHEDULE THIS WORK TO MINIMIZE INTERRUPTION TO THE WORK OF THE FABRICATOR.
2. QA INSPECTION OF THE ERECTED STEEL SYSTEM SHALL BE MADE AT THE PROJECT SITE. THE QAI SHALL SCHEDULE THIS WORK TO MINIMIZE INTERRUPTION TO THE WORK OF THE ERECTOR.
3. WHERE A TASK IS NOTED TO BE PERFORMED BY BOTH QC AND QA, IT IS PERMITTED TO COORDINATE THE INSPECTION FUNCTION BETWEEN THE QCI AND QAI SO THAT THE INSPECTION FUNCTIONS ARE PERFORMED BY ONLY ONE PARTY. WHERE QA RELIES UPON INSPECTION FUNCTIONS PERFORMED BY QC, THE APPROVAL OF THE ENGINEER OF RECORD AND THE AUTHORITY HAVING JURISDICTION IS REQUIRED.
4. THE FABRICATOR'S QCI SHALL INSPECT THE FABRICATED STEEL TO VERIFY COMPLIANCE WITH THE DETAILS SHOWN ON THE SHOP DRAWINGS, SUCH AS PROPER APPLICATION OF JOINT DETAILS AT EACH CONNECTION. THE ERECTOR'S QCI SHALL INSPECT THE ERECTED STEEL FRAME TO VERIFY COMPLIANCE WITH THE DETAILS SHOWN ON THE ERECTION DRAWINGS, SUCH AS BRACES, STIFFENERS, MEMBER LOCATIONS AND PROPER APPLICATION OF JOINT DETAILS AT EACH CONNECTION.
5. THE QAI SHALL BE ON THE PREMISES FOR INSPECTION DURING THE PLACEMENT OF ANCHOR RODS AND OTHER EMBEDMENTS SUPPORTING STRUCTURAL STEEL FOR COMPLIANCE WITH THE CONSTRUCTION DOCUMENTS. AS A MINIMUM, THE DIAMETER, GRADE, TYPE AND LENGTH OF THE ANCHOR ROD OR EMBEDDED ITEM, AND THE EXTENT OR DEPTH OF EMBEDMENT INTO THE CONCRETE, SHALL BE VERIFIED PRIOR TO PLACEMENT OF THE CONCRETE.
6. THE QAI SHALL INSPECT THE FABRICATED STEEL OR ERECTED STEEL FRAME, AS APPROPRIATE, TO VERIFY COMPLIANCE WITH THE DETAILS SHOWN ON THE CONSTRUCTION DOCUMENTS, SUCH AS BRACES, STIFFENERS, MEMBER LOCATIONS AND PROPER APPLICATION OF JOINT DETAILS AT EACH CONNECTION.
7. QUALITY ASSURANCE (QA) INSPECTIONS, EXCEPT NONDESTRUCTIVE TESTING (NDT), MAY BE WAIVED WHEN THE WORK IS PERFORMED IN A FABRICATING SHOP OR BY AN ERECTOR APPROVED BY THE AUTHORITY HAVING JURISDICTION (AHJ) TO PERFORM THE WORK WITHOUT QA. NDT OF WELDS COMPLETED IN AN APPROVED FABRICATOR'S SHOP MAY BE PERFORMED BY THAT FABRICATOR WHEN APPROVED BY THE AHJ. WHEN THE FABRICATOR PERFORMS THE NDT, THE QA AGENCY SHALL REVIEW THE FABRICATOR'S NDT REPORTS.
8. AT COMPLETION OF FABRICATION, THE APPROVED FABRICATOR SHALL SUBMIT A CERTIFICATE OF COMPLIANCE TO THE AHJ STATING THAT THE MATERIALS SUPPLIED AND WORK PERFORMED BY THE FABRICATOR ARE IN ACCORDANCE WITH THE CONSTRUCTION DOCUMENTS. AT COMPLETION OF ERECTION, THE APPROVED ERECTOR SHALL SUBMIT A CERTIFICATE OF COMPLIANCE TO THE AHJ STATING THAT THE MATERIALS SUPPLIED AND WORK PERFORMED BY THE ERECTOR ARE IN ACCORDANCE WITH THE CONSTRUCTION DOCUMENTS.
9. IDENTIFICATION AND REJECTION OF MATERIAL OR WORKMANSHIP THAT IS NOT IN CONFORMANCE WITH THE CONSTRUCTION DOCUMENTS, SHALL BE PERMITTED AT ANY TIME DURING THE PROGRESS OF THE WORK. HOWEVER, THIS PROVISION SHALL NOT RELIEVE THE OWNER OR THE INSPECTOR OF THE OBLIGATION FOR TIMELY, IN-SEQUENCE INSPECTIONS. NONCONFORMING MATERIAL AND WORKMANSHIP SHALL BE BROUGHT TO THE IMMEDIATE ATTENTION OF THE FABRICATOR OR ERECTOR, AS APPLICABLE.
10. NONCONFORMING MATERIAL OR WORKMANSHIP SHALL BE BROUGHT INTO CONFORMANCE, OR MADE SUITABLE FOR ITS INTENDED PURPOSE AS DETERMINED BY THE ENGINEER OF RECORD.
11. CONCURRENT WITH THE SUBMITTAL OF SUCH REPORTS TO THE AHJ, EOR OR OWNER, THE QA AGENCY SHALL SUBMIT TO THE FABRICATOR AND ERECTOR:
    (1) NONCONFORMANCE REPORTS
    (2) REPORTS OF REPAIR, REPLACEMENT OR ACCEPTANCE OF NONCONFORMING ITEMS.

Sched18I - 2021 Structural Steel Special Inspection

STATE OF UTAH — RICHARD MOSER — 5479711 — STRUCTURAL — 08 OCT 2024

EA SOLUTIONS
324 S. State Street, Suite 444
Salt Lake City, UT 84111
www.easolutions.us
385-549-8600

Rev.	Description	Date	Appr.
1	Revision 1	10/23/24	

Designed by: RME
Drawn by:
Reviewed by: RME
Submitted by:
Submitted: 08 OCT 2024
File:
Scale: 3/4" = 1'-0"
Project Number: Ex24022TP
REV: 1

KCC STORES WAREHOUSE

2010 N. RULON WHITE BLVD.
FARR WEST, UT 84404
PERMIT SUBMITTAL

STRUCTURAL STEEL SPECIAL INSPECTION SCHEDULE

SHEET NUMBER
G-003

PLOT DATE: 11/20/2024 9:58:28 AM

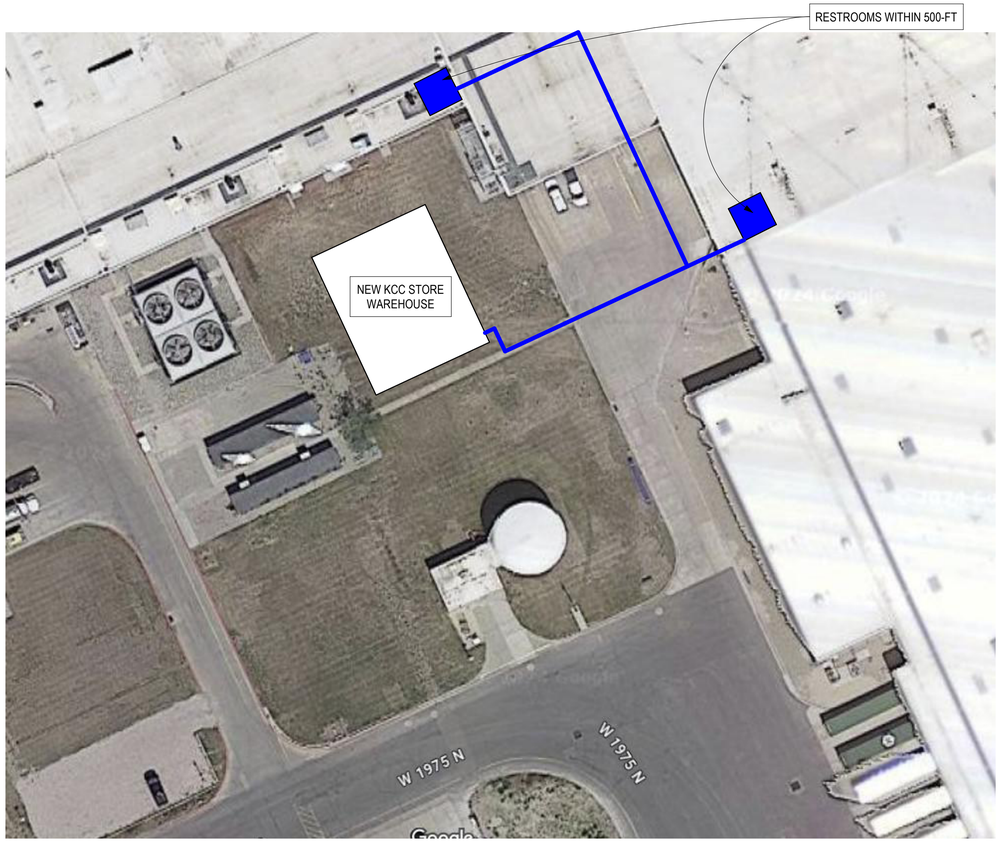

NORTH

2 RESTROOM LOCATIONS
N.T.S.

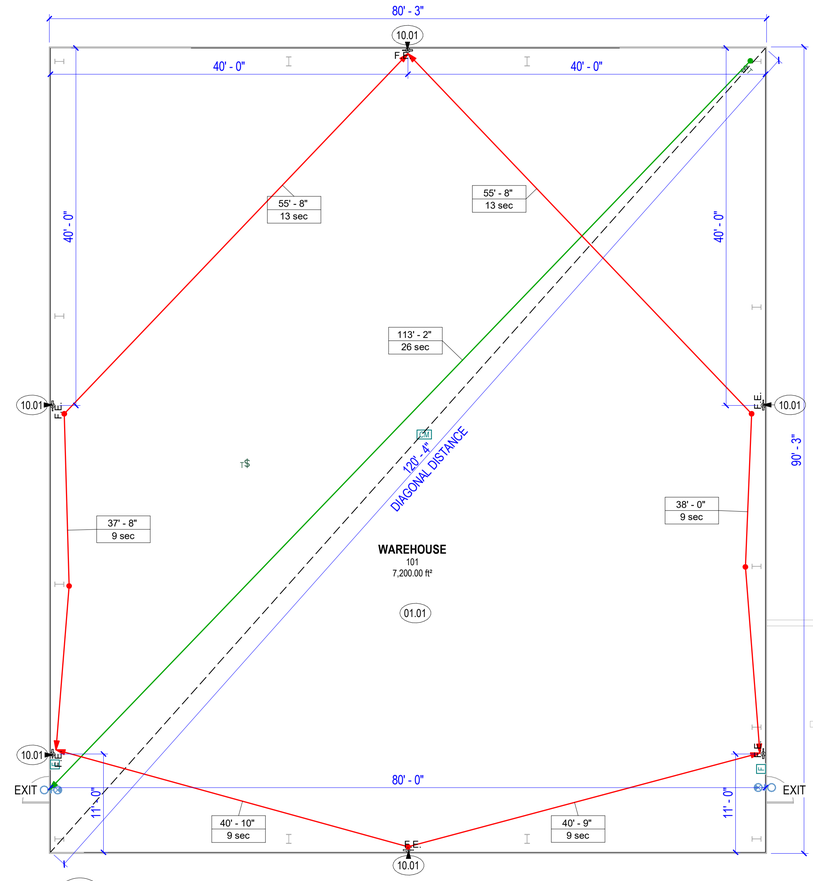

NORTH

1 FIRST LEVEL LIFE SAFETY PLAN
1/8" = 1'-0"

KEYED NOTES

01.01 STRUCTURES UNDER CONSTRUCTION, ALTERATION OR DEMOLITION SHALL BE PROVIDED WITH NOT FEWER THAN ONE APPROVED PORTABLE FIRE EXTINGUISHER IN ACCORDANCE WITH IBC SECTION 906 AND SIZED FOR NOT LESS THAN ORDINARY HAZARDS AS FOLLOWS PER IBC 3309.1: ON ALL FLOOR LEVELS WHERE COMBUSTIBLE MATERIALS HAVE ACCUMULATED, IN EVERY STORAGE AND CONSTRUCTION SHED, ADDITIONAL PORTABLE FIRE EXTINGUISHERS SHALL BE PROVIDED WHERE SPECIAL HAZARDS EXIST, SUCH AS THE STORAGE AND USE OF FLAMMABLE AND COMBUSTIBLE LIQUIDS

10.01 WALL-MOUNTED FIRE EXTINGUISHER, SEE SHEET A-501 FOR MOUNTING HEIGHT

LIFE SAFETY PLAN LEGEND

- EXIT SIGN
- LIFE SAFETY EGRESS PATH
- FIRE EXTINGUISHER DISTANCE
- E.E. WALL MOUNTED FIRE EXTINGUISHER
- H FIRE ALARM, HORN - STROBE
- F FIRE ALARM PULL STATION

APPLICABLE CODES

2021 INTERNATIONAL BUILDING CODE, INCLUDING APPENDIX J
2021 INTERNATIONAL MECHANICAL CODE
2021 INTERNATIONAL PLUMBING CODE
2021 INTERNATIONAL FIRE CODE
2021 INTERNATIONAL FUEL GAS CODE
2020 NATIONAL ELECTRIC CODE
2021 INTERNATIONAL ENERGY CONSERVATION CODE
ICC A117.1-2009 STANDARD FOR ACCESSIBLE AND USABLE BUILDINGS AND FACILITIES

0' 2' 4' 8' 16' 32'
GRAPHIC SCALE 1/8" = 1'-0"

EA SOLUTIONS
324 S. State Street, Suite 444
Salt Lake City, UT 84111
www.easolutions.us
385-549-8600

Rev.	Revision 1	Description	Date	Appr.
1			10/23/24	

REV: 1
Submitted: 08 OCT 2024
File:
Scale: As indicated
Project Number: EA24022TP
Designed by: Designer
Drawn by: CJK
Reviewed by: TRP
Submitted by: TRP

KCC STORES WAREHOUSE

2010 N. RULON WHITE BLVD.
FARR WEST, UT 84404
PERMIT SUBMITTAL

FIRST LEVEL LIFE SAFETY PLAN

SHEET NUMBER
LP101

PLOT DATE: 11/20/2024 9:58:30 AM

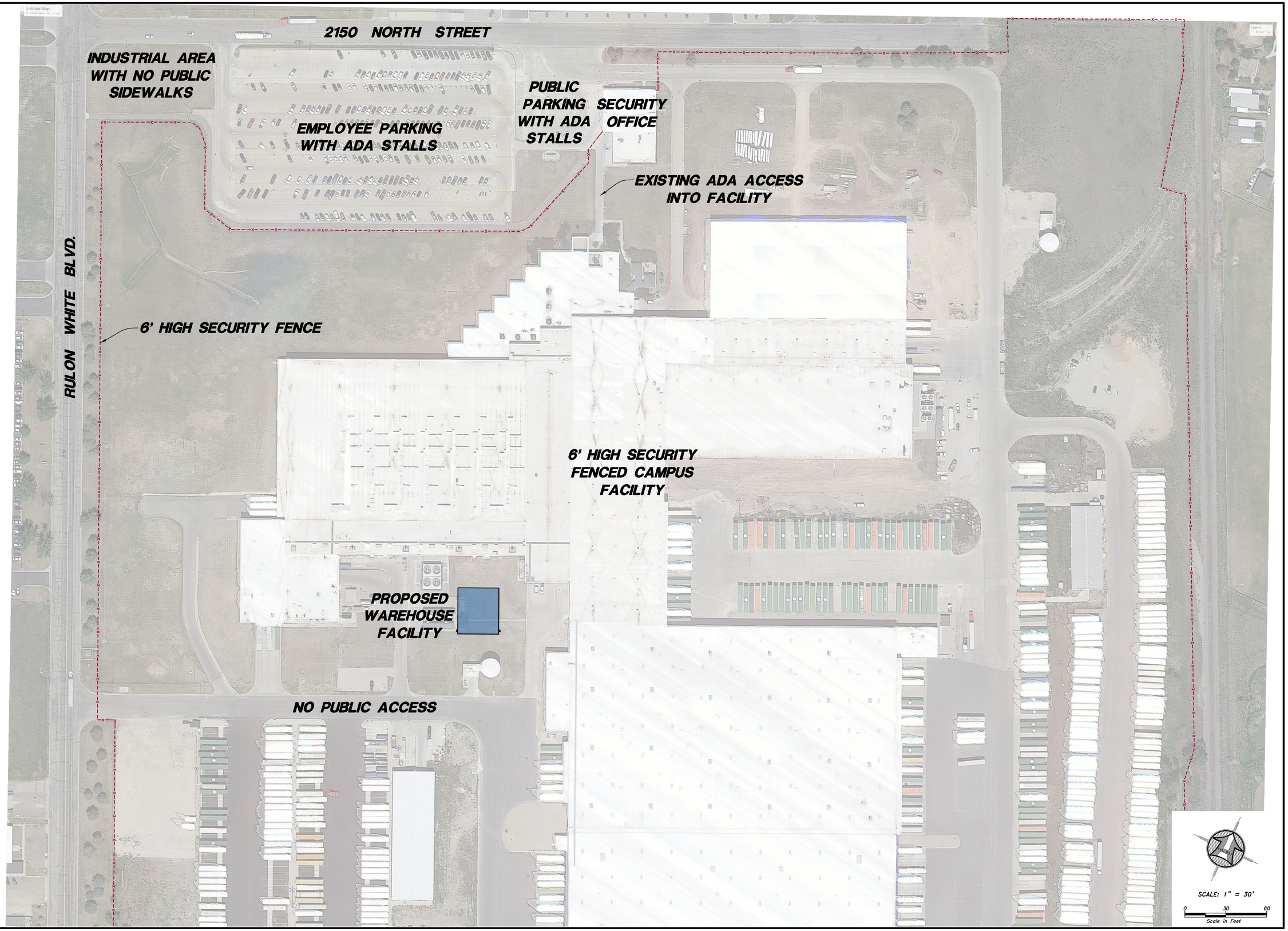

No.	Date	By:	Revision

HANSEN & ASSOCIATES, INC.
Consulting Engineers and Land Surveyors
538 North Main Street, Brigham, Utah 84302
Visit us at www.hales.net
WEBER COUNTY Ogden Logan
(435) 723-3491 (801) 399-4905 (435) 752-8272
Celebrating 60 Years of Business

Drawn By: MSJ Date: 11/04/24
Designed By:
Checked By:
Approved By:
Scale: 1" = 30'
Drawing File: 24-5-9 V23.DWG
JOB NUMBER: 24-5-9

OVERALL CAMPUS FACILITY & PUBLIC ADA ACCESS FOR

KCC STORES WAREHOUSE

2150 N. Rulon White Blvd.
Farr West, Weber County, Utah

Sheet
C-100

EXISTING BUILDING
FFE: 4294.54

"CAUTION"
ALL EXISTING UNDERGROUND ELECTRICAL, POWER DUCT BANK AND WATERLINES TO REMAIN UNDISTURBED. THE PROPOSED BUILDING FOOTING TO BE INSTALLED ABOVE EXISTING UTILITY. STEP FOOTING AS NEEDED TO MAINTAIN FROST COVERAGE. POTHOLE FOUNDATION CROSSINGS PRIOR TO CONSTRUCTION TO VERIFY ELEVATION. (SEE DETAIL THIS SHEET)

PROPOSED BUILDING
FFE: 4293.00

EX. BUILDING

1975 NORTH STREET

EX. GUARD SHACK

POWER DUCT BANK - SECTION 'B'
N.T.S.
(PLANT TO MANHOLE #1)

Engineer's Notice To Contractors

The existence and location of any underground utility pipes or structures shown on these plans were obtained from available information provided by others. The locations shown are approximate and shall be confirmed in the field by the contractor, so that any necessary adjustment can be made in alignment and/or grade of the proposed improvement. The contractor is required to contact the utility companies and take due precautionary measure to protect any utility lines shown, and any other lines obtained by the contractors research, and others not of record or not shown on these plans.

NOTICE!

EXISTING UTILITIES ARE SHOWN ON PLANS FOR THE CONVENIENCE OF THE CONTRACTOR ONLY. THE CONTRACTOR IS RESPONSIBLE FOR THE PROTECTION OF ALL UTILITIES. THE ENGINEER BEARS NO RESPONSIBILITY FOR UTILITIES NOT SHOWN OR SHOWN INCORRECTLY.

AVOID CUTTING UNDERGROUND UTILITIES. IT'S COSTLY.
Call BEFORE YOU Dig
1-800-662-4111
UNDERGROUND SERVICE

SCALE: 1" = 30'
0 30 60
Scale in Feet

No.	Date	By	Revision
1.	11/04/24	MBJ	REVIEW COMMENTS – ADD STAMP & SIGNATURE

PROFESSIONAL ENGINEER
No. 166832
JAMES B. FLINT
STATE OF UTAH
REGISTERED

HANSEN & ASSOCIATES, INC.
Consulting Engineers and Land Surveyors
538 North Main Street, Brigham, Utah 84302
Visit us at www.hales.net
WEBER COUNTY Ogden (801) 399-4905 Logan (435) 752-8272
(435) 723-3491
Celebrating 80 Years of Business

Drawn By: MBJ Date: 11/04/24
Designed By:
Checked By:
Approved By:
Scale: 1" = 30'
Drawing File: 24-5-9 V23.DWG
JOB NUMBER: 24-5-9

OVERALL SITE PLAN FOR

KCC STORES WAREHOUSE

2150 N. Rulon White Blvd.
Farr West, Weber County, Utah

Sheet
C-101

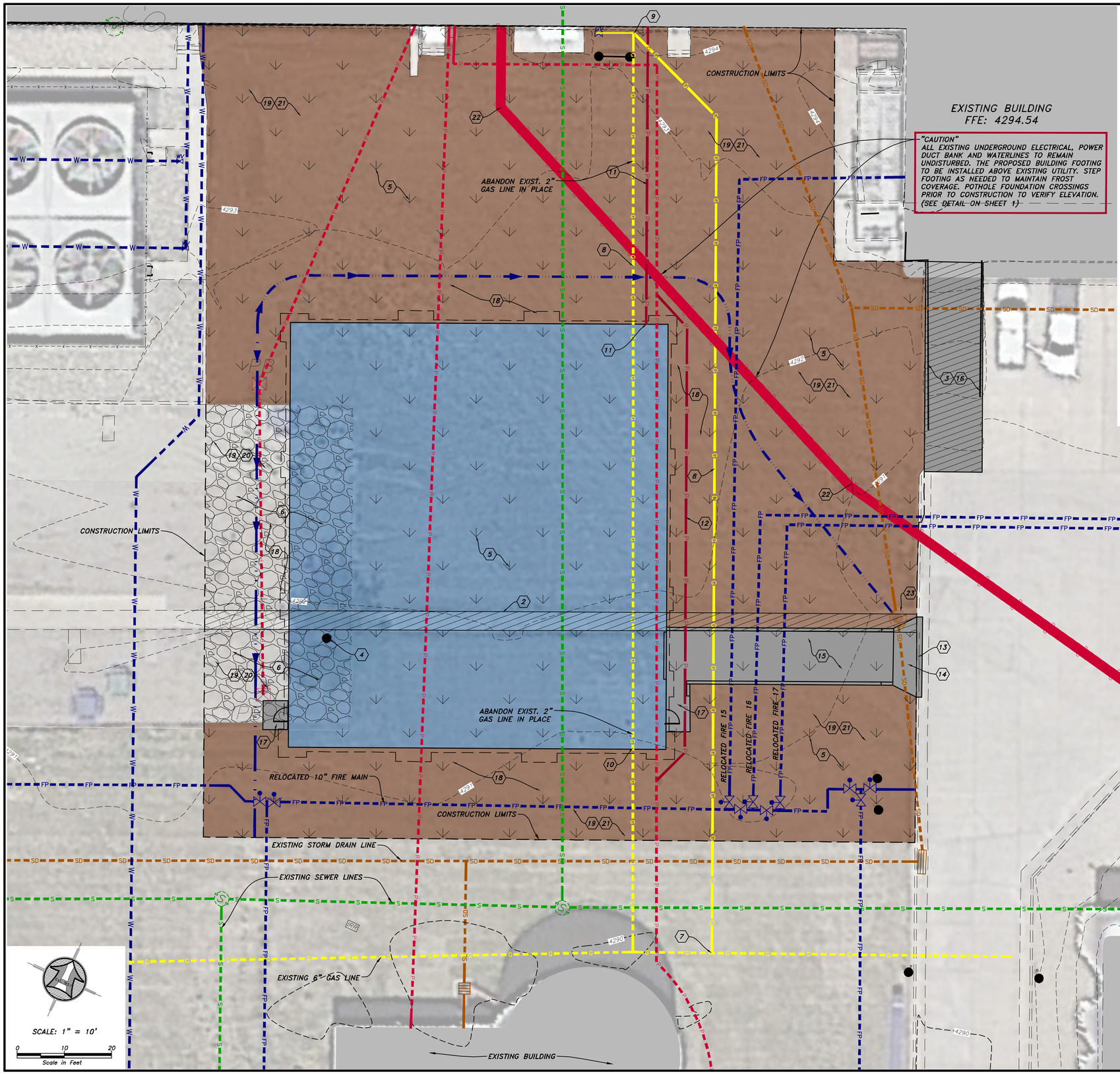

KEY NOTES – SITE IMPROVEMENTS

1. MOBILIZATION & SITE PREPARATION ..... 1 L.S.
2. REMOVE & DISPOSE CONCRETE SIDEWALK FLATWORK ..... 575 S.F.
3. REMOVE & DISPOSE CONCRETE RAMP & HANDRAIL ..... 545 S.F.
4. REMOVE & DISPOSE TREE STUMP ..... 1 EACH
5. EARTHWORK – 6" DEEP REMOVE & DISPOSE SOD & MINIMAL TOPSOIL ..... 420 C.Y.
6. REMOVE & STOCKPILE EXISTING GRAVEL LANDSCAPE ROCK ..... 1973 S.F.
7. CONNECT TO EXIST. GAS LINE WITH 6"x4" TEE ..... 1 EACH
8. INSTALL 4" GAS LINE TO EXISTING BUILDING ..... 204 L.F.
9. CONNECT 4" GAS LINE TO EXIST 2" RISER (ABOVE GROUND) ..... 1 L.S.
10. CONNECT EXIST. 2" GAS SERVICE TO NEW BUILDING WITH REGULATOR & VALVE ... 1 L.S.
11. POWER FEED TO NEW BUILDING (NORMAL & EMERGENCY) ..... 4 EACH
12. RELOCATE POWER LINE AROUND NEW BUILDING ..... 110 L.F.
13. SAW CUT BACK OF CURB & GUTTER FOR DRIVE APPROACH & DISPOSE ..... 17 L.F.
14. INSTALL 8" CONCRETE DRIVE APPROACH WITH 6" COMPACTED ROAD BASE ..... 73 S.F.
15. INSTALL 8" THICK CONCRETE DRIVEWAY WITH 6" COMPACTED ROAD BASE ..... 576 S.F.
16. INSTALL CONCRETE RAMP & HANDRAIL ..... 1 L.S.
17. INSTALL CONCRETE STOOP & SIDEWALK FOR MANDOORS ..... 80 S.F.
18. FINISH GRADING AROUND NEW BUILDING FOR POSITIVE DRAINAGE ..... 3,800 S.F.
19. FINISH GRADING FOR LANDSCAPING AND PLACE LANDSCAPE FABRIC ..... 17,110 S.F.
20. PLACE SALVAGED ROCK LANDSCAPING ON WEST SIDE OF BUILDING ..... 1,175 S.F.
21. FURNISH & INSATALL LANDSCAPING ROCK MULCH (CRUSHED BRICK) ..... 15,935 S.F.
22. EXIST. HIGH VOLTAGE SIGN TO REMAIN OR BE REINSTALLED ..... 2 EACH
23. REPLACE EXISTING SOLID SDMH COVER WITH GRATED COVER ..... 1 EACH
24. COMPACTION TESTING ..... 1 L.S.

No.	Date	By	Revision
1.	11/04/24	MBJ	REVIEW COMMENTS – ADD STAMP & SIGNATURE

PROFESSIONAL ENGINEER
No. 166832
JAMES B. FLINT
STATE OF UTAH
REGISTERED

HANSEN & ASSOCIATES, INC.
Consulting Engineers and Land Surveyors
538 North Main Street, Brigham, Utah 84302
Visit us at www.hales.net
WEBER COUNTY Ogden (801) 399-4905
(435) 723-3491 Logan (435) 752-8272
Celebrating 80 Years of Business

Drawn By: MBJ Date: 11/04/24
Designed By:
Checked By:
Approved By:
Scale: 1" = 10'
Drawing File: 24-5-9 V23.DWG
JOB NUMBER: 24-5-9

KEYNOTE SITE & UTILITY PLAN FOR

KCC STORES WAREHOUSE

2150 N. Rulon White Blvd.
Farr West, Weber County, Utah

Sheet
C-102

No.	Date	By	Revision
1.	11/04/24	MBJ	REVIEW COMMENTS – ADD STAMP & SIGNATURE

PROFESSIONAL ENGINEER
REGISTERED
JAMES B. FLINT
No. 166633
STATE OF UTAH

HANSEN & ASSOCIATES, INC.
Consulting Engineers and Land Surveyors
538 North Main Street, Brigham, Utah 84302
Visit us at www.hales.net
WEBER COUNTY Ogden (801) 399-4905 Logan (435) 752-8272
(435) 723-3491
Celebrating 60 Years of Business

Drawn By: MBJ Date: 11/04/24
Designed By:
Checked By:
Approved By:
Scale: 1" = 10'
Drawing File: 24-5-9 V23.DWG
JOB NUMBER: 24-5-9

SITE DEMOLITION PLAN FOR

KCC STORES WAREHOUSE

2150 N. Rulon White Blvd.
Farr West, Weber County, Utah

Sheet
C-103

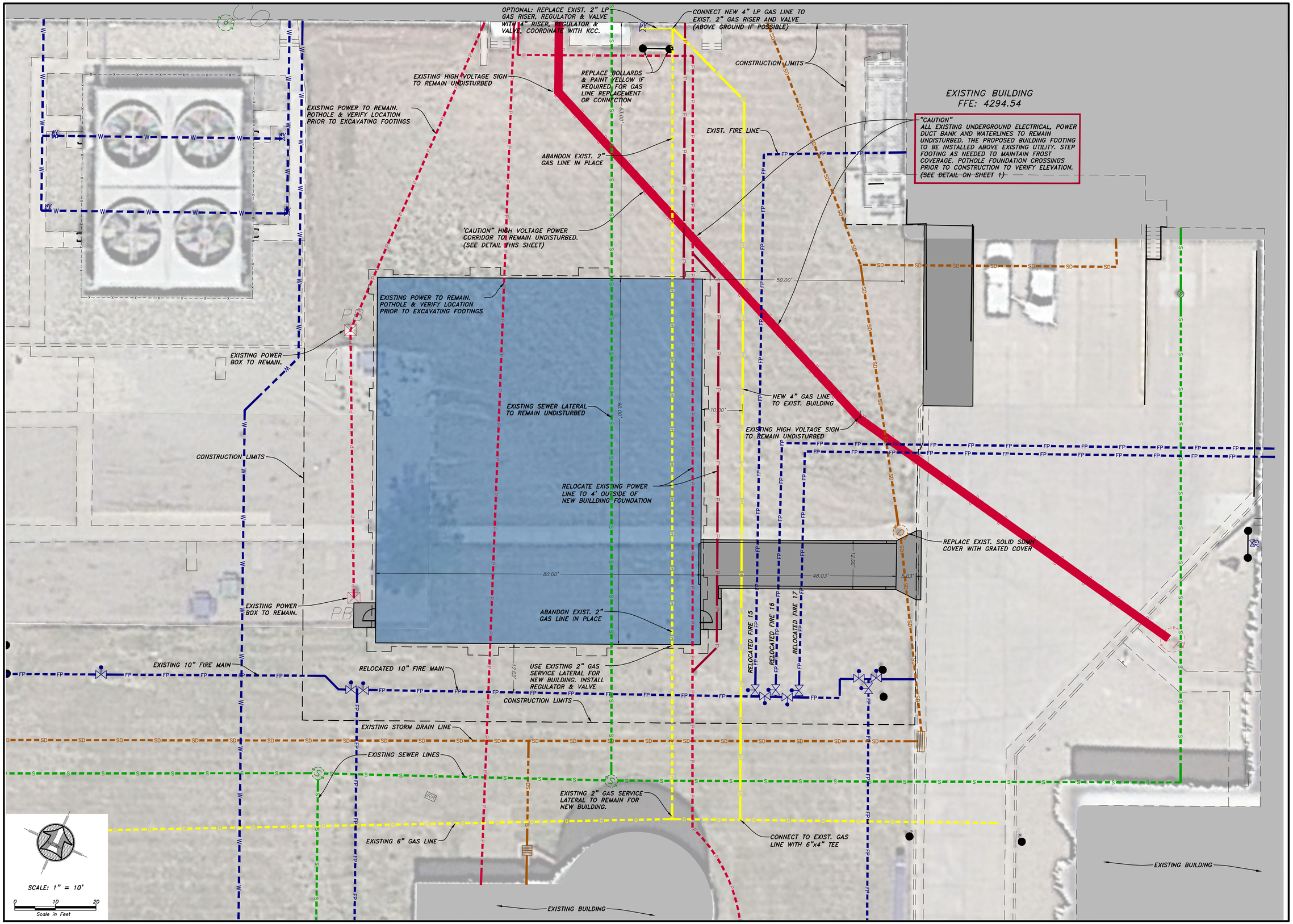

No.	Date	By	Revision
1.	11/04/24	MBJ	REVIEW COMMENTS – ADD STAMP & SIGNATURE

PROFESSIONAL ENGINEER
JAMES B. FLINT
Number 166832
STATE OF UTAH
REGISTERED

HANSEN & ASSOCIATES, INC.
Consulting Engineers and Land Surveyors
538 North Main Street, Brigham, Utah 84302
Visit us at www.hales.net
WEBER COUNTY Ogden (801) 399-4905 Logan (435) 752-8272
(435) 723-3491
Celebrating 60 Years of Business

Drawn By: MBJ Date: 11/04/24
Designed By:
Checked By:
Approved By:
Scale: 1" = 10'
Drawing File: 24-5-9 V23.DWG
JOB NUMBER: 24-5-9

UTILITY PLAN FOR

KCC STORES WAREHOUSE

2150 N. Rulon White Blvd.
Farr West, Weber County, Utah

Sheet
C-104

EXISTING BUILDING

FINISH SURFACE WITH LANDSCAPE FABRIC & ROCK MULCH (CRUSHED BRICK)

FINISH GRADING AROUND NEW BUILDING FOR POSITIVE DRAINAGE

FL: 4292.10 | 0.85% | FL: 4291.78 | 0.85% | FL: 4291.44

FG: 4292.33 | FG: 4292.33 | FG: 4292.33

FL: 4292.23 | FL: 4291.31

50.00'

0.5% | 2.0% | 1.0%

FL: 4291.04

REMOVE & REPLACE EXISTING RAMP AND HADNDRAILS

FINISH GRADING AROUND NEW BUILDING FOR POSITIVE DRAINAGE

PROPOSED BUILDING
FFE: 4293.00

90.00'

EXISTING END OF TBC
ELEV.: 4290.78

FINISH SURFACE WITH LANDSCAPE FABRIC & ROCK MULCH (CRUSHED BRICK)

FINISH SURFACE WITH LANDSCAPE FABRIC AND STOCKPILED GRAVEL TO MATCH LANDSCAPING AREA TO THE WEST

8" CONC. CURB (SEE DETAIL THIS SHEET)

(RIM: 4290.74)
TC: 4290.64
TBC: 4291.44
TC: 4290.77

TC: 4291.90 | TC: 4291.81 | TC: 4291.77

TBC: 4293.57
TC: 4292.90

2.0% | 5.25% | 12.00' | 2.0%

(TBC: 4290.65)
(LIP: 4290.38)
SAW-CUT CURB FOR NEW DRIVE APPROACH
(TBC: 4290.10)
(LIP: 4290.33)
(FG: 4290.57)

NEW CONCRETE DRIVEWAY

80.00'

48.03' | 5.35% | 5.03'

TC: 4292.90 | TC: 4290.70

TBC: 4293.57 | TBC: 4291.37

2.0% | TC: 4292.90 | TC: 4290.57

8" CONC. CURB TAPER (30" MIN. TRANSITION)

EXISTING CURB & GUTTER

CONCRETE STOOP

CONCRETE STOOP

FG: 4292.33 | FG: 4292.33 | FG: 4292.33

FINISH GRADING AROUND NEW BUILDING FOR POSITIVE DRAINAGE

FINISH SURFACE WITH LANDSCAPE FABRIC & ROCK MULCH (CRUSHED BRICK)

(EG: 4290.65) | (EG: 4290.79) | (EG: 4290.44) | (EG: 4290.75) | (TBC: 4290.56)

CONSTRUCTION GRADING LIMITS

SCALE: 1" = 10'

0 10 20
Scale in Feet

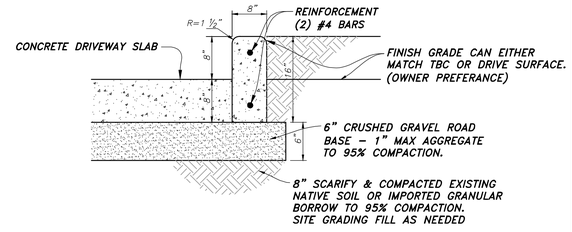

8" CURB SECTION
NOT TO SCALE

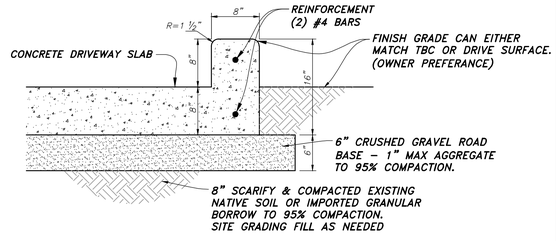

MONOLITIC CONCRETE OPTION
NOT TO SCALE

No.	Date	By	Revision
1.	11/04/24	MBJ	REVIEW COMMENTS - ADD STAMP & SIGNATURE

REGISTERED PROFESSIONAL ENGINEER
No. 2802
JAMES B. FLINT
STATE OF UTAH

HANSEN & ASSOCIATES, INC.
Consulting Engineers and Land Surveyors
538 North Main Street, Brigham, Utah 84302
Visit us at www.haines.net
WEBER COUNTY (801) 394-4905 Logan
(435) 723-1481 (435) 752-8272
Celebrating 60 Years of Business

Drawn By: MBJ Date: 11/08/24
Designed By:
Checked By:
Approved By:
Scale: 1" = 10'
Drawing File: 24-5-9 V23.DWG
JOB NUMBER: 24-5-9

SITE & GRADING PLAN FOR

KCC STORES WAREHOUSE

2150 N. Rulon White Blvd.
Farr West, Weber County, Utah

Sheet
C-105

SWPPP PLAN

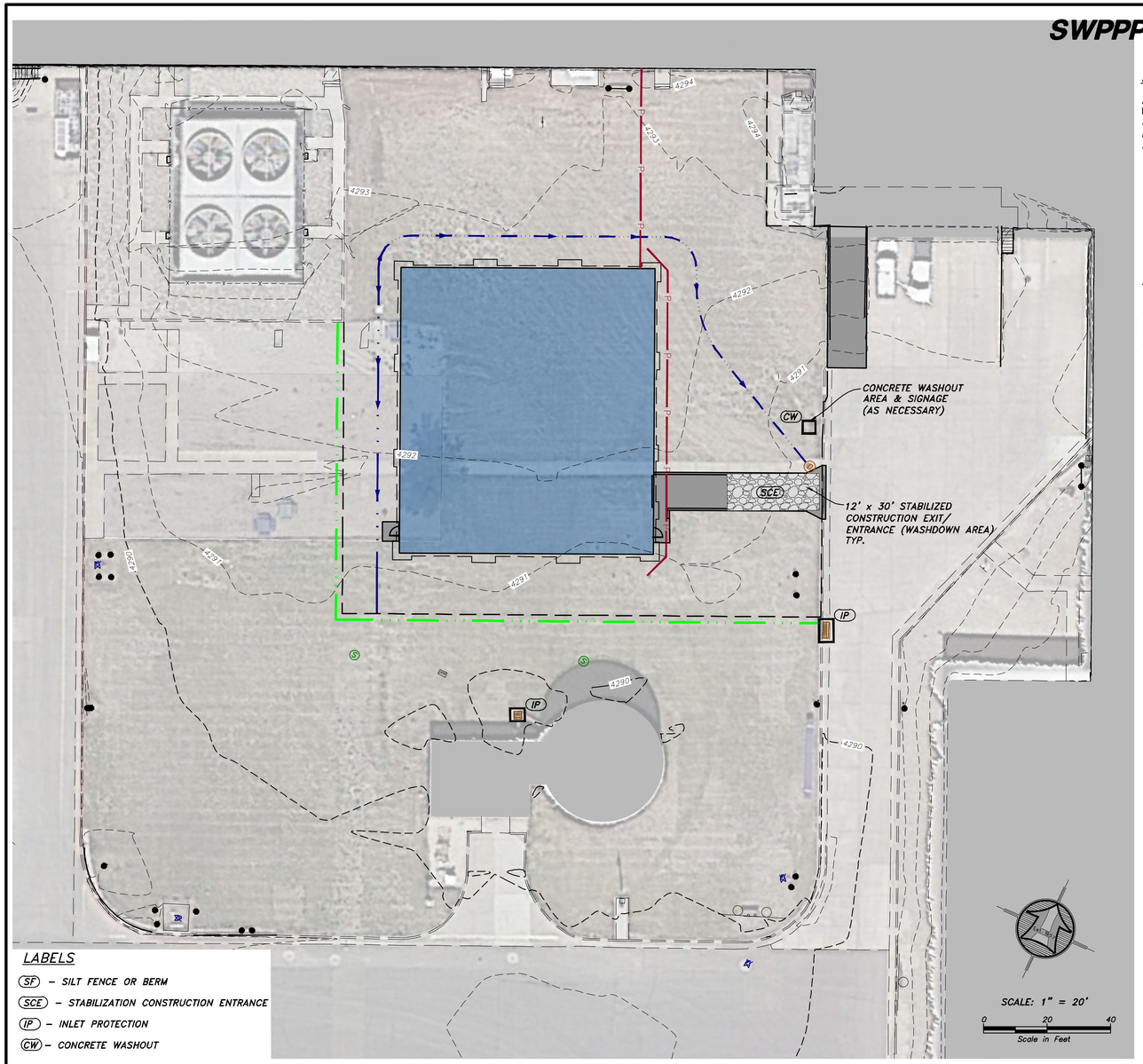

LOCATION:

LOCATION: 2150 N. RULON WHITE BLVD. FARR WEST, WEBER COUNTY, UTAH
SECTION 36, TOWNSHIP 7 NORTH, RANGE 2 WEST, SLB&M
LATITUDE: 41°17'38" N LONGITUDE: 112°00'27" W
APPROXIMATE ELEVATION: 4293'

PROJECT DATA:

TAX ID #: 19-041-0076
PARCEL ACREAGE: 133.48 ACRES

KIMBERLY CLARK CORPORATION
400 GOODYS LN STE 100,
KNOXVILLE TN 379221932

OVERVIEW:

THE PROJECT CONSISTS OF THE CONSTRUCTION OF A BUILDING ADDITION AND ADJACENT DRIVE ACCESS IMPROVEMENTS. CONSTRUCTION WILL ALSO CONSIST OF UTILITY CONNECTIONS AND INSTALLATION, STORM DRAIN ROUTING AND SITE GRADING. DRAINAGE FROM ON-SITE ACTIVITY IS TO BE INTERCEPTED BY THE SILT FENCE/BERM AT THE SOUTH BOUNDARY OF THE PROJECT. EXISTING DITCHES ALONG THE EAST AND WEST PROPERTY LINES WILL ALSO ACT AS BARRIERS. CONCRETE WASHOUT AREA IS LOCATED NEAR THE ENTRANCE/EXIT.

MAINTENANCE/RECORD-KEEPING:

STRICT RECORD KEEPING IS IMPERATIVE. THE PROJECT WILL BE STATE-PERMITED BUT PARTICULARLY UNDER THE AUSPICES OF WEBER COUNTY. KEEP INSPECTION REPORTS FORMS/FORMAT AS MANDATED BY WEBER COUNTY. A THOROUGH INSPECTION OF THE SWPPP MUST BE CONDUCTED AT LEAST EVERY 14 DAYS AND AFTER ANY PRECIPITATION OR SNOWMELT THAT CAUSES SURFACE EROSION. MAINTENANCE AND/OR MODIFICATIONS TO EROSION MEASURES MUST BE COMPLETED IN A TIMELY MANNER, BUT IN NO CASE MORE THAN 7 CALENDAR DAYS AFTER THE INSPECTION. THE ENFORCEMENT AGENCY IS WEBER COUNTY, WHO ADMINISTERS AND ENFORCES STORMWATER POLLUTION PREVENTION PLANS LOCALLY. STORMWATER MANAGEMENT ASPECTS AND PROCEDURES MAY BE MODIFIED BY PERMITTEE (AND/OR OFFICIAL REPRESENTATIVE) UPON OBTAINING WEBER COUNTY APPROVAL.

SWPPP PHASING - ORDER OF WORK:

PHASE 1: CONSTRUCTION OF STABILIZED CONSTRUCTION ENTRANCE, CONCRETE WASHOUT AREA AND SIGNAGE, SILT FENCES & BERMS, AND INLET PROTECTION.

PHASE 2: MAINTAIN STABILIZED CONSTRUCTION ENTRANCE, CONCRETE WASHOUT AREA, SILT FENCES & BERMS, AND WATTLES DURING CONSTRUCTION AND SITE IMPROVEMENTS.

PHASE 3: UPON ASPHALTING, REMOVE CONSTRUCTION ENTRANCE, WATTLES, INLET PROTECTION, AND TEMPORARY SILT FENCES & BERMS.

CONCRETE WASHOUT AREA

NOT TO SCALE

CONCRETE WASHOUT AREA NOTES:

INSTALLATION & MAINTENANCE PER SERVICE AGREEMENT.

NOTE: ADDING SOLVENTS, FLOCCULENTS, OR ACID TO THE WASHWATER IS PROHIBITED.

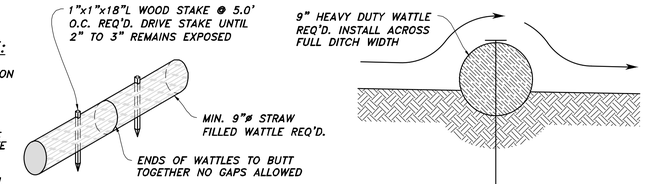

TYPICAL WATTLE/FILTER SOCK

NOT TO SCALE

LABELS

- (SF) - SILT FENCE OR BERM
- (SCE) - STABILIZATION CONSTRUCTION ENTRANCE
- (IP) - INLET PROTECTION
- (CW) - CONCRETE WASHOUT

QUANTITIES

SILT FENCE/BERM - 250 LF

STABILIZED CONSTRUCTION ENTRANCE - 1

INLET PROTECTION - 2

CONCRETE WASHOUT - 1

L E G E N D

- PROPERTY BOUNDARY LINE
- SF — SF SILT FENCE OR BERM REQ'D
- TRACKING PAD
- CONCRETE WASHOUT AREA & SIGNAGE
- INLET PROTECTION

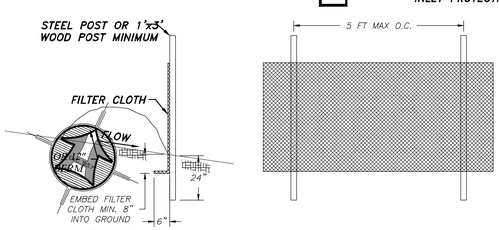

SCALE: 1" = 10'

0 10 20
Scale in Feet

SILT FENCE DETAIL

NOT TO SCALE

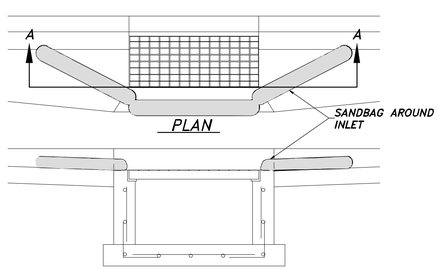

CURB INLET PROTECTION DETAIL

NOT TO SCALE

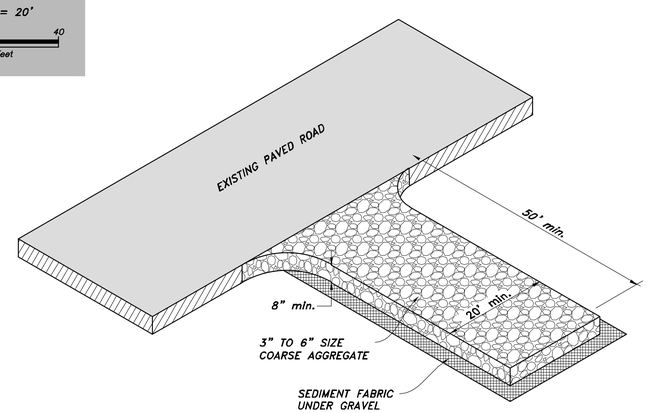

STABILIZED CONSTRUCTION ENTRANCE

NOT TO SCALE

STABILIZED CONSTRUCTION ENTRANCE NOTES:

INSTALLATION/APPLICATION CRITERIA:
1. CLEAR AND GRUB AREA AND GRADE TO PROVIDE MAXIMUM SLOPE OF 2%.

2. COMPACT SUBGRADE AND PLACE FILTER FABRIC IF DESIRED (RECOMMENDED FOR ENTRANCES TO REMAIN FOR MORE THAN 3 MONTHS)

3. PLACE COARSE AGGREGATE, 3" TO 6" IN SIZE, TO A MINIMUM DEPTH OF 8".

LIMITATIONS:
1. REQUIRES PERIODIC TOP DRESSING WITH ADDITIONAL STONES.

2. SHOULD BE USED IN CONJUNCTION WITH STREET SWEEPING ON ADJACENT PUBLIC RIGHT-OF-WAY.

MAINTENANCE:
1. INSPECT DAILY FOR LOSS OF GRAVEL OR SEDIMENT BUILDUP.

2. INSPECT ADJACENT ROADWAY FOR SEDIMENT DEPOSIT AND CLEAN BY SWEEPING OR SHOVELING.

3. REPAIR ENTRANCE AND REPLACE GRAVEL AS REQUIRED TO MAINTAIN CONTROL IN GOOD WORKING CONDITION.

4. EXPAND STABILIZED AREA AS REQUIRED TO ACCOMMODATE TRAFFIC AND PREVENT EROSION AT DRIVEWAYS.

No.	Date	By	Revision
1.	11/04/24	MBJ	REVIEW COMMENTS - ADD STAMP & SIGNATURE

PROFESSIONAL ENGINEER REGISTERED JAMES B. FLINT 166632 STATE OF UTAH

HANSEN & ASSOCIATES, INC.
Consulting Engineers and Land Surveyors
538 North Main Street, Brigham, Utah 84302 (435) 752-8272
Visit us at www.hales.net
WEBER COUNTY (801) 399-4905 Ogden
(435) 723-3481 Logan
Celebrating 60 Years of Business

Drawn By: MBJ Date: 11/04/24
Designed By:
Checked By:
Approved By:
Scale: 1" = 10'
Drawing File: 24-5-9 V23.DWG
JOB NUMBER: 24-5-9

EROSION CONTROL PLAN FOR

KCC STORES WAREHOUSE

2150 N. Rulon White Blvd.
Farr West, Weber County, Utah

Sheet
C-106

STRUCTURAL NOTES :

A. GENERAL

1. THE STRUCTURAL NOTES ARE INTENDED TO COMPLEMENT THE PROJECT SPECIFICATIONS WHICH ARE PART OF THE CONSTRUCTION DOCUMENTS. SPECIFIC NOTES AND DETAILS ON THE DRAWINGS SHALL GOVERN OVER THE STRUCTURAL NOTES AND TYPICAL DETAILS.
2. THESE DRAWINGS (AND, WHERE APPLICABLE, ACCOMPANYING WRITTEN SPECIFICATIONS) ARE THE ONLY CONTRACT DOCUMENTS PROVIDED BY ARW ENGINEERS FOR THE PROJECT REPRESENTED HEREIN. NOTHING IN ANY DIGITAL MODEL OR DIGITAL FILE RELATED TO THIS PROJECT SHALL BE TAKEN TO SUPERSEDE ANY INFORMATION SHOWN IN THESE DRAWINGS (INCLUDING, BUT NOT LIMITED TO, DIMENSIONS, SIZES, ETC).
3. THE ARCHITECTURAL DRAWINGS ARE THE PRIME CONTRACT DRAWINGS. THE STRUCTURAL DRAWINGS ARE SUPPLEMENTARY TO AND MUST BE USED IN CONJUNCTION WITH THE ARCHITECTURAL DRAWINGS AND OTHER CONSULTANTS DRAWINGS. ALL OMISSIONS OR CONFLICTS BETWEEN THE VARIOUS ELEMENTS OF THE WORKING DRAWINGS AND/OR SPECIFICATIONS SHALL BE BROUGHT TO THE ATTENTION OF THE ARCHITECT AND STRUCTURAL ENGINEER BEFORE PROCEEDING WITH ANY WORK INVOLVED. IN CASE OF CONFLICT, FOLLOW THE MOST STRINGENT REQUIREMENT AS DIRECTED BY THE ARCHITECT AT NO ADDITIONAL COST TO THE OWNER.
4. SEE SPECIFICATIONS FOR REQUIRED SUBMITTALS. SUBMITTALS SHALL BE MADE IN A TIMELY MANNER AS INDICATED IN SPECIFICATIONS. REVIEW OF SUBMITTALS BY ARW ENGINEERS IS FOR GENERAL COMPLIANCE ONLY AND IS NOT INTENDED AS APPROVAL. CONTRACTOR IS RESPONSIBLE FOR VERIFYING ALL SIZES, DIMENSIONS, AND ELEVATIONS ON SUBMITTALS AS RELATED TO DESIGN DOCUMENTS. PREPARATION OF SHOP DRAWINGS FOR STRUCTURAL ELEMENTS WILL REQUIRE INFORMATION (I.E. DIMENSIONS, ETC.) FOUND IN THE ARCHITECTURAL, STRUCTURAL, AND OTHER CONSULTANTS DRAWINGS.
5. THE CONTRACTOR SHALL VERIFY ALL CONDITIONS AND DIMENSIONS AT THE SITE. IF ACTUAL CONDITIONS DIFFER FROM THOSE SHOWN ON CONTRACT DOCUMENTS, CONTRACTOR SHALL NOTIFY ARCHITECT PRIOR TO FABRICATION OR CONSTRUCTION OF ANY AFFECTED ELEMENTS.
6. THE CONTRACTOR SHALL COORDINATE AND VERIFY ALL LOCATIONS AND SIZES OF MECHANICAL EQUIPMENT OR OTHER EQUIPMENT BEFORE FABRICATING AND ERECTING STRUCTURAL ELEMENTS. SIZES AND LOCATIONS THAT DIFFER FROM THOSE SHOWN ON THE CONTRACT DOCUMENTS SHALL BE REPORTED TO THE ARCHITECT.
7. THE CONTRACTOR SHALL SUBMIT A WRITTEN REQUEST TO THE ARCHITECT FOR ARCHITECT AND/OR ENGINEER APPROVAL BEFORE PROCEEDING WITH ANY CHANGES, MODIFICATIONS, OR SUBSTITUTIONS.
8. OBSERVATION VISITS TO THE SITE BY ARW ENGINEERS FIELD REPRESENTATIVES SHALL NEITHER BE CONSTRUED AS INSPECTION NOR APPROVAL OF CONSTRUCTION.
9. DURING AND AFTER CONSTRUCTION, BUILDER AND/OR OWNER SHALL KEEP LOADS ON STRUCTURE WITHIN THE LIMITS OF DESIGN LOADS AS NOTED IN THESE DOCUMENTS.
10. TYPICAL OR SIMILAR DETAILS AND SECTIONS SHALL APPLY WHERE SPECIFIC DETAILS ARE NOT SHOWN. TYPICAL OR SIMILAR DETAILS REFER TO THE CONDITION ADDRESSED AND ARE NOT NECESSARILY DETAILS LABELED "TYPICAL" OR "SIMILAR" IN THE PLANS AND DOCUMENTS.
11. DRAWINGS AND DETAILS HAVE BEEN PREPARED WITH THE INTENT TO VISUALLY REPRESENT INFORMATION PROVIDED IN SCALED FORM; HOWEVER CONTRACTOR/SUPPLIERS SHOULD NOT SCALE PLANS OR DETAILS FOR DIMENSIONAL INFORMATION.
12. IT IS THE RESPONSIBILITY OF THE CONTRACTOR TO DESIGN AND INSTALL ADEQUATE TEMPORARY SHORING AND BRACING FOR ALL STRUCTURAL ELEMENTS UNTIL THE ENTIRE STRUCTURAL SYSTEM IS COMPLETED.
13. ENGINEER SHALL NOT BE RESPONSIBLE FOR ACTIVITIES UNDER CONTROL OF THE CONTRACTOR SUCH AS CONSTRUCTION SITE SAFETY, MEANS, METHODS AND SEQUENCING OF CONSTRUCTION. ENGINEER SHALL NOT BE RESPONSIBLE FOR FABRICATION, ERECTION AND CONSTRUCTION REQUIREMENTS AS PRESCRIBED BY OSHA OR OTHER REGULATORY AGENCIES REGARDLESS OF INDICATIONS IN THESE DOCUMENTS.
14. NOTICE OF COPYRIGHT: THESE STRUCTURAL DRAWINGS ARE HEREBY COPYRIGHTED BY ARW ENGINEERS, ALL RIGHTS RESERVED. THESE DOCUMENTS DEFINE A STRUCTURE AND ARE INSTRUMENTS OF SERVICE, FOR ONE USE ONLY. REPRODUCTION AND DISTRIBUTION OF THESE DRAWINGS IS ONLY ALLOWED AS REQUIRED FOR REGULATORY AGENCIES AND FOR CONVEYANCE OF INFORMATION TO PARTIES INVOLVED IN THE CONSTRUCTION OF THIS PROJECT. THESE DOCUMENTS SHALL NOT BE REPRODUCED OR COPIED, IN PART OR WHOLE BY ANY PARTY FOR USE IN PREPARATION OF SHOP DRAWINGS OR OTHER SUBMITTALS.
15. WHERE THE WORD "SHALL" OCCURS IN THESE DRAWINGS AND ANY ACCOMPANYING SPECIFICATIONS, IT IS CONSIDERED A MANDATORY OBLIGATION AND SYNONYMOUS WITH THE PHRASE "HAS DUTY TO".

B. STATEMENT OF SPECIAL INSPECTIONS AND SPECIAL INSPECTIONS

1. THE DESIGNATED SEISMIC/WIND SYSTEMS AND SEISMIC/WIND-FORCE-RESISTING SYSTEMS THAT ARE SUBJECT TO SPECIAL INSPECTIONS IN ACCORDANCE WITH IBC SECTION 1705.12 AND 1705.13 ARE IDENTIFIED ON THESE DOCUMENTS WITH A CIRCLE "L". ALL OTHER ITEMS REQUIRING SPECIAL INSPECTION ARE IDENTIFIED IN THE SPECIAL INSPECTION SCHEDULE ON SHEET S011 AND S012.
2. SPECIAL INSPECTIONS AND TESTING ARE TO BE PROVIDED AS REQUIRED BY IBC SECTIONS 1704 THROUGH 1705 AND OTHER APPLICABLE SECTIONS OF THE IBC. THE TYPE AND FREQUENCY OF TESTING AND SPECIAL INSPECTIONS SHALL BE AS NOTED IN THE SPECIAL INSPECTION SCHEDULE, JOB SPECIFICATIONS, AND ACCORDANCE WITH IBC SECTION 110 AND CHAPTER 17. CONTRACTOR SHALL COORDINATE AND COOPERATE WITH REQUIRED INSPECTIONS.
3. ALL TESTING AND SPECIAL INSPECTION SHALL BE PROVIDED BY A QUALIFIED INDEPENDENT SPECIAL INSPECTION AGENCY IN ACCORDANCE WITH IBC 1704 AND AS OUTLINED IN THE JOB SPECIFICATIONS. REPORTS OF FINDINGS OR DISCREPANCIES SHALL BE NOTED AND FORWARDED TO THE CONTRACTOR, ARCHITECT, ENGINEERS, AND BUILDING OFFICIAL IN A TIMELY MANNER.
4. STRUCTURAL OBSERVATION VISITS SHALL BE PERFORMED BY A REPRESENTATIVE FROM ARW ENGINEERS IN ACCORDANCE WITH THE CONTRACT AS NEEDED TO OBSERVE THE CONSTRUCTION OF CRITICAL BUILDING ELEMENTS (I.E. FOOTINGS, BRACED FRAMES, MOMENT FRAMES, DRAG STRUTS AND THEIR CONNECTIONS, COLLECTORS, AND ROOF AND FLOOR DIAPHRAGMS). STRUCTURAL OBSERVATION REPORTS FOR EACH VISIT SHALL BE SENT DIRECTLY TO THE ARCHITECT FOR DISTRIBUTION TO THE CONTRACTOR AND BUILDING OFFICIAL. STRUCTURAL OBSERVATION VISITS SHALL NEITHER BE CONSTRUED AS SPECIAL INSPECTION NOR APPROVAL OF COMPLETED CONSTRUCTION.
5. IN ACCORDANCE WITH IBC 1704.4, THE CONTRACTOR SHALL SUBMIT A WRITTEN CONTRACTOR'S STATEMENT OF RESPONSIBILITY TO THE BUILDING OFFICIAL AND OWNER. THE STATEMENT SHALL BE SUBMITTED PRIOR TO THE CONSTRUCTION OF ANY SEISMIC/WIND-FORCE-RESISTING SYSTEM, DESIGNATED SEISMIC/WIND SYSTEM, OR COMPONENT IDENTIFIED IN THESE DOCUMENTS WITH A CIRCLE "L".

C. BASIS OF DESIGN

1. GOVERNING BUILDING CODE : INTERNATIONAL BUILDING CODE (IBC) 2021
   RISK CATEGORY : D
2. LOADING ON FOUNDATIONS AS PROVIDED BY THE PRE ENGINEERED BUILDING MANUFACTURER

D. FOUNDATION

1. GENERAL
   a. DESIGN SOIL PRESSURE : 2500 PSF
   b. SOILS REPORT BY : GSH GEOTECHNICAL
      REPORT # : 0115-117-21
      DATED : FEBRUARY 14, 2022
   c. SOIL PREPARATION UNDER FOUNDATIONS AND SLABS-ON-GRADE SHALL BE IN ACCORDANCE WITH THE SOILS REPORT.
   d. TOP OF FOOTING ELEVATIONS SHOWN ON THE FOOTING AND FOUNDATION PLAN ARE BASED ON PRELIMINARY GRADING INFORMATION AND SHALL BE VERIFIED PRIOR TO CONSTRUCTION. STEPS WHERE SHOWN ARE AT APPROXIMATE LOCATIONS. ACTUAL STEP LOCATIONS SHALL BE AT THE CONTRACTOR'S DISCRETION BASED UPON FIELD CONDITIONS. ALL EXTERIOR FOUNDATIONS SHALL BEAR A MINIMUM OF 30 INCHES BELOW LOWEST ADJACENT FINAL GRADE.
   e. ALL WALLS (EXCEPT CANTILEVERED RETAINING WALLS) SHALL BE ADEQUATELY BRACED AGAINST LATERAL MOVEMENT PRIOR TO BACKFILLING. DESIGN AND ERECTION OF BRACING/SHORING SHALL BE THE RESPONSIBILITY OF THE GENERAL CONTRACTOR. BRACING SHALL REMAIN IN PLACE UNTIL SUPPORTING STRUCTURAL ELEMENTS ARE IN PLACE AND HAVE ATTAINED FULL STRENGTH.
   f. UNLESS NOTED OTHERWISE, ALL FOOTINGS AT COLUMNS SHALL BE CENTERED BELOW COLUMNS.
   g. UNLESS NOTED OTHERWISE, ALL FOOTINGS SHALL HAVE VERTICAL FACES FORMED WITH STANDARD FORMING MATERIALS (WOOD, METAL, ETC.). WITH PRIOR APPROVAL OF ARCHITECT AND ENGINEER, CONCRETE FOR FOOTINGS CAN BE PLACED IN EXCAVATED SOIL "FORMS" PROVIDED THAT THE DIMENSIONS ARE INCREASED 3" ON ALL SIDE.
   h. UNLESS NOTED AND DETAILED OTHERWISE, NO PIPES, DUCTS, CONDUITS, NON-STRUCTURAL ITEMS, ETC. SHALL BE BURIED BELOW OR EMBEDDED IN FOOTINGS / FOUNDATION WALLS. SEE TYPICAL DETAIL FOR CONDITIONS WHERE THESE ITEMS CROSS OR RUN PARALLEL TO FOOTINGS / FOUNDATION WALLS.

E. CONCRETE

1. ALL CONCRETE MIX DESIGNS SHALL COMPLY WITH THE PROJECT SPECIFICATIONS AND THE REQUIREMENTS LISTED BELOW :

ELEMENT	EXPOSURE CATEGORY F S W C	f'c, AT 28 DAYS (PSI)	MAX. W/C RATIO	AIR CONTENT %	MAX. AGGREGATE SIZE
Interior Slabs on Grade	F0 S0 W0 C0	3000	---	---	---
Interior Slabs on Metal Deck	F0 S0 W0 C0	3000	---	---	---
FTG / Grade Beams / FDN Walls[a]	F0 S0 W1 C0	3000	---	---	1"
FTG / Grade Beams / FDN Walls[b]	F2 S0 W1 C1	4500	0.45	Note c	1"

NOTES :
   a. ELEMENT IS NOT EXPOSED TO FREEZING AND / OR IS BURIED IN SOIL BELOW THE FROST LINE.
   b. ELEMENT IS EXPOSED TO FREEZING AND / OR IS LOCATED ABOVE THE FROST LINE.
   c. TOTAL AIR CONTENT FOR CONCRETE EXPOSED TO CYCLES OF FREEZING AND THAWING SHALL BE DETERMINED IN ACCORDANCE WITH THIS SCHEDULE. TOLERANCE ON AIR CONTENT AS DELIVERED SHALL BE +/- 1.5 PERCENT.

NOMINAL MAXIMUM AGGREGATE SIZE, IN.	TARGET AIR CONTENT, PERCENT F1	F2 AND F3
3/8	6	7.5
1/2	5.5	7
3/4	5	6
1	4.5	6
1-1/2	4.5	5.5
2	4	5
3	3.5	4.5

2. WATER USED IN MIXING CONCRETE SHALL CONFORM TO ASTM C1602.
3. NO CONDUIT, PIPES, DUCTS, SLEEVES, ETC. SHALL BE PLACED IN STRUCTURAL CONCRETE UNLESS SPECIFICALLY DETAILED OR APPROVED BY THE STRUCTURAL ENGINEER. NO ALUMINUM PRODUCTS SHALL BE EMBEDDED IN CONCRETE. PENETRATIONS THRU STRUCTURAL CONCRETE ELEMENTS MUST BE APPROVED BY THE ENGINEER AND SHALL BE BUILT INTO THE ELEMENT PRIOR TO CONCRETE PLACEMENT.
4. REFER TO ARCHITECTURAL DRAWINGS FOR MOLDS, GROOVES, ORNAMENTS, ETC. TO BE CAST IN TO CONCRETE, AND FOR EXTENT AND LOCATION OF DEPRESSIONS, CURBS, RAMPS, ETC.
5. UNLESS NOTED OTHERWISE, MINIMUM REINFORCING IN ALL CONCRETE FOUNDATION WALLS SHALL BE AS FOLLOWS:

THICKNESS	TOP & BOTTOM BARS	VERTICAL	HORIZONTAL
6"	(1) #5	#4 AT 18"O.C.	#4 AT 16"O.C.
8"	(2) #5	#4 AT 18"O.C.	#4 AT 12"O.C.
10"	(2) #5	#4 AT 12"O.C.	#5 AT 12"O.C.
12"	(2) #5	#4 AT 18"O.C. EA FACE	#4 AT 16"O.C. EA FACE

6. UNLESS NOTED OTHERWISE, CONCRETE SLABS ON EARTH SHALL BE REINFORCED AS FOLLOWS:
   4" THICK - #3 AT 18"O.C. EACH WAY
   6" THICK - #4 AT 18"O.C. EACH WAY
   8" THICK - #4 AT 12"O.C. EACH WAY
   10" THICK - #4 AT 12" O.C. EACH WAY, TOP & BOTTOM
   REINFORCING SHALL BE CONTINUOUSLY SUPPORTED AT 36"O.C. MAXIMUM SPACING.
7. UNLESS NOTED OTHERWISE, FOR NON-DETAILED OPENINGS IN CONCRETE WALLS LARGER THAN 12" AND SMALLER THAN 24" IN ANY DIRECTION ADD (2) #5 BARS ON ALL SIDES IN ADDITION TO REGULAR WALL REINFORCING AND EXTEND 24" EACH WAY BEYOND OPENING. IF 24" IS NOT AVAILABLE ON EVERY SIDE, NOTIFY STRUCTURAL ENGINEER FOR FURTHER DIRECTION. OPENINGS SHALL HAVE A MINIMUM OF 12" OF CONCRETE ABOVE THE OPENING, TYP.
8. CONSTRUCTION JOINTS NOT SHOWN ON THE PLANS SHALL BE MADE AND LOCATED SO AS TO NOT IMPAIR THE STRENGTH OF THE STRUCTURE AND AS APPROVED BY THE STRUCTURAL ENGINEER. ALL STEEL REINFORCING SHALL BE CONTINUOUS THROUGH COLD JOINTS UNLESS NOTED OTHERWISE. SEE TYPICAL DETAILS FOR COLD/CONSTRUCTION JOINTS FOR SLABS ON GRADE.
9. WHERE NEW CONCRETE IS PLACED AGAINST PREVIOUSLY HARDENED CONCRETE, THE JOINT SHALL BE CLEAN AND FREE OF LAITANCE. IMMEDIATELY BEFORE NEW CONCRETE IS PLACED, CONSTRUCTION JOINTS SHALL BE PREWETTED AND STANDING WATER REMOVED.
10. WHERE GRADE BEAMS, HAIRPINS, OR SLAB REINFORCING IS DOWELED TO THE FOUNDATION WALLS IN PRE-ENGINEERED METAL BUILDINGS, THE GRADE BEAMS, HAIRPINS, OR SLAB REINFORCING SHALL BE INSTALLED AND THE CONCRETE THAT ENCASES THEM SHALL BE PLACED PRIOR TO THE ERECTION OF THE METAL BUILDING.

F. ANCHOR BOLTS/EMBEDDED BOLTS

1. ALL ANCHOR BOLTS SHALL HAVE ASTM A-563 HEAVY HEX NUT AND ASTM F-436 WASHERS AT STANDARD OR OVERSIZED HOLES PER AISC SPECIFICATION TABLE J3.3. WHERE HOLE SIZES DO NOT COMPLY WITH THE LIMITATIONS FOR OVERSIZED HOLES THE STRUCTURAL ENGINEER SHALL BE NOTIFIED TO DETERMINE STEEL PLATE WASHER REQUIREMENTS. ANCHOR BOLTS SHALL COMPLY WITH THE FOLLOWING :
   a. AT BRACED FRAMES & MOMENT RESISTING FRAMES - ASTM F1554 GRADE 105 HEADED BOLTS.(ASTM F1554 THREADED ROD OF SAME GRADE MAY BE USED WITH DOUBLE NUT AND WASHER.)
   b. AT ALL OTHER ANCHOR BOLTS (UNLESS NOTED OTHERWISE) - ASTM F1554 GRADE 36 HEADED BOLTS. (ASTM A36 THREADED ROD MAY BE USED WITH DOUBLE NUT AND WASHER.)
2. SEE TYPICAL ANCHOR BOLT DETAIL FOR DEFINITIONS OF EMBEDMENT LENGTH, ETC.
3. FURNISH TEMPLATES AND OTHER DEVICES AS NECESSARY FOR PRESETTING ALL BOLTS PRIOR TO PLACING CONCRETE AND/OR GROUT.
4. IF THREADED RODS ARE USED AS PERMITTED ABOVE, THEY SHALL BE CLEAR OF SOIL AND DIRT.
5. WHERE REQUIRED FOR ERECTION, HOLES LARGER THAN OVERSIZED MAY BE PERMITTED WITH THE USE OF STEEL PLATE WASHERS AT THE DISCRETION OF THE STRUCTURAL ENGINEER.

G. REINFORCING STEEL

1. REINFORCING BAR STRENGTH REQUIREMENTS:
   a. ALL REINFORCING BARS EXCEPT AS INDICATED IN NOTE b, SHALL CONFORM TO ASTM STANDARD A-615 GRADE 60 AND ALL WELDED WIRE FABRIC SHALL CONFORM TO ASTM STANDARD A-1064 AND SHALL BE SUPPLIED IN FLAT SHEETS. ADEQUATELY TIE AND SUPPORT ALL REINFORCING STEEL AS SPECIFIED BY ACI 117, TO MAINTAIN EXACT REQUIRED POSITION.
2. ALL REINFORCING STEEL SHALL BE TIED IN PLACE AND ADEQUATELY SUPPORTED PRIOR TO PLACING CONCRETE. WET STABBING OF ANY REINFORCING STEEL IS NOT PERMITTED, UNLESS SPECIFICALLY DETAILED OTHERWISE OR APPROVED BY THE ENGINEER.
3. ALL FIELD BENT DOWELS SHALL BE GRADE 40 WITH SPACING INDICATED REDUCED BY 1/3.
4. UNLESS NOTED OTHERWISE, REINFORCEMENT SHALL HAVE THE FOLLOWING CONCRETE COVERAGE :
   a. CAST AGAINST AND PERMANENTLY EXPOSED TO EARTH ..... 3"
   b. EXPOSED TO EARTH OR WEATHER :
      1. #6 & LARGER ..... 2"
      2. #5 & SMALLER .....1-1/2"
   c. NOT EXPOSED TO WEATHER OR EARTH :
      1. SLABS, WALLS, JOISTS, #11 & SMALLER ..... 3/4"
      2. BEAMS, COLUMNS: MAIN REINFORCING OR TIES ..... 1-1/2"
   d. SLAB ON GRADE :
      1. PLACE REINFORCING AT CENTER OF SLAB UNLESS INDICATED OTHERWISE.
5. EXCEPT WHERE NOTED ON PLANS OR DETAILS CONTINUOUS REINFORCEMENT SHALL BE SPLICED AT POINTS OF MINIMUM STRESS BY LAPPING PER THE REBAR LAP SCHEDULE.
6. REINFORCING STEEL MAY BE SPLICED WITH MECHANICAL COUPLERS THAT HAVE A TENSION CAPACITY OF AT LEAST 125% OF THE STRENGTH OF THE BAR. MECHANICAL COUPLERS SHALL BE A POSITIVE CONNECTING TYPE COUPLER, AND SHALL BE INSTALLED IN ACCORDANCE WITH AN APPROVED ICC RESEARCH REPORT. WHERE THESE ARE USED, SPLICES ON ADJACENT BARS SHALL BE STAGGERED AT LEAST 24 INCHES ALONG THE LENGTH OF THE BARS.
7. ALL VERTICAL REINFORCING IN STRUCTURAL ELEMENTS ABOVE SHALL BE SPLICED WITH MATCHING DOWELS EMBEDDED WITHIN THE FOOTINGS OR STRUCTURE BELOW. SPLICE LENGTHS SHALL COMPLY WITH REBAR LAP SCHEDULE. DOWELS INTO FOOTINGS SHALL TERMINATE WITH A STANDARD HOOK, AND SHALL EXTEND TO WITHIN 4" OF THE BOTTOM OF THE FOOTING, BUT NEED NOT EXTEND MORE THAN 20" INTO FOOTING.
8. DO NOT WELD REINFORCING.
9. REINFORCING BARS, TIES, AND TENDONS SHALL BE SUPPORTED BY NYLON CONES, PLASTIC-COATED TIE-WIRES, OR PLASTIC-COATED CHAIRS. REINFORCING IN FOOTINGS IS PERMITTED TO BE SUPPORTED ON CONCRETE DOBIES.
10. UNLESS NOTED OTHERWISE, HOOKS, STIRRUPS, TIES, AND OTHER BENDS IN REINFORCING STEEL SHALL MEET THE STANDARDS SET FORTH IN ACI 318/318R-19. UNLESS OTHERWISE PERMITTED BY THE ENGINEER, ALL REINFORCEMENT SHALL BE BENT COLD. REINFORCEMENT PARTIALLY EMBEDDED IN CONCRETE SHALL NOT BE FIELD BENT, EXCEPT AS SHOWN ON THESE DRAWINGS OR OTHERWISE PERMITTED BY THE ENGINEER.
11. UNLESS SPECIFICALLY NOTED AND/OR DETAILED IN THE STRUCTURAL DRAWINGS CONDUIT SHALL NOT BE IN CONTACT WITH REINFORCING STEEL.

(STRUCTURAL NOTES CONTINUED ON SHEET S002)

LEGEND OF SYMBOLS AND ABBREVIATIONS

AB	=	ANCHOR BOLT
ABV	=	ABOVE
ARCH	=	ARCHITECT
BLW	=	BELOW
BN	=	BOUNDARY NAILING
BS	=	BOUNDARY SCREW
BRB	=	BUCKLING RESTRAINED BRACE
BRBF	=	BUCKLING RESTRAINED BRACE FRAME
CJP	=	COMPLETE JOINT PENETRATION
CL	=	CENTERLINE
CMU	=	CONCRETE MASONRY UNIT
COL	=	COLUMN
CONC	=	CONCRETE
CP	=	CONCRETE PIER
DC	=	DEMAND CRITICAL
DIA / Ø	=	DIAMETER
DBA	=	DEFORMED BAR ANCHOR
DBE	=	DECK BEARING ELEVATION
ELEV	=	ELEVATION
EN	=	EDGE NAILING
EOD	=	EDGE OF DECK
FDN	=	FOUNDATION
FTG	=	FOOTING
FFE	=	FINISHED FLOOR ELEVATION
GB	=	CONCRETE GRADE BEAM
HSA	=	HEADED STUD ANCHOR
JBE	=	JOIST BEARING ELEVATION
KB	=	KICKER BRACE
MAX	=	MAXIMUM
MB	=	MASONRY BEAM
MC	=	MASONRY COLUMN
MECH	=	MECHANICAL
MEZZ	=	MEZZANINE
MIN	=	MINIMUM
MJ	=	MASONRY JAMB
MW	=	MASONRY WALL
NS, FS	=	NEAR SIDE, FAR SIDE
OAE	=	OR APPROVED EQUAL
OPP	=	OPPOSITE
PAF	=	POWDER ACTUATED FASTENER
PL	=	PLATE
REINF	=	REINFORCING
REQ'D	=	REQUIRED
SIM	=	SIMILAR
SSH	=	STEEL STUD HEADER
SSJ	=	STEEL STUD JAMB
SSS	=	STEEL STUD SILL
SSW	=	STEEL STUD WALL
TOB	=	TOP OF BEAM ELEVATION
TOC	=	TOP OF CONCRETE SLAB
TOF	=	TOP OF FOOTING
TOG	=	TOP OF GIRDER ELEVATION
TOM	=	TOP OF MASONRY
TOS	=	TOP OF STEEL ELEVATION
TYP	=	TYPICAL
UNO	=	UNLESS NOTED OTHERWISE

FOOTING MARK
TOP OF FOOTING ELEVATION
SECTION MARK
SHEET NUMBER
TOP OF FOUNDATION WALL OR COLUMN PIER ELEVATION
SHEAR WALL - SEE SCHEDULE
MIN. LENGTH OF SHEAR WALL
S — S FOOTING STEP
MASONRY WALL
CONCRETE WALL
DEPRESS FDN./WALL AND POUR FLOOR SLAB OVER AT MASONRY FOUNDATION WALL
DEPRESS FDN./WALL AND POUR FLOOR SLAB OVER AT CONCRETE FOUNDATION WALL
MASONRY BEAM
CONCRETE BEAM
HD POST "A" — HD - SIMPSON HOLDOWN SIZE; POST - SIZE OF END POST CONNECTED TO HOLDOWN; "A" - PLAN CONFIGURATION AT HOLDOWN AT FOUNDATION
ELEVATION
L — FRAMING ANGLE SEE TYPICAL DETAIL
C — FRAMING CHANNEL SEE TYPICAL DETAIL
L — ITEMS, DETAILS, & SYSTEMS WHICH ARE PART OF THE LATERAL FORCE RESISTING SYSTEM.
BRACED FRAME
MOMENT RESISTING CONNECTIONS - SEE DETAIL
MOMENT RESISTING CANTILEVER CONNECTIONS - SEE DETAIL
KB — KICKER BRACE
COLUMN SIZE
PIER MARK (PIER ELEV.)

Structural Sheet Index

ARW ENGINEERS
EA SOLUTIONS
324 S. State Street, Suite 444
Salt Lake City, UT 84111
www.easolutions.us
385-549-8600

Rev.	Description	Date	Appr.

Designed by: JDH
Drawn by: LEE
Reviewed by: Checker
Submitted by: Approver
Submitted: 10.04.2024
File:
Scale: As indicated
Project Number: EA24022TP
REV:

KCC STORES
PEMB BLDG.
2010 N. RULON WHITE BLVD.
FARR WEST, UT 84404
PERMIT SUBMITTAL

STRUCTURAL NOTES

SHEET NUMBER
S001

I. NON-STRUCTURAL DELEGATED DESIGNS AND DEFERRED SUBMITTALS

1. NON-STRUCTURAL DELEGATED DESIGNS AND SUBSEQUENT DEFERRED SUBMITTALS ARE FOR ITEMS NOT INCLUDED IN THE STRUCTURAL DELEGATED DESIGN SECTION. THESE ARE ITEMS THAT ARE NOT CRITICAL TO THE OVERALL PERFORMANCE OF THE STRUCTURAL SYSTEM BUT THAT IMPART LOADS AND FORCES TO THE STRUCTURAL SYSTEM.
2. NON-STRUCTURAL DEFERRED SUBMITTALS SHALL BEAR THE STAMP AND SIGNATURE OF THE DESIGN PROFESSIONAL RESPONSIBLE FOR THE DESIGN.
3. ARW ENGINEERS WILL REVIEW NON-STRUCTURAL DEFERRED SUBMITTALS TO VERIFY DESIGN CRITERIA IS COMPLIANT WITH THE APPROVED CONSTRUCTION DOCUMENTS.
4. IF THE STRUCTURAL DRAWINGS INCLUDE LOADS TO ACCOMMODATE NON-STRUCTURAL ELEMENTS, THE CONTRACTOR SHALL SUBMIT DOCUMENTATION INDICATING THAT THE NON-STRUCTURAL ELEMENTS COMPLY WITH THE LOADING CRITERIA PROVIDED HEREIN. SUCH DOCUMENTATION SHALL BEAR THE STAMP AND SIGNATURE OF THE DESIGN PROFESSIONAL RESPONSIBLE FOR THE DESIGN.
5. WHEN THE NON-STRUCTURAL DEFERRED SUBMITTAL INDICATES THAT THE ELEMENT WILL IMPART FORCES IN EXCESS OF LOADS THAT ARE INDICATED ON THE STRUCTURAL DRAWINGS, THE CONTRACTOR SHALL SUBMIT A DETAILED GRAPHICAL REPRESENTATION OF THOSE DESIGN LOADS, INCLUDING MAGNITUDE, AND LOCATION. THE GRAPHIC SHALL BE ACCOMPANIED BY DOCUMENTATION INDICATING THAT THE NON-STRUCTURAL ELEMENT DESIGN COMPLIES WITH THE LOADING CRITERIA PROVIDED HEREIN. THE LETTER SHALL BEAR THE STAMP AND SIGNATURE OF THE DESIGN PROFESSIONAL RESPONSIBLE FOR THE DESIGN.
6. NON-STRUCTURAL DELEGATED DESIGN ITEMS REQUIRING DEFERRED SUBMITTALS SHALL INCLUDE, BUT ARE NOT LIMITED TO :
   a. SEISMIC BRACING OF ALL ARCHITECTURAL, MECHANICAL, PLUMBING, AND ELECTRICAL ITEMS WHERE REQUIRED BY THE MOST RECENT VERSION OF ASCE 7 AND THE PROJECT CONTRACT DOCUMENTS.

J. PRE-ENGINEERED BUILDING NOTES

1. PRE-ENGINEERED METAL BUILDING, FRAME, ROOF, WALL PANELS, ANCHOR BOLTS, ETC. SHALL BE DESIGNED AND DETAILED BY THE MANUFACTURER. SPECIFICATIONS, CALCULATIONS, REACTIONS AT FOUNDATIONS, AND PLANS SHALL BE SEALED BY A PROFESSIONAL ENGINEER LICENSED IN THE STATE IN WHICH THE PROJECT OCCURS AND SUBMITTED TO THE ARCHITECT FOR REVIEW PRIOR TO FABRICATION.
2. GOVERNING BUILDING CODE: INTERNATIONAL BUILDING CODE (IBC) 2021
3. WIND DESIGN
   a. BASIC WIND SPEED (3 SECOND GUST): 103 MPH
   b. WIND IMPORTANCE FACTOR, I_w: 1.0,
   c. BUILDING CATEGORY: II
   d. WIND EXPOSURE: C
   e. COMPONENT AND CLADDING DESIGN WIND PRESSURE SHALL BE AS REQUIRED BY THE IBC 2021.
4. SEISMIC DESIGN
   a. SEISMIC IMPORTANCE FACTOR, I_E: 1.0
   b. BUILDING CATEGORY II
   c. SITE CLASS: D - DEFAULT
   d. SPECTRAL RESPONSE COEFFICIENTS: S_{DS} = 1.18
   e. SEISMIC DESIGN CATEGORY: D
   f. LATERAL SUPPORT OF BUILDING TO BE DESIGNED BY BUILDING MANUFACTURER MAY BE BRACING, FRAMES, ETC.
5. ARW ENGINEERS EXPRESSLY DISCLAIMS RESPONSIBILITY FOR THE ENGINEERING OF THE PRE-ENGINEERED METAL BUILDING.

EA SOLUTIONS
324 S. State Street, Suite 444
Salt Lake City, UT 84111
www.easolutions.us
385-549-8600

ARW ENGINEERS

Rev.	Description	Date	Appr.
1	ADD 01	11/11/24	

Designed by: Designer
Drawn by: Author
Reviewed by: Checker
Submitted by: Approver
Submitted: 10.04.2024
REV: 1
File:
Scale: 12" = 1'-0"
Project Number: EA24022TP

KCC STORES
PEMB BLDG.
2010 N. RULON WHITE BLVD.
FARR WEST, UT 84404
PERMIT SUBMITTAL

STRUCTURAL NOTES

SHEET NUMBER
S002

CONCRETE PIER SCHEDULE

MARK	SIZE (B x L)	B1	B2	L1	L2	VERT REINF. (NOTE 2)	TIES	COMMENTS
CP-1	20" x 16"	---	---	---	---	(10) #6	#3 @ 8"	(3 TIES IN TOP 5")

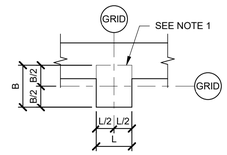

PIER AT WALL

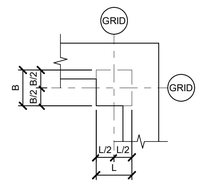

PIER AT CORNER

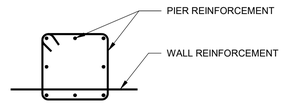

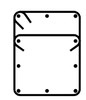

10 VERTS

NOTES :

1. WHERE TOP OF PIER IS LOWER THAN TOP OF FOUNDATION WALL, BLOCK OUT FOUNDATION WALL AS REQUIRED FOR BASE PLATE CLEARANCE.
2. VERTICAL PIER REINFORCING TO BE UNIFORMLY SPACED AROUND PERIMETER, 2" CLEAR FROM OUTSIDE OF PIER.
3. TOP OF PIER ELEVATION IS 8" BELOW FINISHED FLOOR ELEVATION EXCEPT WHERE [PIER (ELEV.)] OTHERWISE NOTED ON PLANS. SEE LEGEND FOR ADDITIONAL INFORMATION.
4. WHERE PIER IS NOT SYMMETRICAL ABOUT GRIDLINES, REFER TO PLAN FOR BRACED FRAME LAYOUT AND RESPECTIVE DIRECTION OF OFFSET DIMENSIONS, WHERE PROVIDED.
5. ALL PIERS AT FOUNDATION WALLS ARE TO BE CONSTRUCTED MONOLITHICALLY WITH WALLS UNLESS NOTED OTHERWISE.
6. PIER REINFORCEMENT SHALL BE FABRICATED WITH SUFFICIENT SIZE SO THAT WALL REINFORCEMENT PASSES THROUGH PIER REINFORCEMENT.
7. WHERE SPECIFIC 'B' AND 'L' DIMENSIONS ARE NOT PROVIDED, EDGE OF PIER EXTENDS TO EXTERIOR EDGE OF FOUNDATION WALL.
8. SEE 7/S201 FOR ADDITIONAL PIER REINF. AT ALL PIERS.

1

CONCRETE FOUNDATION WALL SCHEDULE

MARK	THICKNESS "T"	VERTICAL REINFORCING						HORIZONTAL REINFORCING				
		INSIDE FACE		CENTER OF WALL		OUTSIDE FACE		EACH FACE		CENTER OF WALL		TOP & BOTTOM BARS
		SIZE	SPACING	SIZE	SPACING	SIZE	SPACING	SIZE	SPACING	SIZE	SPACING	
CW-1	8"	---	---	#4	18"o.c.	---	---	---	---	#4	12"o.c.	(2) #5
CW-2	---	---	---	---	---	---	---	---	---	---	---	---
CW-3	---	---	---	---	---	---	---	---	---	---	---	---
CW-4	---	---	---	---	---	---	---	---	---	---	---	---
CW-5	---	---	---	---	---	---	---	---	---	---	---	---
CW-6	---	---	---	---	---	---	---	---	---	---	---	---
CW-7	---	---	---	---	---	---	---	---	---	---	---	---
CW-8	---	---	---	---	---	---	---	---	---	---	---	---
CW-9	---	---	---	---	---	---	---	---	---	---	---	---

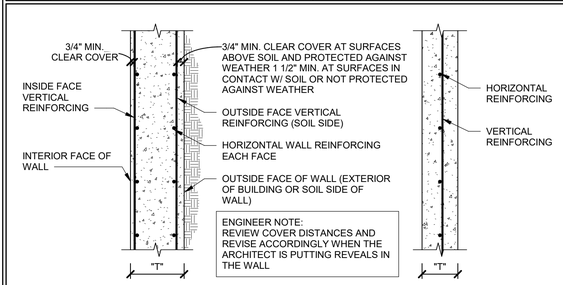

ENGINEER NOTE:
REVIEW COVER DISTANCES AND REVISE ACCORDINGLY WHEN THE ARCHITECT IS PUTTING REVEALS IN THE WALL

TWO LAYERS OF REINFORCING

ONE LAYER OF REINFORCING

NOTE:
1. FOR ANY CONCRETE FOUNDATION WALLS NOT SPECIFICALLY CALLED OUT IN PLANS, USE CW-1.
2. VERTICAL REINFORCING TO BE AT CENTERLINE OF WALL UNLESS OTHERWISE NOTED.
3. SEE STRUCTURAL NOTES FOR ADDITIONAL INFORMATION.
4. EXTEND HORIZONTAL REINFORCING AROUND CORNERS OR ADD CORNER BARS AND LAP EACH WAY PER TYPICAL DETAIL.

FOOTING SCHEDULE

MARK	WIDTH	LENGTH	THICK	LENGTHWISE REINF.		CROSSWISE REINF.			REMARKS
				NO.	SIZE	NO.	SIZE	SPA.	
FC2	2'-0"	CONT.	12"	(2)	#5	--	--	--	
F3	3'-0"	3'-0"	12"	(3)	#5	(3)	#5	--	REINFORCE TOP & BOTTOM
F3.5	3'-6"	3'-6"	12"	(3)	#5	(3)	#5	--	REINFORCE TOP & BOTTOM
F4	4'-0"	4'-0"	12"	(4)	#5	(4)	#5	--	REINFORCE TOP & BOTTOM
F4.5	4'-6"	4'-6"	12"	(4)	#5	(4)	#5	--	REINFORCE TOP & BOTTOM
F5	5'-0"	5'-0"	12"	(5)	#5	(5)	#5	--	REINFORCE TOP & BOTTOM
F5.5	5'-6"	5'-6"	12"	(6)	#5	(6)	#5	--	REINFORCE TOP & BOTTOM
F6	6'-0"	6'-0"	14"	(6)	#5	(6)	#5	--	REINFORCE TOP & BOTTOM
F6.5	6'-6"	6'-6"	14"	(7)	#6	(7)	#6	--	REINFORCE TOP & BOTTOM
F7	7'-0"	7'-0"	16"	(7)	#6	(7)	#6	--	REINFORCE TOP & BOTTOM
F7.5	7'-6"	7'-6"	16"	(8)	#6	(8)	#6	--	REINFORCE TOP & BOTTOM
F8	8'-0"	8'-0"	18"	(8)	#6	(8)	#6	--	REINFORCE TOP & BOTTOM
F8.5	8'-6"	8'-6"	18"	(9)	#7	(9)	#7	--	REINFORCE TOP & BOTTOM
F9	9'-0"	9'-0"	20"	(9)	#7	(9)	#7	--	REINFORCE TOP & BOTTOM
F9.5	9'-6"	9'-6"	20"	(9)	#7	(9)	#7	--	REINFORCE TOP & BOTTOM
F10	10'-0"	10'-0"	22"	(10)	#7	(10)	#7	--	REINFORCE TOP & BOTTOM
F10.5	10'-6"	10'-6"	22"	(11)	#7	(11)	#7	--	REINFORCE TOP & BOTTOM
F11	11'-0"	11'-0"	24"	(11)	#7	(11)	#7	--	REINFORCE TOP & BOTTOM
F11.5	11'-6"	11'-6"	26"	(11)	#8	(11)	#8	--	REINFORCE TOP & BOTTOM
F12	12'-0"	12'-0"	26"	(12)	#8	(12)	#8	--	REINFORCE TOP & BOTTOM

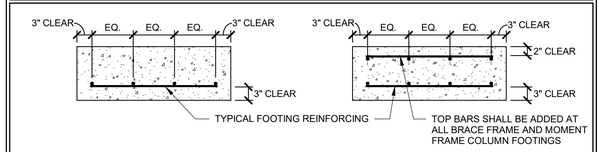

TYP. FOOTING SECTION

TYP. FOOTING SECTION W/ TOP & BOTTOM REINF.

STANDARD HOOK & BEND SCHEDULE

TYPE OF STANDARD HOOK	BAR SIZE	MIN. INSIDE BEND DIA. FOR STIRRUPS, TIES, AND HOOPS, in	STRAIGHT EXTENSION ℓ_{ext} FOR STIRRUPS, TIES, AND HOOPS in.	MIN. INSIDE BEND DIA. FOR OTHER BARS, in	STRAIGHT EXTENSION ℓ_{ext} FOR OTHER BARS in.	TYPE OF STANDARD HOOK
90° HOOK	#3 - #5	$4d_b$	GREATER OF $6d_b$ AND 3"	$6d_b$	$12d_b$	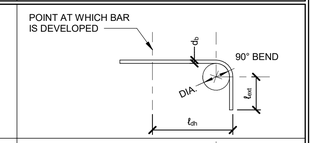
	#6 - #8	$6d_b$	$12d_b$			
	#9 - #11	N/A	N/A	$8d_b$		
	#14 - #18	N/A	N/A	$10d_b$		
135° HOOK	#3 - #5	$4d_b$	GREATER OF $6d_b$ AND 3"	N/A	N/A	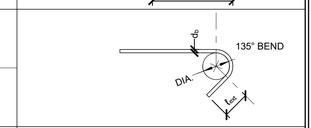
	#6 - #8	$6d_b$	GREATER OF $6d_b$ AND 3"	N/A	N/A	
180° HOOK	#3 - #5	$4d_b$	GREATER OF $4d_b$ AND 2.5"	$6d_b$	GREATER OF $4d_b$ AND 2.5"	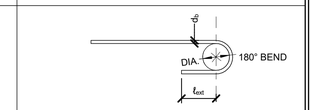
	#6 - #8	$6d_b$				
	#9 - #11	N/A	N/A	$8d_b$		
	#14 - #18	N/A	N/A	$10d_b$		

EA SOLUTIONS
324 S. State Street, Suite 444
Salt Lake City, UT 84111
www.easolutions.us
385-549-8800

ARW ENGINEERS

Rev.	Description	Date	Appr.
1	ADD 01	11/11/24	

REV: 1

Designed by: JDH
Drawn by: LEE
Reviewed by: Checker
Submitted by: Approver
Submitted: 10.04.2024
File:
Scale: 3/4" = 1'-0"
Project Number: EA24022TP

KCC STORES
PEMB BLDG.
2010 N. RULON WHITE BLVD.
FARR WEST, UT 84404
PERMIT SUBMITTAL

SCHEDULES

SHEET NUMBER
S010

2021 IBC CONCRETE REBAR LAP SPLICE SCHEDULE (60KSI REBAR)

FOR CONCRETE APPLICATIONS (ACI 318 - 19)

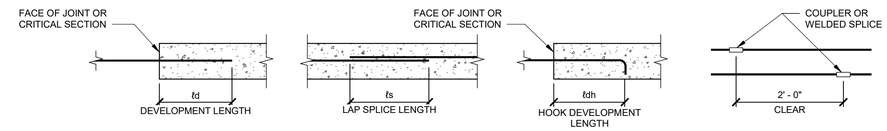

BAR LOCATION	CONCRETE		CONCRETE REINFORCING & SPLICE LENGTHS (IN)																												COMMENTS
			BAR SIZE																												
	TYPE	STRENGTH	#3			#4			#5			#6			#7			#8			#9			#10			#11				
			ℓd	ℓs	ℓdh	ℓd	ℓs	ℓdh	ℓd	ℓs	ℓdh	ℓd	ℓs	ℓdh	ℓd	ℓs	ℓdh	ℓd	ℓs	ℓdh	ℓd	ℓs	ℓdh	ℓd	ℓs	ℓdh	ℓd	ℓs	ℓdh		
VERT. WALL BARS, FILL ON METAL DECK	NWC	3000 PSI	17	22	6	22	29	6	28	36	8	33	43	11	48	62	14	55	72	16	62	81	20	70	91	23	78	101	27		
HORIZ. WALL BARS, FOOTING TOP BARS	NWC	3000 PSI	22	29	6	29	38	6	36	47	8	43	56	11	63	82	14	72	94	16	81	105	20	91	118	23	101	131	27		
BEAM BOTTOM BARS, COLUMN BARS	NWC	3000 PSI	17	22	6	22	29	10	28	36	13	33	43	17	48	62	21	55	72	26	62	81	31	70	91	37	78	101	43		
FOOTING BOTTOM BARS, SLAB ON GRADE	NWC	3000 PSI	12	16	6	14	18	6	17	22	8	20	26	11	29	38	14	33	43	16	38	49	20	42	55	23	46	61	27		
SLAB TOP BARS[5] BEAM TOP BARS	NWC	3000 PSI	22	29	6	29	38	10	36	47	13	43	56	17	63	82	21	72	94	26	81	105	31	91	118	37	101	131	43		

BAR LOCATION	CONCRETE		CONCRETE REINFORCING & SPLICE LENGTHS (IN)																												COMMENTS
			BAR SIZE																												
	TYPE	STRENGTH	#3			#4			#5			#6			#7			#8			#9			#10			#11				
			ℓd	ℓs	ℓdh	ℓd	ℓs	ℓdh	ℓd	ℓs	ℓdh	ℓd	ℓs	ℓdh	ℓd	ℓs	ℓdh	ℓd	ℓs	ℓdh	ℓd	ℓs	ℓdh	ℓd	ℓs	ℓdh	ℓd	ℓs	ℓdh		
VERT. WALL BARS, FILL ON METAL DECK	NWC	4500 PSI	14	18	6	18	23	6	23	30	8	27	35	10	40	52	12	45	59	15	51	66	18	57	74	21	64	83	25		
HORIZ. WALL BARS, FOOTING TOP BARS	NWC	4500 PSI	18	23	6	24	31	6	30	39	8	35	46	10	51	66	12	59	77	15	66	86	18	74	96	21	82	107	25		
BEAM BOTTOM BARS, COLUMN BARS	NWC	4500 PSI	14	18	6	18	23	9	23	30	12	27	35	16	40	52	20	45	59	24	51	66	29	57	74	34	64	83	40		
FOOTING BOTTOM BARS, SLAB ON GRADE	NWC	4500 PSI	12	16	6	12	16	6	13	17	8	16	21	10	23	30	12	26	34	15	29	38	18	33	43	21	36	47	25		
SLAB TOP BARS[5] BEAM TOP BARS	NWC	4500 PSI	18	23	6	24	31	9	30	39	12	35	46	16	51	66	20	59	77	24	66	86	29	74	96	34	82	107	40		

NOTES :
1. MECHANICAL COUPLERS MAY BE USED IN LIEU OF LAP SPLICES SHOWN. SEE STRUCTURAL NOTES FOR MINIMUM COUPLER CAPACITY. WHERE MECHANICAL COUPLERS ARE USED, STAGGER ADJACENT SPLICES A MINIMUM OF 24" AS INDICATED ABOVE.
2. LENGTHS INDICATED IN THIS SCHEDULE SHALL BE INCREASED BY 50% FOR STRAIGHT BAR DEVELOPMENT AND 20% FOR HOOKED BARS WHERE EPOXY COATING IS USED.
3. WHEN SPLICING BARS OF DIFFERENT SIZES, USE LAP SPLICE LENGTH OF LARGER BARS UNO.
4. SPLICE BARS LARGER THAN #11 USING MECHANICAL COUPLERS.
5. SLAB TOP BARS ONLY FOR SLABS 12" OR GREATER IN THICKNESS.

STATE OF UTAH No. 9207877-2202 Jaret D. Havens 10/04/24 PROFESSIONAL ENGINEER

ARW ENGINEERS
1165 SOUTH 400 WEST
PROVO, UTAH 84601
T: 801.762.9300
WWW.ARWENGINEERS.COM

EA SOLUTIONS
324 S. State Street, Suite 444
Salt Lake City, UT 84111
www.easolutions.us
385-549-8600

Rev.	Description	Date	Appr.

Designed by: Designer
Drawn by: Author
Reviewed by: Checker
Submitted by: Approver
Submitted: 10.04.2024
File:
Scale: 3/4" = 1'-0"
Project Number: EA24022TP
REV:

KCC STORES
PEMB BLDG.
2010 N. RULON WHITE BLVD.
FARR WEST, UT 84404
PERMIT SUBMITTAL

SCHEDULES

SHEET NUMBER
S011

SPECIAL INSPECTION SCHEDULE [1, 2]

ESTABLISHED PER 2018 IBC SECTION 110 AND CHAPTER 17

ITEM	CONTINUOUS[3]	PERIODIC[3]	REFERENCE	COMMENTS
PRE-FAB CONSTRUCTION (IBC 1704.2)			REFERENCE NOTES P1 & P2	P1. SPECIAL INSPECTION IS NOT REQUIRED WHERE THE WORK IS DONE ON THE PREMISES OF A FABRICATOR REGISTERED AND APPROVED TO PERFORM SUCH WORK WITHOUT SPECIAL INSPECTION, PROVIDED THE FABRICATOR COMPLIES WITH IBC. P2. INSPECTION FOR PREFABRICATED CONSTRUCTION SHALL BE THE SAME AS IF THE MATERIAL USED IN THE CONSTRUCTION TOOK PLACE ON SITE. SPECIAL INSPECTION WILL NOT BE REQUIRED DURING PREFABRICATION IF THE APPROVED AGENCY CERTIFIES THE CONSTRUCTION AND FURNISHES EVIDENCE OF COMPLIANCE. (SEE NOTE 2).
CONCRETE CONSTRUCTION (IBC 1705.3)			SEE IBC TABLE 1705.3 - REF. NOTE C1	C 1. SPECIAL INSPECTION IS NOT REQUIRED FOR CONC. ISOLATED SPREAD FOOTINGS, CONTINUOUS FOOTINGS, NON-STRUCTURAL SLABS, FOUNDATION WALLS, PATIOS, DRIVEWAYS, AND SIDEWALKS PROVIDED THE REQUIREMENTS OF IBC 1705.3 ARE MET. C 2. PERIODIC SPECIAL INSPECTION IS ALLOWED FOR VERIFICATION OF THE WELDABILITY OF REINFORCING STEEL RESISTING FLEXURAL AND AXIAL FORCES IN INTERMEDIATE AND SPECIAL MOMENT FRAMES, BOUNDARY ELEMENTS OF SPECIAL REINFORCED CONCRETE SHEAR WALLS, AND SHEAR REINFORCEMENT. PERIODIC SPECIAL INSPECTION IS ALLOWED FOR WELDING OF OTHER ASTM A 706 REINFORCING STEEL NOT INCLUDED IN THE CONTINUOUS SPECIAL INSPECTION REQUIREMENTS NOTED ABOVE. C 3. PERFORM AIR, SLUMP AND TEMP. TESTS WHEN CONCRETE SAMPLES ARE CAST. C 4. PERIODIC SPECIAL INSPECTION IS REQUIRED FOR VERIFICATION OF IN-SITU CONCRETE STRENGTH FOR POST-TENSIONED CONCRETE PRIOR TO TENSIONING TENDONS OR REMOVING SHORING OR FORMS. C 5. EPOXY AND EXPANSION ANCHORS INTO MASONRY OR CONCRETE MAY BE USED ONLY WHEN APPROVED BY ARCHITECT. AND/OR ENGINEER USING AN APPROVED PRODUCT WITH CURRENT PUBLISHED ICC RESEARCH REPORT NUMBERS. COORDINATE CONTINUOUS/PERIODIC SPECIAL INSPECTION REQUIREMENTS WITH ICC REPORT.
REINFORCING STEEL PLACEMENT		●		
WELDING OF REINFORCING STEEL	●	●	REFERENCE NOTE C2	
EMBEDDED BOLTS & PLATES	●			
VERIFYING REQUIRED DESIGN MIX		●		
CONCRETE PLACEMENT / SAMPLING	●		REFERENCE NOTE C3	
CURING TEMPERATURE / TECHNIQUES		●		
VERIFICATION OF IN-SITU STRENGTH		●	REFERENCE NOTE C4	
EPOXY / EXPANSION ANCHOR PLACEMENT	●	●	REFERENCE NOTE C5	
SOILS (IBC 1705.6)			REFERENCE NOTE F1	F 1. SPECIAL INSPECTION OF SOILS SHALL REFERENCE THE APPROVED SOILS REPORT TO DETERMINE COMPLIANCE. F 2. WHERE SOILS REPORT IS NOT PROVIDED SPECIAL INSPECTIONS ARE REQUIRED TO VERIFY THAT THE IN-PLACE DRY DENSITY OF THE COMPACTED FILL IS NOT LESS THAN 90 PERCENT OF THE MAXIMUM DRY DENSITY AT OPTIMUM MOISTURE CONTENT DETERMINED IN ACCORDANCE WITH ASTM D 1557.
VERIFY ADEQUATE MATERIALS BELOW FOOTINGS		●	REFERENCE NOTE F1	
EXCAVATIONS EXTEND TO PROPER DEPTH AND REACH PROPER MATERIAL		●	REFERENCE NOTE F2	
CLASSIFY & TEST CONTROLLED FILL MATERIALS		●	REFERENCE NOTE F2	
PERFORM MATERIALS, DENSITIES, AND LIFT THICKNESSES DURING PLACEMENT AND COMPACTION OF CONTROLLED FILL.	●		REFERENCE NOTE F1	
PROPERLY PREPARED SITE AND SUB-GRADE PRIOR TO FILL.		●	REFERENCE NOTE F1	

GENERAL SPECIAL INSPECTION NOTES :

1. THE ITEMS MARKED WITH A "●" IN THE SPECIAL INSPECTION SCHEDULE SHALL BE INSPECTED IN ACCORDANCE WITH IBC CHAPTER 17 BY A CERTIFIED SPECIAL INSPECTOR FROM AN ESTABLISHED TESTING AGENCY. FOR MATERIAL SAMPLING AND TESTING REQUIREMENTS, REFER TO THE MATERIAL SAMPLING AND TESTING SECTION, THE PROJECT SPECIFICATIONS, AND THE SPECIFIC GENERAL NOTES SECTIONS. THE TESTING AGENCY SHALL SEND COPIES OF ALL STRUCTURAL TESTING AND INSPECTION REPORTS DIRECTLY TO THE ARCHITECT, ENGINEER, CONTRACTOR, AND BUILDING OFFICIAL. ANY ITEMS WHICH FAIL TO COMPLY WITH THE APPROVED CONSTRUCTION DOCUMENTS SHALL IMMEDIATELY BE BROUGHT TO THE ATTENTION OF THE CONTRACTOR FOR CORRECTION. IF DISCREPANCIES ARE NOT CORRECTED, THEY SHALL BE BROUGHT TO THE ATTENTION OF THE BUILDING OFFICIAL, ARCHITECT, AND ENGINEER PRIOR TO COMPLETION OF THAT PHASE OF WORK. SPECIAL INSPECTION TESTING REQUIREMENTS APPLY EQUALLY TO ALL BIDDER DESIGNED COMPONENTS.
2. ANY CONSTRUCTION OR MATERIAL THAT HAS FAILED INSPECTION SHALL BE SUBJECT TO REMOVAL AND REPLACEMENT.
3. CONTINUOUS SPECIAL INSPECTION MEANS THE FULL-TIME OBSERVATION OF WORK REQUIRING SPECIAL INSPECTION BY AN APPROVED SPECIAL INSPECTOR WHO IS PRESENT IN THE AREA WHERE THE WORK IS BEING PERFORMED. PERIODIC SPECIAL INSPECTION MEANS THE PART-TIME OR INTERMITTENT OBSERVATION OF WORK REQUIRING SPECIAL INSPECTION BY AN APPROVED SPECIAL INSPECTOR WHO IS PRESENT IN THE AREA WHERE THE WORK HAS BEEN OR IS BEING PERFORMED AND AT THE COMPLETION OF THE WORK. (IBC SECTION 202)

STATE OF UTAH No. 9768547-2202 Jann D. Havens 10/04/24 PROFESSIONAL ENGINEER

ARW ENGINEERS
1140 W. 400 N. Suite 100 Orem, UT 84057
T: 801.762.8300 www.arwengineers.com

EA SOLUTIONS
324 S. State Street, Suite 444
Salt Lake City, UT 84111
www.easolutions.us
385-549-8600

Rev.	Description	Date	Appr.

Designed by: Designer
Drawn by: Author
Reviewed by: Checker
Submitted by: Approver
Submitted: 10.04.2024
File:
Scale: 3/4" = 1'-0"
Project Number: EA24022TP
REV:

KCC STORES
PEMB BLDG.
2010 N. RULON WHITE BLVD.
FARR WEST, UT 84404
PERMIT SUBMITTAL

SCHEDULES

SHEET NUMBER
S012

FOOTING & FOUNDATION NOTES :

1. SEE SHEET S001 & S002 FOR GENERAL STRUCTURAL NOTES.
2. ALL FOOTINGS SHALL BE PLACED ON SOIL WHICH HAS BEEN PREPARED FOR THE BEARING PRESSURE SHOWN IN THE STRUCTURAL NOTES.
3. VERIFY ALL DIMENSIONS WITH DRAWINGS AND NOTIFY ENGINEER OF ANY DISCREPANCIES FOUND.
4. SOLID GROUT ALL MASONRY COURSES BELOW FINISHED FLOOR OR EXTERIOR GRADE (WHICHEVER IS HIGHER).
5. SEE SHEET S010 FOR FOOTING SCHEDULE.
6. PROVIDE DOWELS IN FOOTINGS / FOUNDATIONS TO MATCH VERTICAL WALL REINFORCING U.N.O.
7. SEE SHEET S201 FOR TYPICAL FOOTING AND FOUNDATION DETAILS.
8. ALL EXTERIOR WALL FOOTINGS TO BEAR A MINIMUM DIMENSION BELOW EXTERIOR GRADE AS NOTED IN GENERAL STRUCTURAL NOTES.
9. FOUNDATION WALLS ARE DESIGNED AND DETAILED FOR THE COMPLETED CONDITION. CONTRACTOR IS RESPONSIBLE FOR MEANS AND METHODS OF CONSTRUCTION. BACKFILLED WALLS SHALL BE ADEQUATELY BRACED DURING CONSTRUCTION AND BACKFILLING TO PRODUCE PLUMB AND TRUE FINISHED WALLS.
10. ALL ANCHORS, HOLDOWNS, ANCHOR BOLTS, DOWELS, EMBEDDED ITEMS, ETC. SHALL BE HELD IN PLACE PRIOR TO AND DURING CONCRETE AND/OR GROUT PLACEMENT.
11. COORDINATE ALL FOOTING DEPTHS (INTERIOR AND EXTERIOR) WITH DRAINS, CONDUITS, ETC. THAT MAY INTERFERE WITH FOOTINGS.
12. ALL CONCRETE PIERS BELOW COLUMNS SHALL BE CP-1 UNLESS NOTED OTHERWISE. SEE THE PIER SCHEDULE ON S010 FOR PIER SIZE AND REINFORCEMENT.
13. ALL FOUNDATION WALLS SHALL BE CW-1 U.N.O. - SEE SCHEDULE ON S010.

CONCRETE SLAB NOTES :

1. SLAB ON GRADE SHALL BE 10" THICK CONCRETE U.N.O. SLAB SHALL BE UNDERLAIN BY FREE DRAINING MATERIAL AS PRESCRIBED IN THE SOILS REPORT.
2. SEE SHEET S201 FOR CONTROL AND CONSTRUCTION JOINT INFORMATION.
3. REINFORCE SLAB WITH #5 AT 12"o.c. EACH WAY TOP AND BOTTOM.
4. — — — INDICATES JOINT LOCATIONS/ BLOCKOUTS - SEE 1/S201
5. THE SLAB ON GRADE IS A STRUCTURAL DIAPHRAGM. THE SLAB MAY NOT BE CUT IN ANY LOCATION. IN ADDITION, SPECIAL INSPECTION OF THE SLAB REINFORCEMENT IS REQUIRED PER IBC 2021 SECTION 1705.3

1

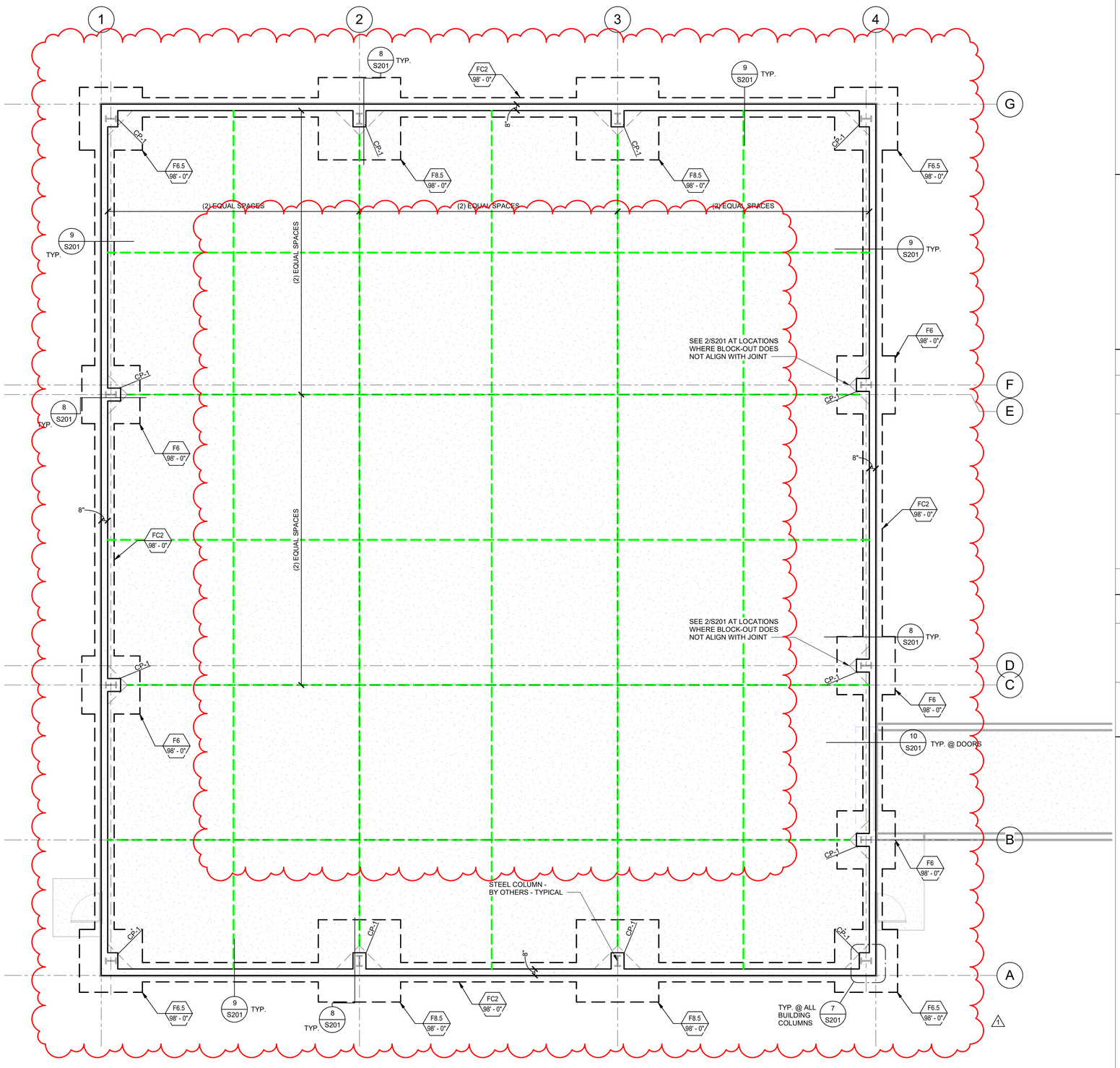

FOOTING AND FOUNDATION PLAN

SCALE : 3/16" = 1'-0"

A S101

EA SOLUTIONS
324 S. State Street, Suite 444
Salt Lake City, UT 84111
www.easolutions.us
385-549-8800

ARW ENGINEERS

Rev.	Description	Date	Appr.
1	ADD 01	11/11/24	

Designed by: JDH	Submitted: 10.04.2024	REV: 1	
Drawn by: LEE	File:		
Reviewed by: JDH	Scale: As indicated		
Submitted by: JDH	Project Number: EA24022TP		

KCC STORES
PEMB BLDG.
2010 N. RULON WHITE BLVD.
FARR WEST, UT 84404
PERMIT SUBMITTAL

FOOTING & FOUNDATION PLAN

SHEET NUMBER

S101

DOWEL SCHEDULE					
SLAB THICKNESS	SMOOTH DOWELS		DIAMOND DOWELS		COMMENTS
	SIZE	SPACING	SIZE	SPACING	
6" & 8"	1" DIA. x 16"	12"	3/8" x 4 1/2" x 4 1/2"	18"	
10" & 12"	1 1/4" DIA. x 18"	12"	3/4" x 4 1/2" x 4 1/2"	20"	

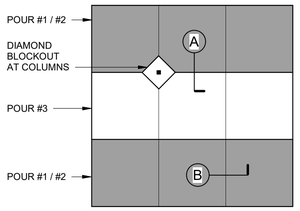

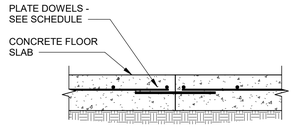

CONSTRUCTION JOINT (A)
SCALE : NONE

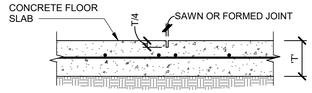

T = SLAB THICKNESS

CONTROL JOINT (B)
SCALE : NONE

NOTES:
1. JOINTS SHALL OCCUR AT MAIN COLUMN / GRID LINES W/ 15'-0" MAX. SPACING BETWEEN JOINTS AT 8" AND 10" SLABS, 20'-0" MAX. AT 12" SLABS.
2. SEE PLAN FOR SLAB THICKNESS 'T' AND REINFORCING SIZE AND SPACING.

TYPICAL CONCRETE SLAB JOINTS
SCALE : NONE
1 / S201

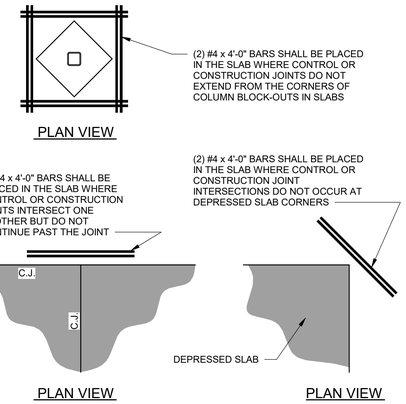

TYPICAL CONTROL JOINT DETAIL
SCALE : NONE
2 / S201

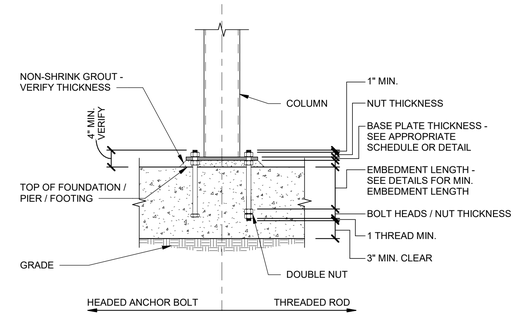

TYPICAL ANCHOR BOLT EMBEDMENT DETAIL
SCALE : NONE
3 / S201

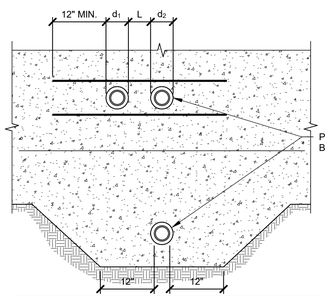

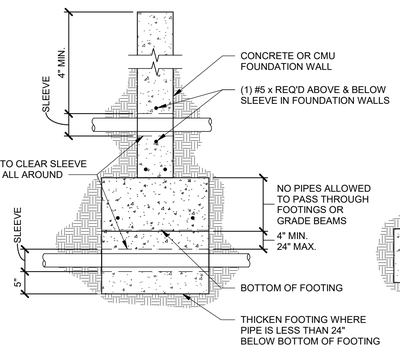

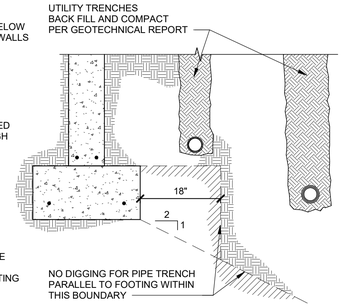

NOTES :
1. TYPICAL FOUNDATION WALL REINFORCING NOT SHOWN FOR CLARITY.
2. FOR OPENINGS LARGER THAN 12" IN ANY DIRECTION. SEE STRUCTURAL NOTE E-7.
3. DETAIL IS SIMILAR AT MASONRY FOUNDATION WALLS.
4. DISTANCE 'L' SHALL BE THE GREATER OF $(d_1 + d_2)/2$ OR 4".

PIPE CROSSING FOOTING / FOUNDATION WALL

PIPE PARALLEL TO FOOTING

ALLOWABLE PIPING LOCATIONS @ FOOTING DETAIL
SCALE : NONE
4 / S201

NOTES:
1. *ts* = LAP SPLICE LENGTH - SEE REBAR LAP SCHEDULE.
2. VERTICAL BARS NOT SHOWN.
3. THIS DETAIL IS APPLICABLE AT ALL FOOTINGS AND FOUNDATION WALLS.

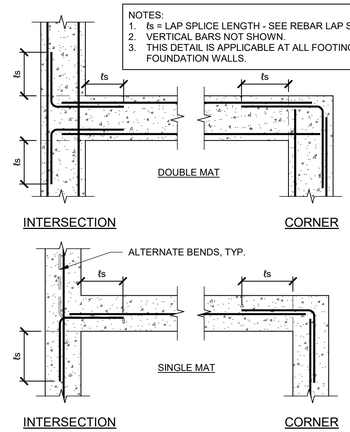

TYPICAL REINFORCING @ INTERSECTIONS IN CONCRETE DETAIL
SCALE : NONE
5 / S201

ANCHOR BOLT SCHEDULE		
GRID	SIZE	EMBEDMENT
1	3/4" DIA.	18"
2	1" DIA.	18"
3	1" DIA.	18"
4	3/4" DIA.	18"
NOTE: ALL ANCHOR BOLTS SHALL BE ASTM F1554 GRADE 105		

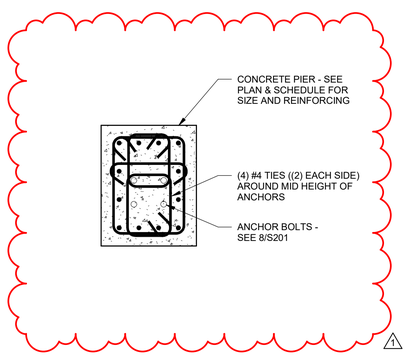

DETAIL
SCALE : NONE
7 / S201

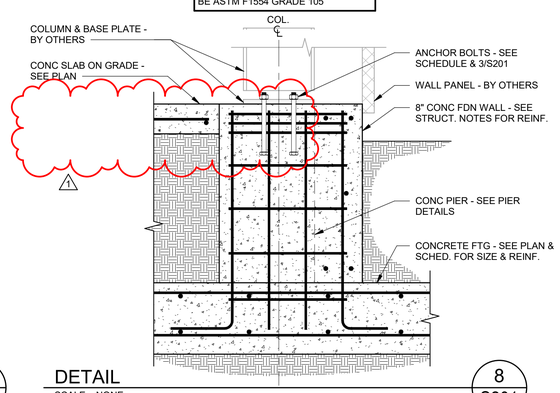

DETAIL
SCALE : NONE
8 / S201

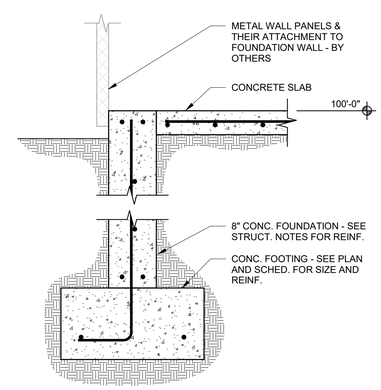

DETAIL
SCALE : NONE
9 / S201

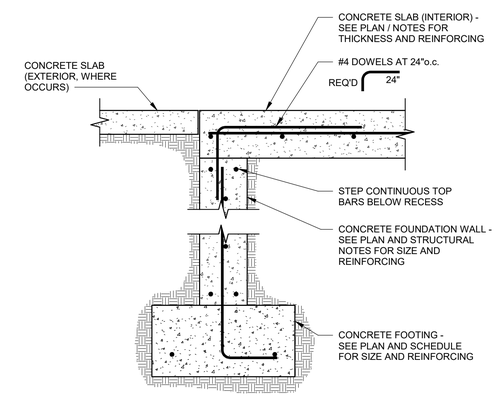

CONCRETE FOUNDATION @ OPENING
SCALE : NONE
10 / S201

EA SOLUTIONS
324 S. State Street, Suite 444
Salt Lake City, UT 84111
www.easolutions.us
385-549-8800

ARW ENGINEERS

Rev.	Description	Date	Appr.
1	ADD 01	11/11/24	

REV: 1

Designed by: JDH
Drawn by: LEE
Reviewed by: Checker
Submitted by: Approver
Submitted: 10.04.2024
File:
Scale: As indicated
Project Number: EA24022TP

KCC STORES
PEMB BLDG.
2010 N. RULON WHITE BLVD.
FARR WEST, UT 84404
PERMIT SUBMITTAL

TYPICAL DETAILS

SHEET NUMBER
S201

WSB LETTER OF CERTIFICATION

DATE 9/10/24
Job No. SBI37662

Reference: KIMBERLY CLARK
2010 RULON WHITE BLVD
OGDEN, UT

To whom it may concern:

This is to certify that the above referenced building components furnished by WSB are designed with good engineering practice and in accordance with the order documentation and the applicable structural design provisions set forth in the Applicable MBMA Low Rise Building Systems Manual, the applicable AISC and AISI Manuals, and the IBC 21 code, to sustain the requested design loads, specifically as follows:

Risk/Occupancy Category - II - Normal
Terrain_Category------- C
Wind Exposure ---- C
Building Enclosure ---- Enclosed
Live Load (Roof)-------- 20.00 psf
Live Load (Frame) ------ 20.00 psf
Dead Load ---------- 2.90 psf
Collateral Load -------- 5.00 psf
Rain Intensity(5yr) ------- 2.9900 in/hr
Rain Intensity(25yr) ------ 4.8600 in/hr
Ground snow Pg ---------- 43 psf
Snow Exposure coeff Ce -- 1.0000
Thermal Coeff Ct-------- 1.20
Slippery Roof Coeff Cs -- Y
Slope Factor coeff ----- 1.0000
Snow Importance ------- 1.00
Flat Roof Snow Load Pf-- 36.12 psf
Wind Load (Vult) -- 115 mph
Wind Importance* -- 1.00
Wind Load (Vasd) -- 89.08 mph
Cpi_P---------- 0.18
Cpi_S---------- -0.18
Component Loads= 25.981 / -34.642 psf
Seismic Importance--- 1.00
Ss---- 1.48 S1---- 0.54 Sds---- 1.18 Sd1---- 0.63
Sdc--- D Site_Class---- d
Seismic base shear, longitudinal 48.59 kips
Seismic base shear, transverse 49.21 kips
FRAME.R--- 3.2500
BRACE_SW.R--- 3.2500
Cs=(Sds/(I*R))
Equivalent Lateral force procedure used
Basic seismic resisting systems: Moment frames, braced frames, diaphragm
Special loads: as required (crane loads, mezzanine loads, snow drift loads)

* Wind Importance is not applicable to all building codes.
When not prescribed by code, Importance is taken as 1.0 in calculations.

This certification is limited to the structural design of the frames, secondary, and roof/wall covering manufactured by WSB. Accessory items such as doors, windows, louvers, translucent panels, and ventilators are not included. Also excluded are other parts of the project such as masonry, footings, and foundations, mechanical equipment, erection, and general contract work.

DEFLECTION LIMITS
WALL GIRT, MAX. DEFL. L/span = 90
ROOF PURLIN, L.L. DEFL. L/span = 180
RIGID FRAME VERT. DEFL. L/span = 180
RIGID FRAME HORIZ. DEFL. H/span = 60

WESTERN STEEL BUILDINGS
PH: 435-565-6882
Fax: 435-503-9467

BUILDING DATA:

WIDTH (ft) = 90
LENGTH (ft) = 80
EAVE HEIGHT (ft) = 29.5
ROOF SLOPE (rise/12") = 1.0:12
SIDEWALL BAY SPACING = 3 at 26.67

LEFT ENDWALL BAY SP = 3 at 30

RIGHT ENDWALL BAY SP = 1 at 14

FR. SIDEWALL GIRT TYPE = Bypass
BK. SIDEWALL GIRT TYPE = Bypass
LT. ENDWALL GIRT TYPE = Bypass
RT. ENDWALL GIRT TYPE = Bypass
ROOF FRAMING = Bypass PURLINS
INTERIOR FRAMING = 2 Rigid Frames, Clear Span

ROOF PANEL TYPE = TSS-324
ROOF PANEL GAUGE = 24 GA
ROOF PANEL COLOR = Galvalume

WALL PANEL TYPE = PBR
WALL PANEL GAUGE = 26 GA
WALL PANEL COLOR = POLAR WHITE

SUPPLIED OPTIONS AND ACCESSORIES

GUTTERS AND DOWNSPOUTS
FRONT SIDEWALL (ft): 80 FRONT Downspouts: 4
BACK SIDEWALL (ft): 80 BACK Downspouts: 4
COLOR: POLAR WHITE COLOR: POLAR WHITE

ROOF EDGE TRIM = COLOR: POLAR WHITE
CORNER TRIM = COLOR: POLAR WHITE
OPENING TRIM = COLOR: POLAR WHITE
BASE TRIM = COLOR: POLAR WHITE

WALK DOORS = N\A

ROOF INSULATION = R48 MULTI-LAYER ENERGY SAVER (WSB) 2

WALL INSULATION = R19 (RSB)

LINER PANEL = N\A

CANOPIES \ EXTENSIONS= N\A

THESE DRAWINGS ARE SUBMITTED FOR CONSTRUCTION, AND ARE DEEMED TO BE FINAL DRAWINGS. IT IS THE CUSTOMER'S RESPONSIBILITY TO ENSURE THIS SET OF DRAWINGS ARE THE SOLE SET OF DRAWINGS IN THE HANDS OF THE ERECTOR AND OTHER PROFESSIONAL TRADES ON THE PROJECT SITE

ISSUED FOR CONSTRUCTION

ENGINEERING CERTIFICATION:

PROFESSIONAL ENGINEER
No. 10124637
PHILIP PERKINS
STATE OF UTAH

REVIEWED
By Philip Perkins at 9:26 am, Nov 15, 2024

REMARKS/NOTES

1.

PROJECT: 90X80 SHOP	BLDG SIZE: 90.00' x 80.00' x 29.50'		JOB NUMBER
2010 RULON WHITE BLVD OGDEN, UT	DESIGN: PP	DRAWN: MH	WSB37662
	DATE: 11/4/24	CHECK:	ACCT# 14046
CUSTOMER: KIMBERLY CLARK	SCALE: NONE	REV. NO: 2	DRAWING NUMBER
DWG NAME: DRAWINGS COVER PAGE			SHEET 1 OF 15

GENERAL NOTES: MBM=METAL BUILDING MANUFACTURER

1. MANUFACTURING AND FABRICATION PROCEDURES SHALL BE IN ACCORDANCE WITH MBM's STANDARD PRACTICES WHICH ARE BASED ON THE APPLICABLE SECTIONS RELATING TO DESIGN REQUIREMENTS, ALLOWABLE STRESSES, AND FABRICATION TOLERANCES PER THE LATEST EDITIONS OF 'MBMA–COMMON INDUSTRY PRACTICES' AND 'AISC CODE OF STANDARD PRACTICE' AND THE 'AWS STRUCTURAL WELDING CODES D1.1 & D1.3

2. MATERIALS

MATERIALS	ASTM DESIGNATION	MIN. YIELD
HOT ROLLED SHAPES	A36	Fy= 36 ksi
STRUCT. STEEL PLATE	A572	Fy= 55 ksi
STRUCT. STEEL SHEET	A1011 (SS)	Fy= 55 ksi
FLANGE/END PLATE MATERIAL	A529	Fy= 55 ksi
COLD FORM. LT. GA. SHAPES	A1011 (SS)	Fy= 55 ksi
ROOF SHEETING	A792 (SS)	Fy= 80 ksi
WALL SHEETING	A792 (SS)	Fy= 80 ksi
MACHINE BOLTS	A307	Fy= 36 ksi
HIGH STR. BOLTS	F3125 (A325)	Fy= 120 ksi
ANCHOR BOLTS (if supplied)	A36/F1554	Fy= 36 ksi
PIPE (interior or posts)	A53, GRADE A or B	Fy= 30 ksi
RECTANGULAR TUBE (interior or posts)	A500, GRADE B	Fy= 46 ksi

3. PRIMER

SHOP PRIMER PAINT IS A RUST INHIBITIVE PRIMER WHICH MEETS OR EXCEEDS THE END PERFORMANCE OF FEDERAL SPECIFICATIONS TT–P–636 AND TT–P–664 AND IS A RED OXIDE OR GRAY PRIMER. PRIMER IS NOT INTENDED FOR LONG TERM EXPOSURE TO THE ELEMENTS. MBM IS NOT RESPONSIBLE FOR ANY DETERIORATION OF THE SHOP PRIMER AS A RESULT OF IMPROPER HANDLING AND/OR STORAGE. MBM SHALL NOT BE RESPONSIBLE FOR ANY FIELD APPLIED PAINT AND/OR COATINGS. (Section 6.5 AISC Code of Standard Practice, 9th ED.)

4. A325 BOLT TIGHTENING REQUIREMENTS

ALL HIGH STRENGTH BOLTS ARE A325–N UNLESS SPECIFICALLY NOTED OTHERWISE. STRUCTURAL BOLTS SHALL BE TIGHTENED BY THE TURN OF NUT METHOD IN ACCORDANCE WITH THE CURRENT EDITION OF THE 'AISC STEEL CONSTRUCTION MANUAL'. A325 BOLTS ARE SUPPLIED WITHOUT WASHERS UNLESS NOTED OTHERWISE. UNLESS NOTED OTHERWISE, ALL BOLTED CONNECTIONS ARE DESIGNED AS BEARING TYPE CONNECTIONS WITH THE BOLT THREADS INCLUDED IN THE SHEAR PLANE.

5. ERECTION NOTE: (ERECTION AND UNLOADING NOT BY MBM)

ALL BRACING SHOWN AND PROVIDED BY MBM FOR THIS BUILDING IS REQUIRED AND SHALL BE INSTALLED BY THE ERECTOR AS A PERMANENT PART OF THE STRUCTURE. IF ADDITIONAL BRACING IS REQUIRED FOR STABILITY DURING ERECTION, IT SHALL BE THE ERECTOR'S RESPONSIBILITY TO DETERMINE THE AMOUNT OF SUCH BRACING AND TO PROCURE AND INSTALL AS NEEDED.

6. SHORTAGES (SEE MBMA 5.2.1)

THE QUANTITY OF CRATES AND STRUCTURAL ITEMS SHIPPED SHALL BE CHECKED AND ANY SHORTAGES OR OTHER DISCREPANCIES WITH RESPECT THERETO, SHALL BE REPORTED TO MBM ON THE DAY OF DELIVERY AND SUCH DISCREPANCY CONFIRMED IN WRITING WITHIN (7) SEVEN DAYS. WITH RESPECT TO ITEMS OR QUANTITIES WITHIN UNOPENED CRATES AND ANY LATENT DEFECTS, IT SHALL BE THE DUTY OF THE PURCHASER TO NOTIFY MBM ON THE DATE SUCH DEFECT OR SHORTAGE IS DISCOVERED AND CONFIRM SUCH NOTICE IN WRITING TO MBM WITHIN (7) DAYS THEREOF.

7. CORRECTIONS OF ERRORS AND REPAIRS (SEE MBMA 6.10)

CLAIMS FOR CORRECTION OF ALLEGED MISFITS WILL BE DISALLOWED UNLESS MBM SHALL HAVE RECEIVED PRIOR NOTICE THEREOF AND ALLOWED REASONABLE INSPECTION OF SUCH MISFITS. THE CORRECTION OF MINOR MISFITS BY USE OF DRIFT PINS TO DRAW THE COMPONENTS INTO LINE, MODERATE AMOUNTS OF REAMING, SHIMMING, CHIPPING AND CUTTING, AND THE REPLACEMENT OF MINOR SHORTAGES OF MATERIAL ARE A NORMAL PART OF ERECTION AND ARE NOT SUBJECT TO CLAIM. NO PART OF THE BUILDING MAY BE RETURNED FOR ALLEGED MISFITS WITHOUT THE PRIOR APPROVAL OF MBM

GENERAL NOTES (CONT.):

8. CLOSURE STRIPS ARE FURNISHED FOR APPLICATION

INSIDE – Under roof panels at eave.
OUTSIDE – Between endwall panels and rake trim.
– Under continuous ridge vent skirts.
Note: Conditions vary at hips, valleys, fascias, mansards and canopies. Refer to Erection Drawings.

9. VERTICAL DEFLECTION OF RIGID FRAMES

Buildings which are loaded in regions of the country where snow and ice accumulation may occur should be aware that purlins and rigid frames particularly long span frames, will deflect vertically when subjected to snow and ice loads. two areas which require special precaution during interior erection and are greatly affected by vertical deflection, should be carefully considered:

10.) Metal Studs should never be attached directly to rigid frames or purlins without slotted vertical clips. Even a small vertical deflection can cause a metal stud to bow out significantly.

11.) Care should be taken when supporting acoustical or other type hanging ceiling tiles from purlins and rigid frames. In hallways or small rooms the tiles should be supported from the permanent walls and partitions rather then the purlins. In larger rooms where the ceiling must be supported from the roof system, it is important to allow the ceiling to deflect at the outside walls at the same rate it deflects in the center of the room. If the ceiling is supported continuously along any non–yielding wall while rest of the ceiling is deflecting, obvious problems occur.

12. ROOF PENETRATION WARRANTY CONSIDERATIONS

If a weather tightness warranty is to be provided for your project, MBM requires that the roof curbs and decktights be pre–approved by MBM. All roof curbs must be compatible with the roof panel. The roof curbs should have male and female side ribs and water diverters at the upslope side of the roof curbs. The following manufactures are currently pre–approved:

Manufacturer	Location	Web Site	Phone
LM Curbs	Longview, TX	lmcurbs.com	800–284–1412
Buildex	varies	itwbuildex.com	
Dyna–Flash	varies	dynamicfastener.com	
Dek–Tite	varies	itwbuildex.com	

10. SEAMER RENTAL INFORMATION

MBM utilizes Quality Roof Seamers Inc. for all seamer rental needs. It is your responsibility to obtain seamer rental for your project needs unless otherwise stated in the contract documents. Contact information follows:

Quality Roof Seamers Inc.
8265 MS–178
Olive Branch, MS 38654
(622) 895–1222
http://www.qualityroofseamers.com/

Direct Rental Addresse:
http://www.qualityroofseamers.com/manufacture/60–sbi–metal–buildings

PROFESSIONAL ENGINEER
No. 10124637
PHILIP
PERKINS
STATE OF UTAH

BUYER/END USE CUSTOMER RESPONSIBILITIES

1. It is the responsibility of the BUYER/END USER to obtain appropriate approvals and secure necessary permits for City, County, State, or Federal Agencies as required, and to advise/release MBM to proceed to fabricate upon receiving such.

2. MBM's standard specifications apply unless stipulated otherwise in theContract Documents. MBM's design, fabrication, quality criteria, standards, practices, methods, and tolerances shall govern the work with any other interpretations to the contrary notwithstanding. It is understood by both Parties that the BUYER/END USER is responsible for clarification of inclusions or exclusions from the architectural plans and/or specifications.

   SBI is not responsible for any testing of welds, screws, bolts, etc... Any testing including non–destructive testing of welds is the responsibility of the Buyer/End User to procure. SBI standards for quality control of welds is visual inspection during fabrication.

3. In case of discrepancies between MBM's structural steel plans and plans for other trades, MBM's plans shall govern. (Section 3, AISC Code of Standard Practices, 9th edition)

4. Approval of MBM drawings and calculations indicates that MBM has correctly interpreted and applied the Contract Documents. This approval consitutes the contractor/owners acceptance of the MBM's design concepts, assumptions, and loading. (Section 4 AISC Code and MBMA 3.3.3)

5. Once the BUYER/END USER has signed MBM's Approval Package and the project is released for fabrication, changes shall be billed to the BUYER/END USER including material, engineering, and other cost. An additional fee may be charged if the project must be moved from the fabrication and shipping sched..

6. The BUYER/END USER is responsible for overall project coordination. All interface, compatibility, and design considerations concerning any materials not furnished by MBM are to be considered and coordinated by the BUYER/END USER. Specific design criteria concerning this interface between materials must be furnished before release for fabrication or MBM's assumptions will govern. (Section 4 and Commentary, AISC)

7. It is the responsibility of the BUYER/END USER to insure that MBM's plans comply with the applicable requirements of any governing building authorities. The supplying of sealed engineering data and drawings for the metal building system does not imply or constitute an agreement that MBM or its design engineers are acting as the 'Engineer of Record' or 'Design Professional' for a construction project. These drawings are sealed only to certify the design of the structural components furnished by MBM.

8. The BUYER/END USER is responsible for setting of anchor bolts and erection of steel in accordance with MBM's "FOR CONSTRUCTION" drawings only. Temporary supports such as guys, braces, falsework, cribbing or other elements required for the erection operation shall be determined and furnished and installed by the erector. No items should be purchased from a preliminary set of drawings, including anchor bolts. Use only final "FOR CONSTRUCTION" drawings for this use. (Section 7 AISC Code)

9. MBM is responsible for the design of the anchor bolt to permit the transfer of forces between the base plate and the anchor bolt in shear, bearing, and tension, but is not responsible for the transfer of anchor bolt forces to the concrete or the adequacy of the anchor bolt in relation to the concrete.
   Unless otherwise provided in the Order Documents, MBM does not design and is not responsible for the design, material and construction of the foundation or foundation embedments, The BUYER/END USER should assure himself that adequate provisions are made in the foundation design for loads imposed by column reactions of the building, other imposed loads, and bearing capacity of the soil and other conditions of the building site. It is recommended that the anchorage and foundation of the building be designed by a Registered Professional Engineer experienced in the design of such structures. (Section 3.2.2 MBMA Low Rise Building Systems Manual)

10. Normal erection operations include the corrections of minor misfits by moderate amounts of reaming, chipping, welding, or cutting, and the drawing of elements into line through the use of drift pins. Errors which cannot be corrected by the foregoing means or which require major changes in member design are to be reported immediately to MBM by the BUYER/END USER, to enable whoever is responsible either to correct the error or to approve the most efficient and economic method of correction to be used by others. (Section 6–10 MBMA Manual)

11. Neither the fabricator nor the BUYER/END USER will cut, drill, or otherwise alter his work, or the work of other trades, to accommodate other trades, unless such work is clearly specified in the contract documents. Whenever such work is specified. the BUYER/END USER is responsible for furnishing complete information as to materials, size, location, and number of alterations prior to preparation of shop drawings. (Section 7 'AISC Code, MBMA Manual Section 8.6)

12. WARNING: In no case should Aluminized Zinc steel panels be used in conjunction with lead or copper. Run–off from these materials are highly corrosive to the Aluminum Zinc coatings.

13. SAFETY COMMITMENT: MBM has a commitment to manufacture quality building components that can be safely erected. However, the safety commitment and job site practices of the erector are beyond the control of MBM. It is strongly recommended that safe working conditions and accident prevention practices be the top priority of any job site. Make sure that all Local, State, and Federal safety and health standards are always followed. Insure that employees are aware and trained in emergency procedures.

14. Please note OSHA now requires the first girt placed in all lapping conditions be firmly attached prior to placing the second lapped girt.

ISSUED FOR CONSTRUCTION

THESE DRAWINGS ARE SUBMITTED FOR CONSTRUCTION, AND ARE DEEMED TO BE FINAL DRAWINGS. IT IS THE CUSTOMER'S RESPONSIBILITY TO ENSURE THIS SET OF DRAWINGS ARE THE SOLE SET OF DRAWINGS IN THE HANDS OF THE PROJECT MANAGER AND OTHER PROFESSIONAL TRADES ON THE PROJECT SITE.

REVIEWED
By Philip Perkins at 9:26 am, Nov 15, 2024

WESTERN STEEL BUILDINGS
PH: 435–565–6882
Fax: 435–503–9467

PROJECT: 90X80 SHOP	BLDG SIZE: 90.00' x 80.00' x 29.50'		JOB NUMBER
2010 RULON WHITE BLVD OGDEN, UT	DESIGN:	DRAWN: JLR	WSB37662
	DATE: 10/1/24	CHECK:	
CUSTOMER: KIMBERLY CLARK	SCALE: NONE	REV. NO:	DRAWING NUMBER
DWG NAME: GENERAL NOTES			SHEET 2 OF 15

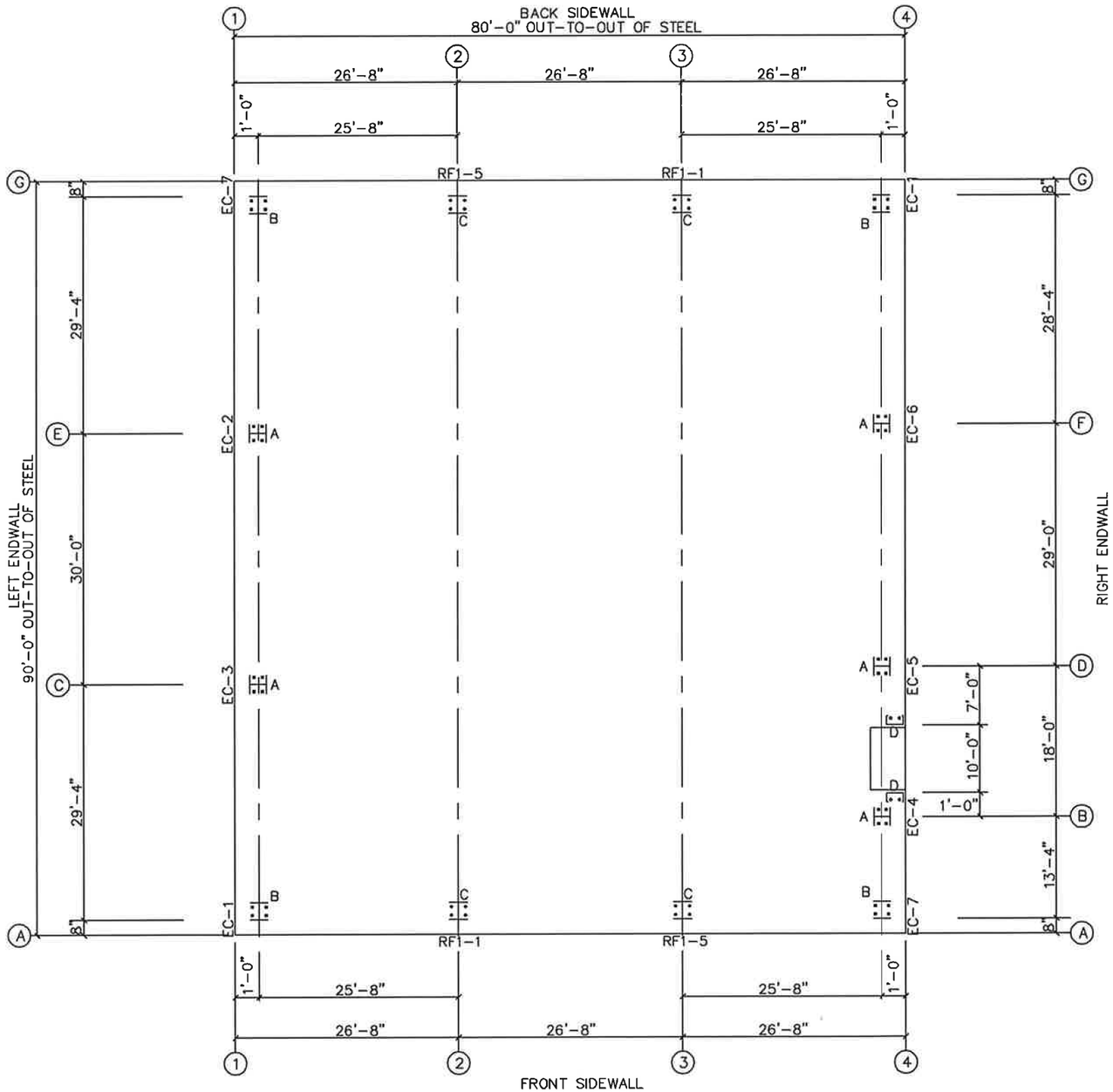

ANCHOR BOLT PLAN

NOTE: All Base Plates @ 100'-0" (U.N.)

PROFESSIONAL ENGINEER
No. 10124637
PHILIP PERKINS
STATE OF UTAH

REVIEWED

By Philip Perkins at 9:26 am, Nov 15, 2024

ISSUED FOR CONSTRUCTION

THESE DRAWINGS ARE SUBMITTED FOR CONSTRUCTION, AND ARE DEEMED TO BE FINAL DRAWINGS. IT IS THE CUSTOMER'S RESPONSIBILITY TO ENSURE THIS SET OF DRAWINGS ARE THE SOLE SET OF DRAWINGS IN THE HANDS OF THE ERECTOR AND OTHER PROFESSIONAL TRADES ON THE PROJECT SITE.

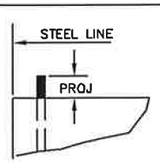

NOTE:
All dimensions shown on plans are from metal building steel line.

slab dimensions or notch dimensions are to be determined by contractor.

WESTERN STEEL BUILDINGS
PH: 435-565-6882
Fax: 435-503-9467

PROJECT: 90X80 SHOP	BLDG SIZE: 90.00' x 80.00' x 29.50'		JOB NUMBER
2010 RULON WHITE BLVD OGDEN, UT	DESIGN:	DRAWN: JLR	WSB37662
	DATE: 10/1/24	CHECK:	
CUSTOMER: KIMBERLY CLARK	SCALE: NONE	REV. NO:	DRAWING NUMBER
DWG NAME: ANCHOR BOLT PLAN & DETAILS			SHEET 3 OF 15

FRAME LINES: 2 3

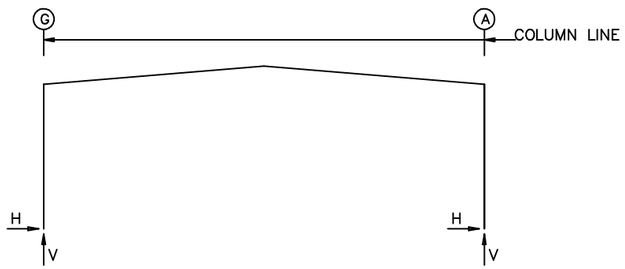

RIGID FRAME: MAXIMUM REACTIONS

Frm Line	Col Line	Column_Reactions(k) Load Id	Hmax H	V Vmax	Load Id	Hmin H	V Vmin
2*	G	1	30.1	56.7	4	−8.7	−11.7
					6	−1.5	−14.2
2*	A	5	8.7	−11.7	2	−30.1	56.7
		2	−30.1	56.7	7	1.5	−14.2

2* Frame lines: 2 3

ENDWALL COLUMN: MAXIMUM REACTIONS

Frm Line	Col Line	Column_Reactions(k) Load Id	Hmax H	V Vmax	Load Id	Hmin H	V Vmin
1	G	6	0.0	−2.9	11	−10.6	−10.4
		9	0.0	13.9			
1	E	12	6.2	−8.2	13	−5.6	−5.0
		14	0.0	22.6	12	6.2	−8.2
1	C	15	6.2	−8.2	16	−5.6	−5.0
		17	0.0	22.6	15	6.2	−8.2
1	A	7	0.0	−2.9	11	−10.6	−10.4
		9	0.0	13.9			
4	A	6	0.0	−1.3	11	−10.6	−10.6
		8	0.0	12.4			
4	B	18	3.1	−2.6	13	−2.8	−2.6
		19	0.0	9.3	18	3.1	−2.6
4	D	12	4.9	−7.7	13	−4.5	−4.2
		19	0.0	20.9	10	0.0	−8.2
4	F	15	6.0	−7.9	16	−5.4	−4.7
		20	0.0	21.0	15	6.0	−7.9
4	G	7	0.0	−2.8	11	−10.6	−10.4
		9	0.0	13.7			

BUILDING BRACING REACTIONS

Wall Loc	Wall Line	Col Line	± Reactions(k) Wind Horz	Wind Vert	Seismic Horz	Seismic Vert	Panel_Shear (lb/ft) Wind	Seis
L_EW	1	E,C	4.2	4.2	11.8	11.8		
F_SW	A	1,2	6.4	6.6	15.8	16.3		
		3,4	6.4	6.6	15.8	16.3		
R_EW	4	D,F	4.2	4.4	11.8	12.3		
B_SW	G	4,3	6.4	6.6	15.8	16.3		
		2,1	6.4	6.6	15.8	16.3		

Reactions for seismic represent shear force, Eh
Reaction values shown are unfactored

NOTES FOR REACTIONS

Building reactions are based on the following building data:

Width	(ft)	=	90.0
Length	(ft)	=	80.0
Eave Height	(ft)	=	29.5/ 29.5
Roof Slope	(rise/12)	=	1.00/ 1.00
Roof Dead Load	(psf)	=	2.9
Wall Dead Load			
Left Endwall	(psf)	=	2.0
Right Endwall	(psf)	=	2.0
Front Sidewall	(psf)	=	2.0
Back Sidewall	(psf)	=	2.0
Live Load	(psf)	=	20.0
Collateral Load	(psf)	=	5.0
Snow Load	(psf)	=	36.1
Wind Speed	(mph)	=	115.0
Wind Code		=	IBC 21
Exposure		=	C
Closure		=	Enclosed
Internal Wind Coeff		=	−0.18, +0.18
Risk Category		=	II − Normal
Importance − Wind		=	1.00
Importance − Seismic		=	1.00
Seismic Design Category		=	D
Seismic Coeff	(Sms)	=	1.77

ID	Description
1	Dead+Collateral+Snow
2	Dead+Collateral+Snow+Snow_Drift
3	Dead+Collateral+Snow+Slide_Snow
4	0.6Dead+0.6Wind_Left1
5	0.6Dead+0.6Wind_Right1
6	0.6Dead+0.6Wind_Long1L
7	0.6Dead+0.6Wind_Long2L
8	1.17Dead+1.17Collateral+0.7Seismic_LongR
9	1.12Dead+1.12Collateral+0.75Live+0.53Seismic_LongR
10	0.43Dead+0.7Seismic_Left
11	0.43Dead+0.7Seismic_LongL
12	0.6Dead+0.6Wind_Left1+0.6Wind_Suction
13	0.6Dead+0.6Wind_Pressure+0.6Wind_Long1L
14	Dead+Collateral+E1UNB_SL_L
15	0.6Dead+0.6Wind_Right1+0.6Wind_Suction
16	0.6Dead+0.6Wind_Pressure+0.6Wind_Long2L
17	Dead+Collateral+E1UNB_SL_R
18	0.6Dead+0.6Wind_Suction+0.6Wind_Long1L
19	Dead+Collateral+E2UNB_SL_L
20	Dead+Collateral+E2UNB_SL_R

GENERAL NOTES

1. METAL BUILDING MANUFACTURER ASSUMES NO RESPONSIBILITY OR LIABILITY FOR FOUNDATION DESIGN OR CONSTRUCTION.
2. THE FOUNDATION DESIGN SHOULD BE DONE WITH DUE REGARD TO EXISTING SOILS CONDITIONS FOR THE DESIGN LOADS AT THE ACTUAL JOB SITE.
3. ANCHOR BOLT DIAMETERS WERE DETERMINED BY THE AISC ALLOWABLE SHEAR-TENSION METHOD USING (Fy = 36 ksi)
4. ANCHOR BOLT LENGTH & METHOD OF TRANSFER OF FORCES FROM ANCHOR BOLTS TO THE FOUNDATION ARE TO BE DETERMINED BY OTHERS.IT IS RECOMMENDED THAT AN EXPERIENCED DESIGN PROFESSIONAL DETERMINE THIS METHOD.
5. BOTTOMS OF ALL BASE PLATES ARE AT THE SAME ELEVATION UNLESS NOTED.
6. ANCHOR BOLTS ARE NOT SUPPLIED BY THE METAL BUILDING MANUFACTURER.
7. IT IS THE RESPONSIBILITY OF THE ERECTOR TO PROVIDE FOR ALL TEMPORARY BRACING AS WELL AS A PLAN FOR INSTALLING IT. THIS INCLUDES SIZES, TYPE, LOCATION, AND QUANTITY.

ANCHOR BOLT SUMMARY

	Qty	Locate	Dia (in)	Type	Proj (in)
O	4	Jamb	1/2"	WEDGE	
⊠	36	Endwall	3/4"	F1554	2.50
⊕	16	Frame	1"	F1554	3.00

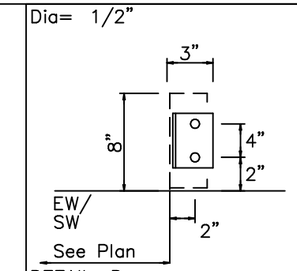

DETAIL D

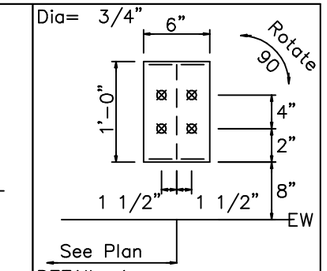

DETAIL A

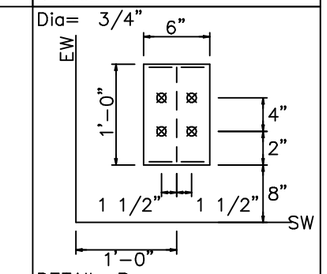

DETAIL B

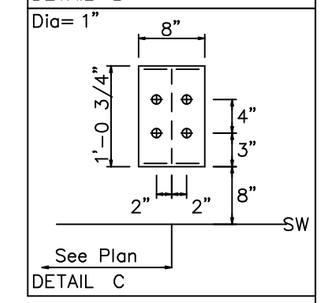

DETAIL C

PROFESSIONAL ENGINEER
No. 10124637
PHILIP PERKINS
STATE OF UTAH

REVIEWED
By Philip Perkins at 9:26 am, Nov 15, 2024

ISSUED FOR CONSTRUCTION

THESE DRAWINGS ARE SUBMITTED FOR CONSTRUCTION, AND ARE DEEMED TO BE FINAL DRAWINGS, IT IS THE CUSTOMER'S RESPONSIBILITY TO ENSURE THIS SET OF DRAWINGS ARE THE SOLE SET OF DRAWINGS IN THE HANDS OF THE ERECTOR AND OTHER PROFESSIONAL TRADES ON THE PROJECT SITE.

WESTERN STEEL BUILDINGS
PH: 435-565-6882
Fax: 435-503-9467

PROJECT: 90X80 SHOP	BLDG SIZE: 90.00' x 80.00' x 29.50'		JOB NUMBER
2010 RULON WHITE BLVD OGDEN, UT	DESIGN:	DRAWN: JLR	WSB37662
	DATE: 11/4/24	CHECK:	
CUSTOMER: KIMBERLY CLARK	SCALE: NONE	REV. NO:	DRAWING NUMBER
DWG NAME: ANCHOR BOLT DETAILS & REACTIONS			SHEET 4 OF 15

PROFESSIONAL ENGINEER
No. 10124637
PHILIP PERKINS
STATE OF UTAH

REVIEWED
By Philip Perkins at 9:26 am, Nov 15, 2024

SPECIAL BOLTS ROOF PLAN					
◇ ID	QUAN	TYPE	DIA	LENGTH	WASH
1	4	A325	1/2"	1 1/4"	2

1

MEMBER TABLE FRAME LINE			
QTY	MARK	PART	LENGTH
20	P-1	12X25Z12	29'-1 1/2"
20	P-2	12X25Z12	31'-7 1/2"
20	P-3	12X25Z12	29'-1 1/2"
2	P-4	12X25Z14	29'-1 1/2"
2	P-5	12X25Z14	29'-1 1/2"
2	E-1	12E14.1	26'-7 1/2"
2	E-2	12E14.1	26'-7 1/2"
2	E-3	12E14.1	26'-7 1/2"
4	CB-9	HW-380	37'-5 1/2"
4	CB-10	HW-380	36'-10"
4	CB-11	HW-374	30'-6 3/4"
4	CB-12	HW-374	30'-11"
7	SP-1	PeakStab	2'-1 7/16"
7	SP-2	PeakStab	2'-0 3/4"
84	SI-1	Int-Ang	5'-2 1/16"
168	SI-2	Int-Ang	4'-2 1/4"
24	SE-1	Ev-Ang	4'-6 13/16"
2	SE-2	Ev-Ang	5'-2 5/16"
2	SE-4	Ev-Ang	5'-2 5/8"
32	ESS1		6"

TRIM TABLE			
◇	PART	LENGTH	DETAIL
0	FL-213	20'-6"	TRIM_50

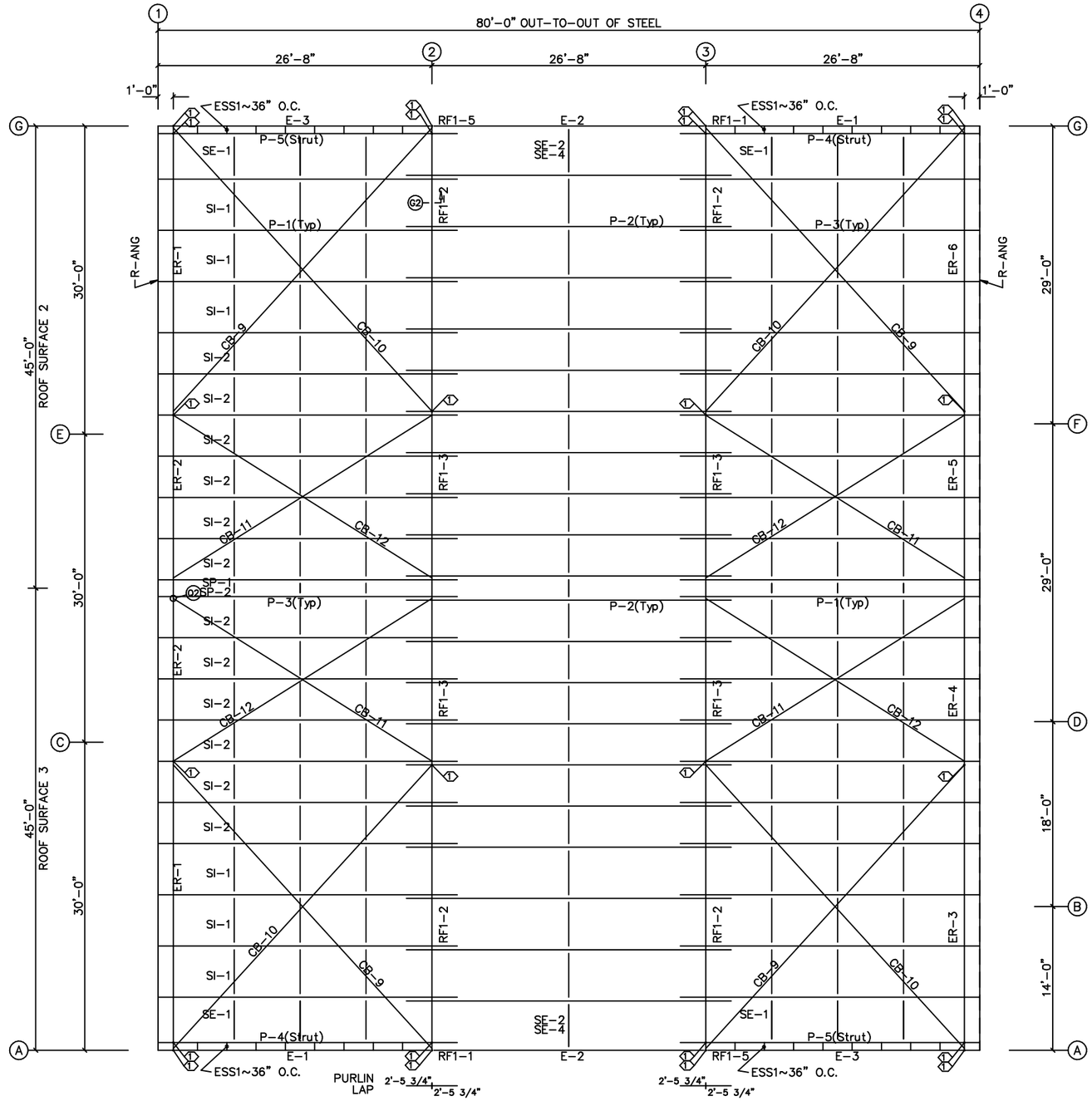

ROOF FRAMING PLAN

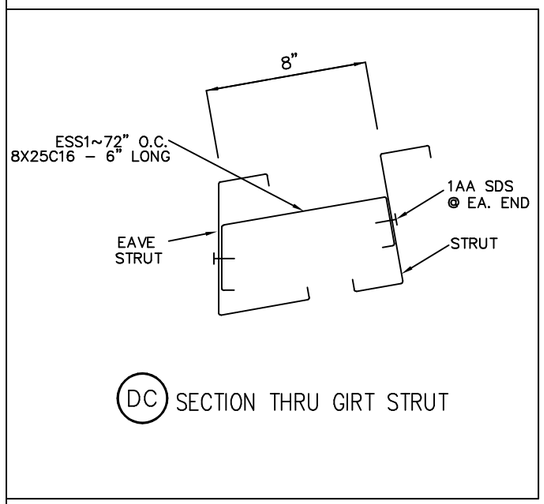

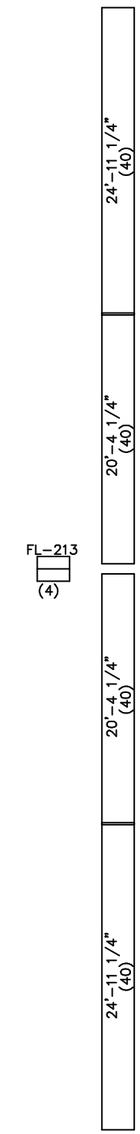

ROOF SHEETING
PANELS: 24 Ga. TSS
Galvalume

GENERAL NOTES:

1. The purlins will have one leg with a wider flange, and should be facing in opposite directions at each adjacent bay. (wide leg up,wide leg down, wide leg up, etc.)
2. All purlins are bolted in place with (2) 1/2"x1-1/4" A307 bolts on a diagonal pattern at the clip and (2) 1/2"X1-1/4" A307 bolts at each end of the lap (6-bolts total per connection see detail drawings)
3. Eave struts are bolted with (2) 1/2"x1-1/4" A307 bolts at each end, also supplied are eave strut cover angles to fit on top of the joint between the struts to close off the gap and eliminate light penetration.
4. If sag angle is shown on this plan, secure in place by bending tabs over as shown in detail drawings. Note: PBR panels only require one run of sag angle in bottom set of slots, Standing Seam panels require double runs of sag angle, the purlins are always provided with a (4) slot pattern, alternate left to rigt at each adjacent purlin space.
5. Roof sheeting should be installed with the correct laps, overhangs, and screw patterns as shown in the detail drawings.
6. It is the responsibility of the erector to provide all temporary bracing as well as a plan for installing and securing it. This includes size, type, location, and quantity.
7. Hanging loads suspended from purlins shall be attached to the purlin webs so as to prevent distortion of the purlin flanges. Hanging loads shall not be attached to the lips of the purlins. Any attachment that is not made directly to the purlin web shall be submitted for review. In no case shall the load applied to a single purlin exceed 150 lb.

ISSUED FOR CONSTRUCTION

THESE DRAWINGS ARE SUBMITTED FOR CONSTRUCTION, AND ARE DEEMED TO BE FINAL DRAWINGS, IT IS THE CUSTOMER'S RESPONSIBILTY TO ENSURE THIS SET OF DRAWINGS ARE THE SOLE SET OF DRAWINGS IN THE HANDS OF THE ERECTOR AND OTHER PROFESSIONAL TRADES ON THE PROJECT SITE.

WESTERN STEEL BUILDINGS
PH: 435-565-6882
Fax: 435-503-9467

PROJECT: 90X80 SHOP	BLDG SIZE: 90.00' x 80.00' x 29.50'		JOB NUMBER
2010 RULON WHITE BLVD OGDEN, UT	DESIGN:	DRAWN: JLR	WSB37662
	DATE: 11/4/24	CHECK:	
CUSTOMER: KIMBERLY CLARK	SCALE: NONE	REV. NO: 1	DRAWING NUMBER
DWG NAME: ROOF FRAMING			SHEET 5 OF 15

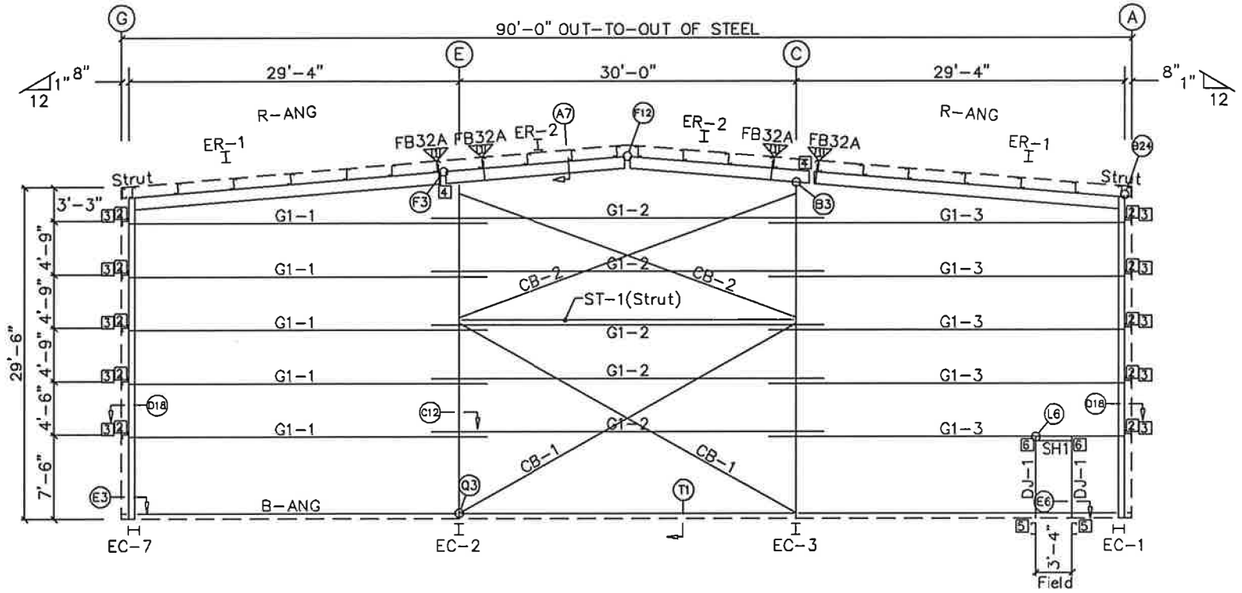

LEFT ENDWALL FRAMING: FRAME LINE 1

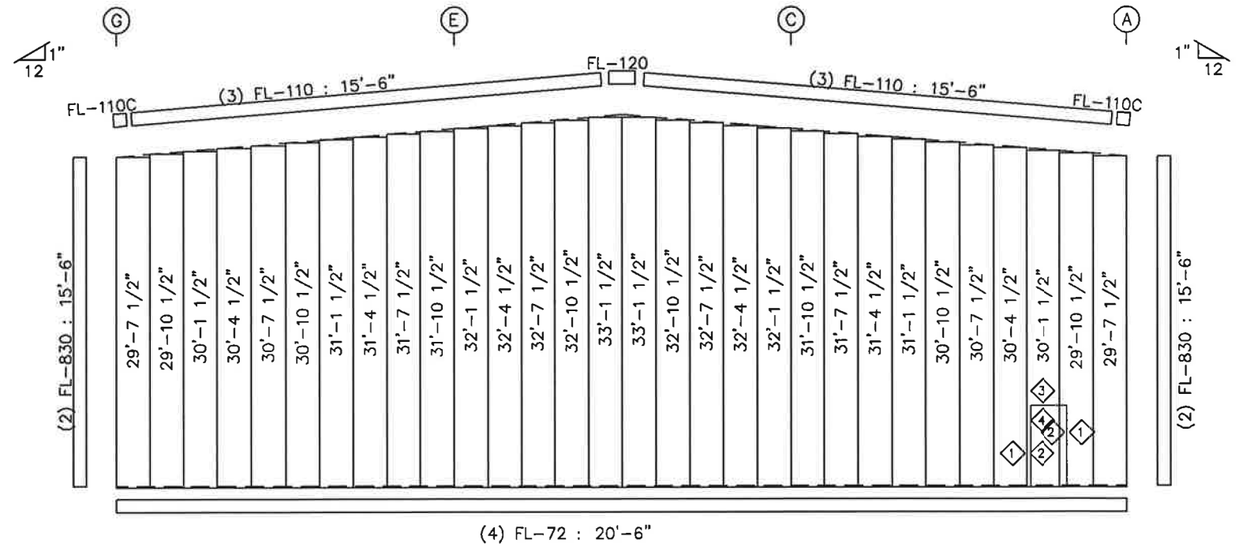

LEFT ENDWALL SHEETING & TRIM: FRAME LINE 1

PANELS: 26 Ga. PR – POLAR WHITE

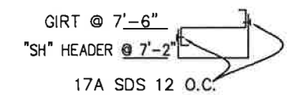

SECTION THRU "SH" HEADER

BOLT TABLE
FRAME LINE 1

LOCATION	QUAN	TYPE	DIA	LENGTH
Cor_Column/Raf	4	A325	1/2"	1 1/4"
ER-1/ER-2	4	A325	3/4"	1 1/2"
ER-2/ER-2	8	A325	3/4"	2 1/4"
Int_Column/Raf	4	A325	1/2"	1 1/4"
Strut	4	A325	1/2"	1 1/4"

TRIM TABLE
FRAME LINE 1

ID	MARK	LENGTH	DETAIL
	FL-110	15'-6"	TRIM_46
	FL-830	15'-6"	TRIM_12
1	FL-37	7'-6"	TRIM_18
2	FL-22	7'-6"	TRIM_18
3	37-SH	3'-6"	TRIM_18
4	FL-24	4'-6"	TRIM_19

MEMBER TABLE
FRAME LINE 1

QTY	MARK	PART	LENGTH
1	EC-1	W12641	28'-7 5/8"
1	EC-2	W12641	30'-0 3/16"
1	EC-3	W12641	30'-0 3/16"
1	EC-7	W12641	28'-7 5/8"
2	ER-1	W12661	27'-2 5/8"
2	ER-2	W12661	16'-3 15/16"
2	DJ-1	08X25C16	7'-3"
5	G1-1	08X25Z12	31'-9 1/2"
5	G1-2	08X25Z12	34'-11 1/2"
5	G1-3	08X25Z12	31'-9 1/2"
1	ST-1	W08841	29'-11 3/4"
2	CB-1	0.88_ROD	34'-0 5/16"
2	CB-2	0.88_ROD	32'-10"
1	SH-1	08X5X14	3'-3 1/2"

CONNECTION PLATES
FRAME LINE 1

ID	QUAN	MARK/PART
1	4	k12
2	10	r1
3	10	ZGF
4	2	h2
5	2	c1
6	2	b2

FLANGE BRACE TABLE
FRAME LINE 1

ID	MARK	LENGTH
1	FB32A	2'-8"

REVIEWED
By Philip Perkins at 9:26 am, Nov 15, 2024

ISSUED FOR CONSTRUCTION

THESE DRAWINGS ARE SUBMITTED FOR CONSTRUCTION, AND ARE DEEMED TO BE FINAL DRAWINGS. IT IS THE CUSTOMER'S RESPONSIBILTY TO ENSURE THIS SET OF DRAWINGS ARE THE SOLE SET OF DRAWINGS IN THE HANDS OF THE ERECTOR AND OTHER PROFESSIONAL TRADES ON THE PROJECT SITE.

GENERAL NOTES:

1. Sheets on buildings with roof slopes greater than 1-1/4"/12" must be field cut to cope with slope of roof.
2. Screw patterns for sheeting shall be to use 3ea screws at the bottom, top, and at each girt. Space these screws equally at about 1" off of each panel rib. Lap screws should be placed at bottom, top, each girt, two (2) equally spaced between base and first girt, and one (1) at the midpoint between all other girts. Tek5 Drillers are supplied as needed for non secondary steel.
3. Man doors are to be field located per customer and contractor shall install door frame stiffener angles on the back of each 'lock-side' of jambs at at approx. 3'-4' up on frames down to base angle (channel) at 30-45deg. Extra base angle supplied for contractor to field cut as needed.
4. All girts are bolted in place with (2) 1/2"x1-1/4" A307 bolts on a diagonal pattern at the clip and (2) 1/2"X1-1/4" A307 bolts at each end of the lap (6-bolts total per connection see detail drawings)
5. It is the responsibility of the erector to provide all temporary bracing and a plan for installing it. This includes size, type, location, and q'ty.

WESTERN STEEL BUILDINGS
PH: 435-565-6882
Fax: 435-503-9467

PROJECT: 90X80 SHOP	BLDG SIZE: 90.00' x 80.00' x 29.50'		JOB NUMBER
2010 RULON WHITE BLVD OGDEN, UT	DESIGN:	DRAWN: JLR	WSB37662
	DATE: 10/1/24	CHECK:	
CUSTOMER: KIMBERLY CLARK	SCALE: NONE	REV. NO:	DRAWING NUMBER
DWG NAME: ENDWALL FRAMING			SHEET 6 OF 15

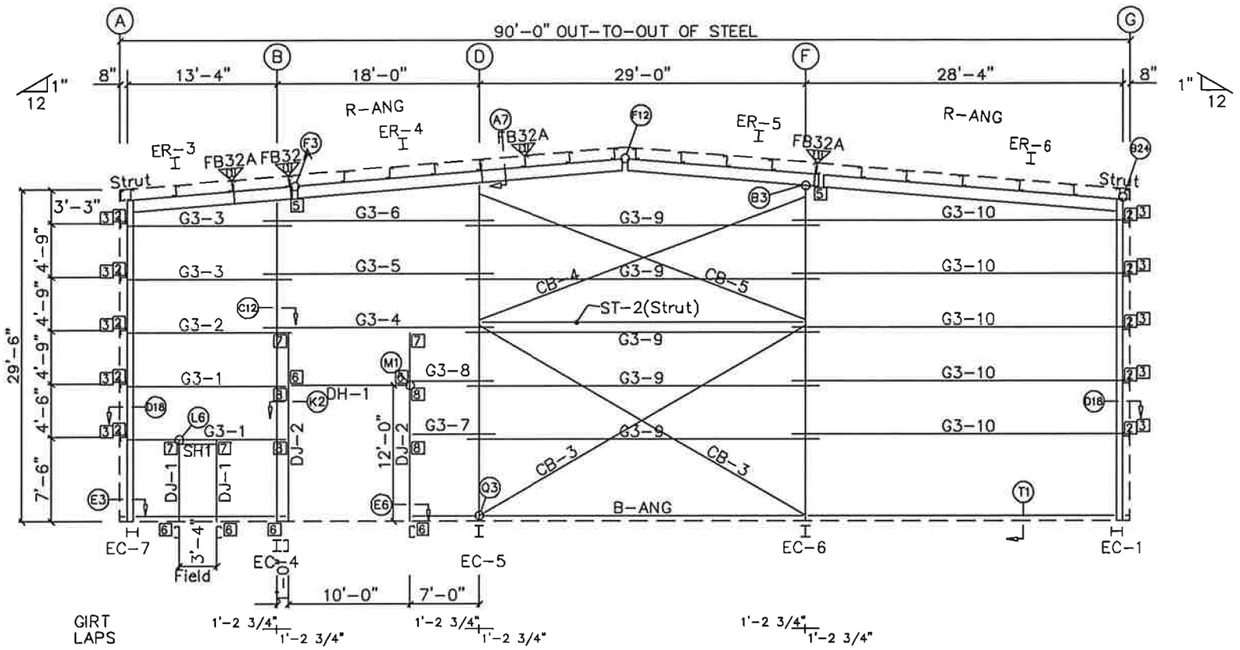

RIGHT ENDWALL FRAMING: FRAME LINE 4

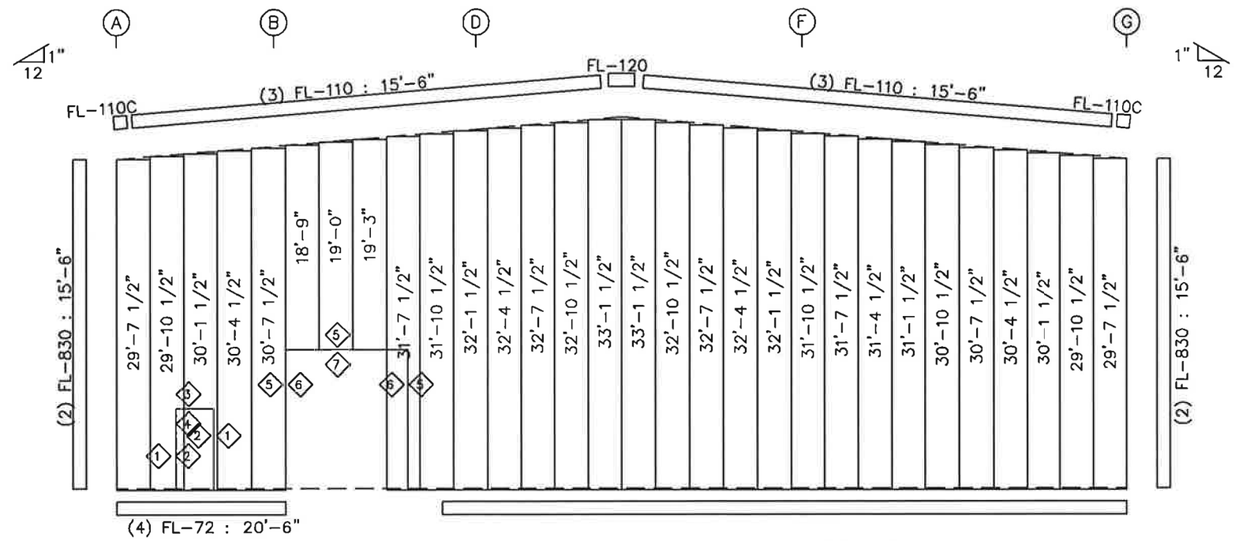

RIGHT ENDWALL SHEETING & TRIM: FRAME LINE 4

PANELS: 26 Ga. PR – POLAR WHITE

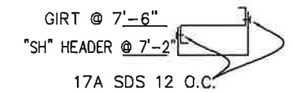

SECTION THRU "SH" HEADER

BOLT TABLE
FRAME LINE 4

LOCATION	QUAN	TYPE	DIA	LENGTH
Cor_Column/Raf	4	A325	1/2"	1 1/4"
ER-3/ER-4	4	A325	3/4"	1 1/2"
ER-4/ER-5	8	A325	3/4"	2"
ER-5/ER-6	4	A325	3/4"	1 1/2"
Int_Column/Raf	4	A325	1/2"	1 1/4"
Strut	4	A325	1/2"	1 1/4"

CONNECTION PLATES
FRAME LINE 4

ID	QUAN	MARK/PART
1	4	k12
2	10	r1
3	10	ZGF
4	1	h3
5	2	h2
6	6	c1
7	4	b2
8	4	b1

TRIM TABLE
FRAME LINE 4

ID	MARK	LENGTH	DETAIL
	FL-110	15'-6"	TRIM_46
	FL-830	15'-6"	TRIM_12
1	FL-37	7'-6"	TRIM_18
2	FL-22	7'-6"	TRIM_18
3	37-SH	3'-6"	TRIM_18
4	FL-24	4'-6"	TRIM_19
5	FL-37	12'-6"	TRIM_18
6	FL-22	12'-6"	TRIM_18
7	FL-24	10'-6"	TRIM_19

FLANGE BRACE TABLE
FRAME LINE 4

ID	MARK	LENGTH
1	FB32A	2'-8"

MEMBER TABLE
FRAME LINE 4

QTY	MARK	PART	LENGTH
1	EC-1	W12641	28'-7 5/8"
1	EC-4	W12641	28'-8 3/16"
1	EC-5	W12641	30'-2 3/16"
1	EC-6	W12641	29'-11 3/16"
1	EC-7	W12641	28'-7 5/8"
1	ER-3	W12651	14'-2"
1	ER-4	W12651	29'-4 9/16"
1	ER-5	W12651	17'-11 15/16"
1	ER-6	W12651	25'-6 5/8"
2	DJ-1	08X25C16	7'-3"
2	DJ-2	08X25C14	16'-6"
1	DH-1	08X25C16	9'-11 1/2"
2	G3-1	08X25Z16	13'-11 3/4"
1	G3-2	08X25Z16	14'-6 1/2"
2	G3-3	08X25Z16	14'-6 1/2"
1	G3-4	08X25Z16	20'-5 1/2"
1	G3-5	08X25Z16	20'-5 1/2"
1	G3-6	08X25Z14	20'-5 1/2"
1	G3-7	08X25Z14	7'-10 3/4"
1	G3-8	08X25Z16	7'-10 3/4"
5	G3-9	08X25Z12	31'-5 1/2"
5	G3-10	08X25Z12	29'-6 1/2"
1	ST-2	W08841	28'-11 3/4"
2	CB-3	0.88_ROD	33'-1 3/4"
1	CB-4	0.88_ROD	32'-0 3/4"
1	CB-5	0.88_ROD	32'-1 3/4"
1	SH-1	08X5X14	3'-3 1/2"

PROFESSIONAL ENGINEER
No. 10124637
PHILIP PERKINS
STATE OF UTAH

REVIEWED
By Philip Perkins at 9:26 am, Nov 15, 2024

GENERAL NOTES:

1. Sheets on buildings with roof slopes greater than 1-1/4"/12" must be field cut to cope with slope of roof.
2. Screw patterns for sheeting shall be to use 3ea screws at the bottom, top, and at each girt. Space these screws equally at about 1" off of each panel rib. Lap screws should be placed at bottom, top, each girt, two (2) equally spaced between base and first girt, and one (1) at the midpoint between all other girts. Tek5 Drillers are supplied as needed for non secondary steel.
3. Man doors are to be field located per customer and contractor shall install door frame stiffener angles on the back of each 'lock-side' of jambs at at approx. 3'-4' up on frames down to base angle (channel) at 30-45deg. Extra base angle supplied for contractor to field cut as needed.
4. All girts are bolted in place with (2) 1/2"x1-1/4" A307 bolts on a diagonal pattern at the clip and (2) 1/2"X1-1/4" A307 bolts at each end of the lap (6-bolts total per connection see detail drawings)
5. It is the responsibility of the erector to provide all temporary bracing and a plan for installing it. This includes size, type, location, and q'ty.

ISSUED FOR CONSTRUCTION

THESE DRAWINGS ARE SUBMITTED FOR CONSTRUCTION, AND ARE DEEMED TO BE FINAL DRAWINGS. IT IS THE CUSTOMER'S RESPONSIBILITY TO ENSURE THIS SET OF DRAWINGS ARE THE SOLE SET OF DRAWINGS IN THE HANDS OF THE ERECTOR AND OTHER PROFESSIONAL TRADES ON THE PROJECT SITE.

WESTERN STEEL BUILDINGS
PH: 435-565-6882
Fax: 435-503-9467

PROJECT: 90X80 SHOP	BLDG SIZE: 90.00' x 80.00' x 29.50'		JOB NUMBER
2010 RULON WHITE BLVD OGDEN, UT	DESIGN:	DRAWN: JLR	WSB37662
	DATE: 10/1/24	CHECK:	
CUSTOMER: KIMBERLY CLARK	SCALE: NONE	REV. NO:	DRAWING NUMBER
DWG NAME: ENDWALL FRAMING			SHEET 7 OF 15

BOLT TABLE FRAME LINE A				
LOCATION	QUAN	TYPE	DIA	LENGTH
Strut	4	A325	1/2"	1 1/4"

TRIM TABLE FRAME LINE A			
◇ID	MARK	LENGTH	DETAIL
	FL-240	20'-6"	TRIM_65

SPECIAL BOLTS						
◇ ID	QUAN	TYPE	DIA	LENGTH	WASH
1	4	A325	1/2"	1 1/4"	2
2	4	A325	1/2"	1 1/4"	0

1

MEMBER TABLE FRAME LINE A			
QTY	MARK	PART	LENGTH
1	E-1	12E14.1	26'-7 1/2"
1	E-2	12E14.1	26'-7 1/2"
1	E-3	12E14.1	26'-7 1/2"
1	G2-1	08X25Z12	29'-9 1/2"
3	G2-2	08X25Z14	29'-9 1/2"
1	G2-3	08X25Z16	29'-9 1/2"
1	G2-4	08X25Z14	32'-11 1/2"
4	G2-5	08X25Z16	32'-11 1/2"
1	G2-6	08X25Z12	29'-9 1/2"
3	G2-7	08X25Z14	29'-9 1/2"
1	G2-8	08X25Z16	29'-9 1/2"
2	ST-3	W08841	25'-7 7/8"
4	CB-6	1.00_ROD	30'-3 5/16"
4	CB-7	1.00_ROD	28'-5"

CONNECTION PLATES FRAME LINE A		
◻ID	QUAN	MARK/PART
1	2	k1

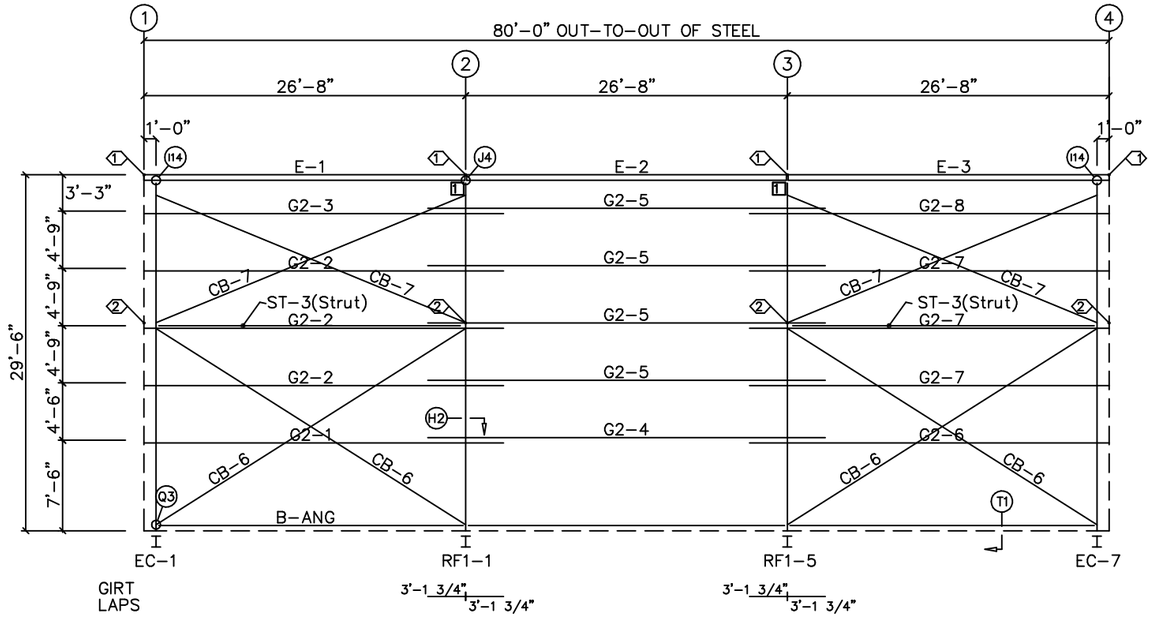

FRONT SIDEWALL FRAMING: FRAME LINE A

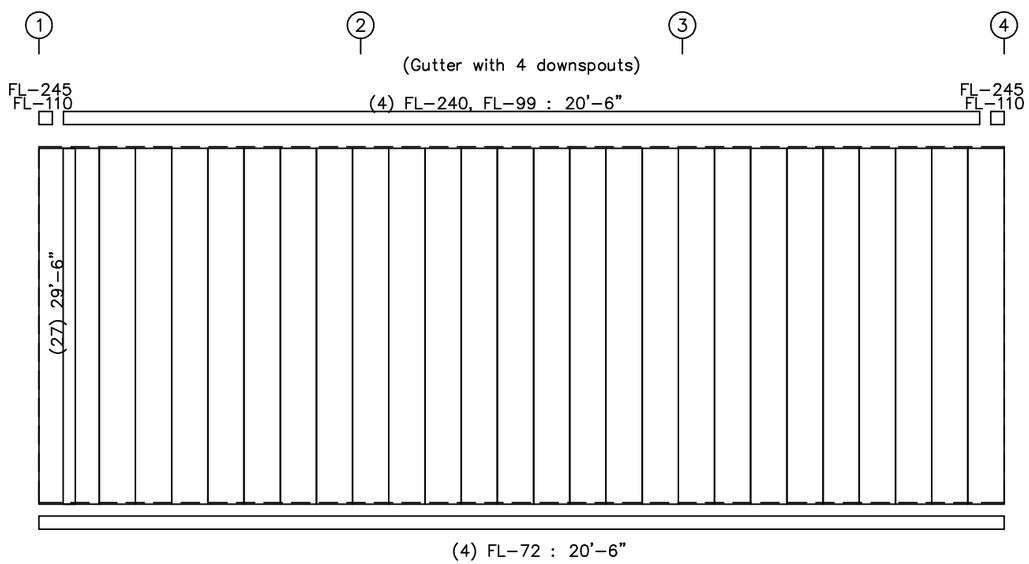

FRONT SIDEWALL SHEETING & TRIM: FRAME LINE A

PANELS: 26 Ga. PR – POLAR WHITE

PROFESSIONAL ENGINEER
No. 10124637
PHILIP PERKINS
STATE OF UTAH

REVIEWED
By Philip Perkins at 9:26 am, Nov 15, 2024

ISSUED FOR CONSTRUCTION

THESE DRAWINGS ARE SUBMITTED FOR CONSTRUCTION, AND ARE DEEMED TO BE FINAL DRAWINGS, IT IS THE CUSTOMER'S RESPONSIBILTY TO ENSURE THIS SET OF DRAWINGS ARE THE SOLE SET OF DRAWINGS IN THE HANDS OF THE ERECTOR AND OTHER PROFESSIONAL TRADES ON THE PROJECT SITE.

GENERAL NOTES:

1. Screw patterns for sheeting shall be to use 3ea screws at the bottom, top, and at each girt. Space these screws equally at about 1" off of each panel rib. Lap screws should be placed at bottom, top, each girt, two (2) equally spaced between base and first girt, and one (1) at the midpoint between all other girts. Tek5 Drillers are supplied as needed for non secondary steel.
2. Cut sheets as needed to cope to framed openings.
3. Man doors are to be field located per customer and contractor shall install door frame stiffener angles on the back of each 'lock-side' of jambs at approx. 3'-4' up on frames, down to the base angle (channel) at 30-45 deg. Extra base angle supplied for contractor to field cut as needed.
4. All girts are bolted in place with (2) 1/2"x1-1/4" A307 bolts on a diagonal pattern at the clip and (2) 1/2"X1-1/4" A307 bolts at each end of the lap (6-bolts total per connection see detail drawings)
5. It is the erectors responsibility to provide all temporary bracing and a plan for installing it. This includes sizes, types, location and quantity.

WESTERN STEEL BUILDINGS
PH: 435-565-6882
Fax: 435-503-9467

PROJECT: 90X80 SHOP	BLDG SIZE: 90.00' x 80.00' x 29.50'		JOB NUMBER
2010 RULON WHITE BLVD OGDEN, UT	DESIGN:	DRAWN: JLR	WSB37662
	DATE: 11/4/24	CHECK:	
CUSTOMER: KIMBERLY CLARK	SCALE: NONE	REV. NO: 1	DRAWING NUMBER
DWG NAME: SIDEWALL FRAMING			SHEET 8 OF 15

BOLT TABLE FRAME LINE G				
LOCATION	QUAN	TYPE	DIA	LENGTH
Strut	4	A325	1/2"	1 1/4"

TRIM TABLE FRAME LINE G			
◇ID	MARK	LENGTH	DETAIL
	FL-240	20'-6"	TRIM_65

SPECIAL BOLTS						
◇ ID	QUAN	TYPE	DIA	LENGTH	WASH
1	4	A325	1/2"	1 1/4"	2
2	4	A325	1/2"	1 1/4"	0

1

MEMBER TABLE FRAME LINE G			
QTY	MARK	PART	LENGTH
1	E-1	12E14.1	26'-7 1/2"
1	E-2	12E14.1	26'-7 1/2"
1	E-3	12E14.1	26'-7 1/2"
1	G4-1	08X25Z12	29'-9 1/2"
3	G4-2	08X25Z14	29'-9 1/2"
1	G4-3	08X25Z16	29'-9 1/2"
1	G4-4	08X25Z14	32'-11 1/2"
4	G4-5	08X25Z16	32'-11 1/2"
1	G4-6	08X25Z12	29'-9 1/2"
3	G4-7	08X25Z14	29'-9 1/2"
1	G4-8	08X25Z16	29'-9 1/2"
2	ST-3	W08841	25'-7 7/8"
4	CB-6	1.00_ROD	30'-3 5/16"
4	CB-7	1.00_ROD	28'-5"

CONNECTION PLATES FRAME LINE G		
☐ID	QUAN	MARK/PART
1	2	k1

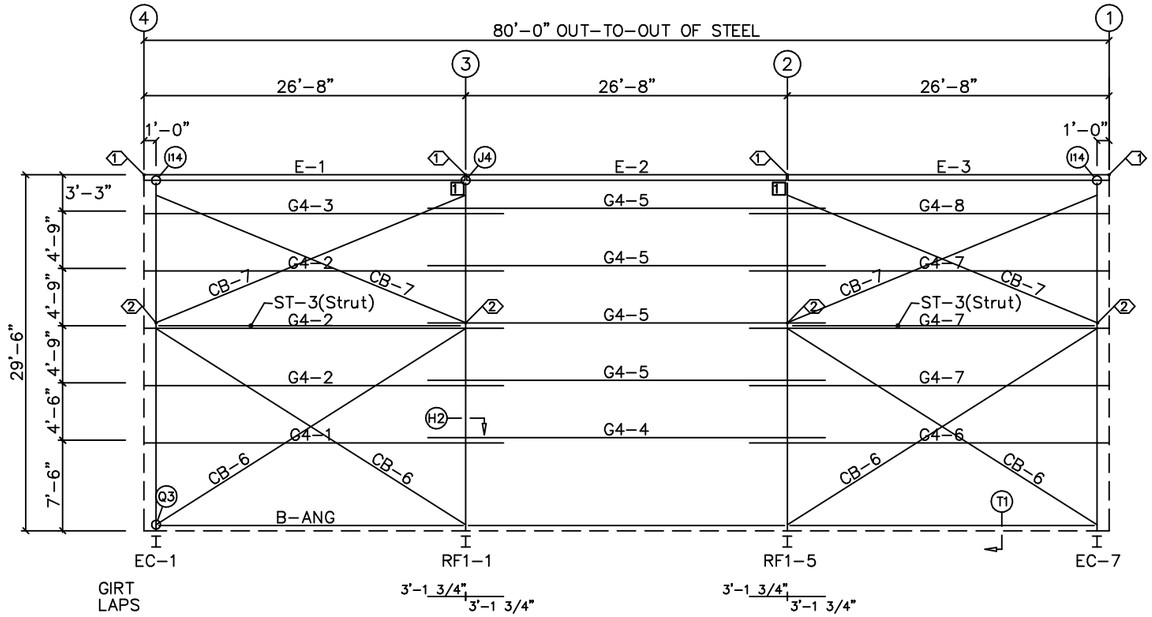

BACK SIDEWALL FRAMING: FRAME LINE G

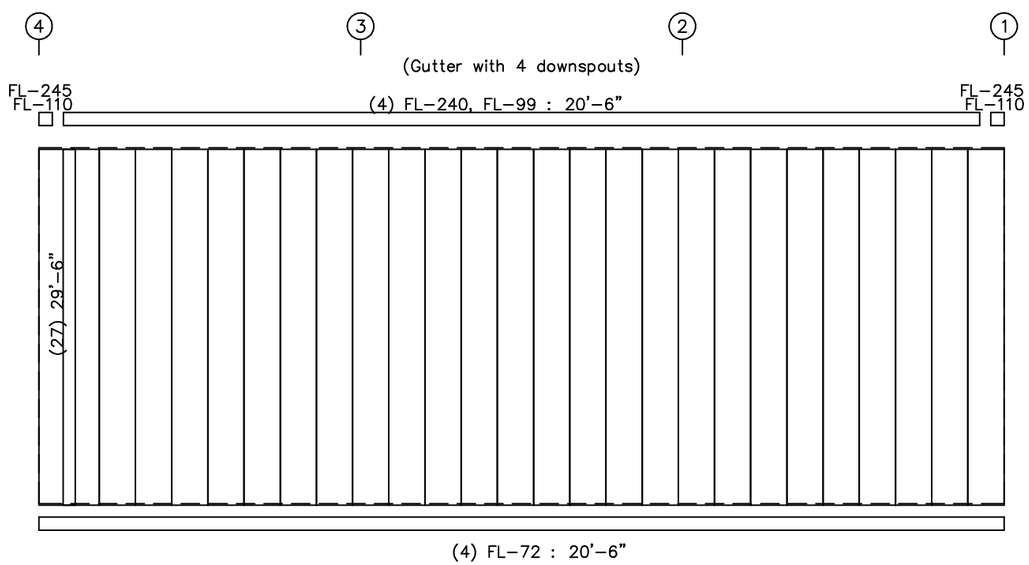

BACK SIDEWALL SHEETING & TRIM: FRAME LINE G

PANELS: 26 Ga. PR – POLAR WHITE

PROFESSIONAL ENGINEER
No. 10124637
PHILIP PERKINS
STATE OF UTAH

REVIEWED
By Philip Perkins at 9:26 am, Nov 15, 2024

ISSUED FOR CONSTRUCTION

THESE DRAWINGS ARE SUBMITTED FOR CONSTRUCTION, AND ARE DEEMED TO BE FINAL DRAWINGS, IT IS THE CUSTOMER'S RESPONSIBILTY TO ENSURE THIS SET OF DRAWINGS ARE THE SOLE SET OF DRAWINGS IN THE HANDS OF THE ERECTOR AND OTHER PROFESSIONAL TRADES ON THE PROJECT SITE.

GENERAL NOTES:

1. Screw patterns for sheeting shall be to use 3ea screws at the bottom, top, and at each girt. Space these screws equally at about 1" off of each panel rib. Lap screws should be placed at bottom, top, each girt, two (2) equally spaced between base and first girt, and one (1) at the midpoint between all other girts. Tek5 Drillers are supplied as needed for non secondary steel.
2. Cut sheets as needed to cope to framed openings.
3. Man doors are to be field located per customer and contractor shall install door frame stiffener angles on the back of each 'lock-side' of jambs at approx. 3'-4' up on frames, down to the base angle (channel) at 30-45 deg. Extra base angle supplied for contractor to field cut as needed.
4. All girts are bolted in place with (2) 1/2"x1-1/4" A307 bolts on a diagonal pattern at the clip and (2) 1/2"X1-1/4" A307 bolts at each end of the lap (6-bolts total per connection see detail drawings)
5. It is the erectors responsibility to provide all temporary bracing and a plan for installing it. This includes sizes, types, location and quantity.

WESTERN STEEL BUILDINGS
PH: 435-565-6882
Fax: 435-503-9467

PROJECT: 90X80 SHOP	BLDG SIZE: 90.00' x 80.00' x 29.50'		JOB NUMBER
2010 RULON WHITE BLVD OGDEN, UT	DESIGN:	DRAWN: JLR	WSB37662
	DATE: 11/4/24	CHECK:	
CUSTOMER: KIMBERLY CLARK	SCALE: NONE	REV. NO: 1	DRAWING NUMBER
DWG NAME: SIDEWALL FRAMING			SHEET 9 OF 15

SPLICE BOLT TABLE						
Mark	Qty Top	Bot	Int	Type	Dia	Length
SP-1	8	4	6	A325	1"	3 1/2"
SP-2	4	4	2	A325	3/4"	2 1/4"
SP-3	4	4	4	A325	1"	2 1/2"

▽FLANGE BRACES: (1) One Side; (2) Two Sides
FBxxA(1): xx=length(in)
A – L2X2X12g

ISSUED FOR CONSTRUCTION

THESE DRAWINGS ARE SUBMITTED FOR CONSTRUCTION, AND ARE DEEMED TO BE FINAL DRAWINGS. IT IS THE CUSTOMER'S RESPONSIBILTY TO ENSURE THIS SET OF DRAWINGS ARE THE SOLE SET OF DRAWINGS IN THE HANDS OF THE ERECTOR AND OTHER PROFESSIONAL TRADES ON THE PROJECT SITE.

MEMBER TABLE					
Mark	Web Depth Start/End	Web Plate Thick	Web Plate Length	Outside Flange W x Thk x Length	Inside Flange W x Thk x Length
RF1-1	12.0/29.3	0.313	106.7	8 x 3/8" x 341.6	8 x 3/8" x 299.5
	29.3/60.0	0.313	240.0	8 x 1/2" x 68.6	
RF1-2	47.0/23.1	0.250	233.3	8 x 1/2" x 229.3	8 x 1/2" x 234.5
RF1-3	23.0/31.0	0.250	240.0	8 x 3/8" x 240.0	8 x 3/8" x 237.5

CONNECTION PLATES	
☐ ID	Mark/Part
1	k12

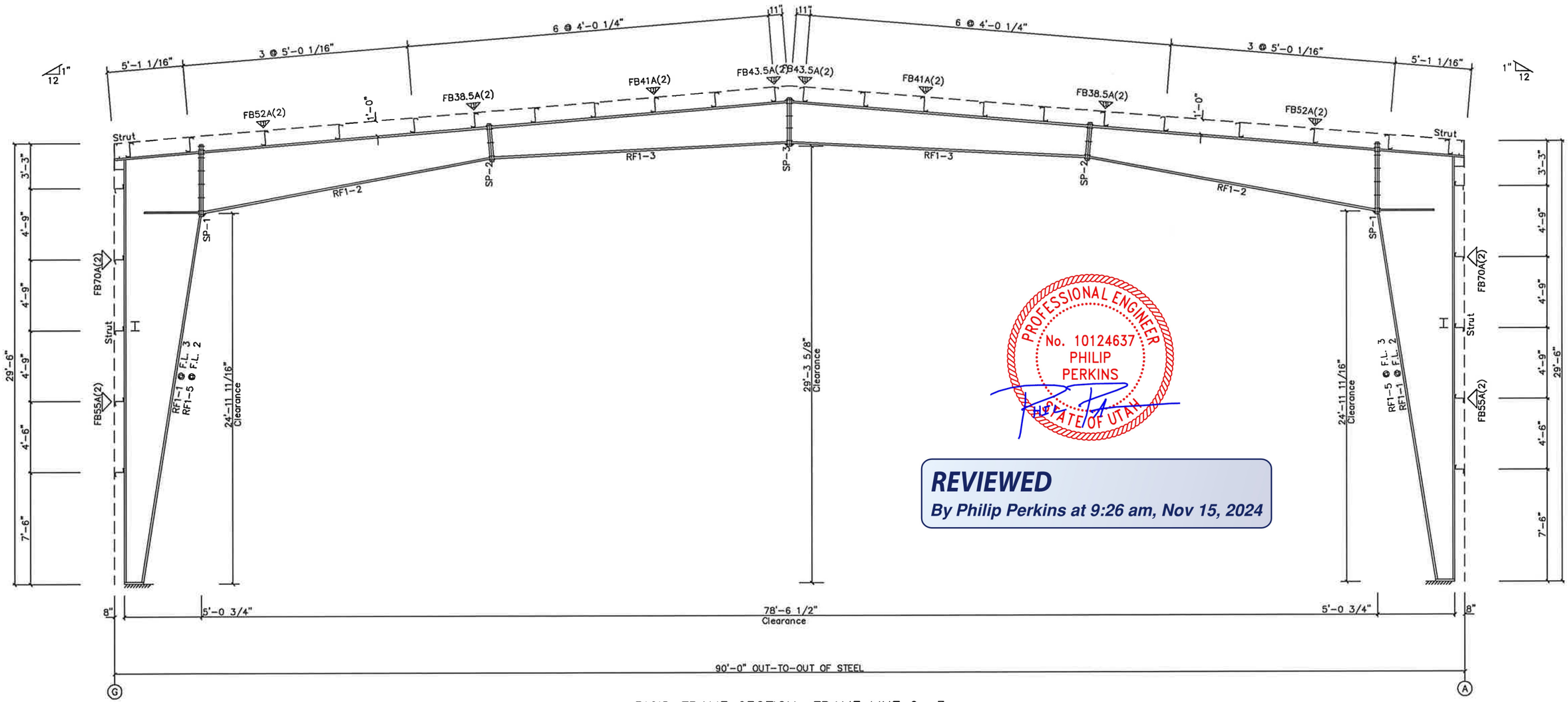

RIGID FRAME SECTION: FRAME LINE 2 3

PROFESSIONAL ENGINEER
No. 10124637
PHILIP PERKINS
STATE OF UTAH

REVIEWED
By Philip Perkins at 9:26 am, Nov 15, 2024

GENERAL NOTES:

1. ALL PRIMARY STRUCTURAL STEEL SHALL BE FABRICATED FROM 50 KSI STEEL.
2. ALL SECONDARY FRAMING MEMBERS SHALL BE FORMED FROM 55 KSI STEEL.
3. ALL FIELD CONNECTIONS OF PRIMARY FRAMING MEMBERS SHALL BE BOLTED. WITH A325 H. S. BOLTS AND INSTALLED BY THE 'TURN OF THE NUT' METHOD.
4. ALL FIELD CONNECTIONS OF SECONDARY FRAMING SHALL BE BOLTED WITH A307 MACHINE BOLTS (or A325).
5. WELDING PROCESSES USED BY MANUFACTURER ARE IN ACCORDANCE WITH SEC. 1.3 OF AWS D 1.1
6. IT IS THE RESPONSIBILITY OF THE ERECTOR TO PROVIDE FOR ALL TEMPORARY BRACING AS WELL AS A PLAN FOR INSTALLING AND SECURING IT. THIS INCLUDES SIZES, TYPES, LOCATION, AND QUANTITIES. RIGID FRAMES SHOULD NEVER BE LEFT IN AN UNSUPPORTED, UNBRACED OR UNGUYED CONDITION. ADDITIONAL CARE SHOULD BE TAKEN WHEN ERECTING MULTI-SPAN FRAMES COMPARED TO CLEAR SPAN FRAMES BECAUSE OF THE LIGHTER SECTIONS THAT CAN BE UTILIZED DUE TO CLOSER SUPPORT SPACINGS.

WESTERN STEEL BUILDINGS
PH: 435-565-6882
Fax: 435-503-9467

PROJECT: 90X80 SHOP	BLDG SIZE: 90.00' x 80.00' x 29.50'		JOB NUMBER
2010 RULON WHITE BLVD OGDEN, UT	DESIGN:	DRAWN: JLR	WSB37662
	DATE: 10/1/24	CHECK:	
CUSTOMER: KIMBERLY CLARK	SCALE: NONE	REV. NO:	DRAWING NUMBER
DWG NAME: RIGID FRAME ELEVATION			SHEET 10 OF 15

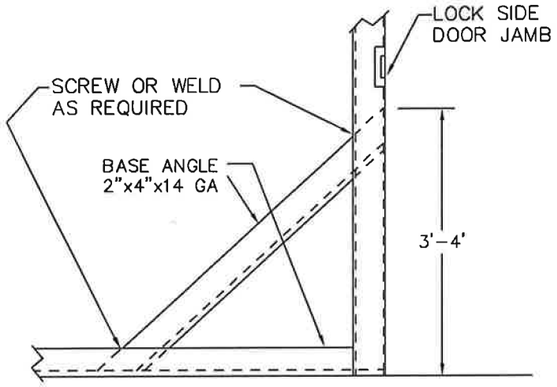

K11 MANDOOR JAMB BRACE ANGLE

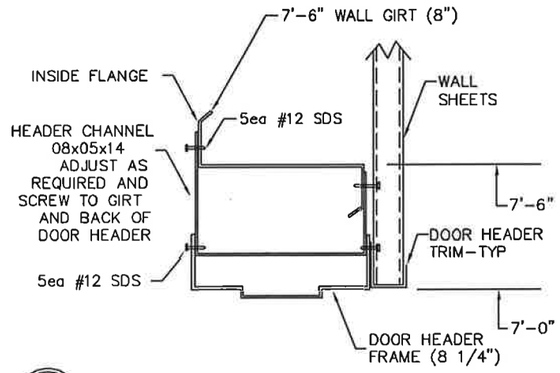

K12 3070 DOOR FRAME CONNECTION TO 7'-6" WALL GIRT-TYP

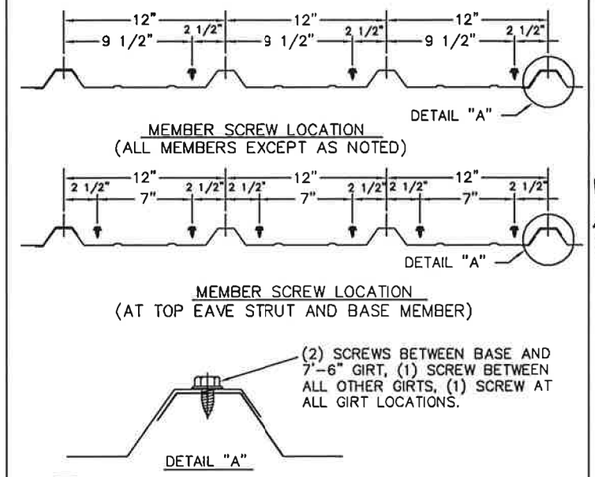

Z2 "R" PANEL WALL

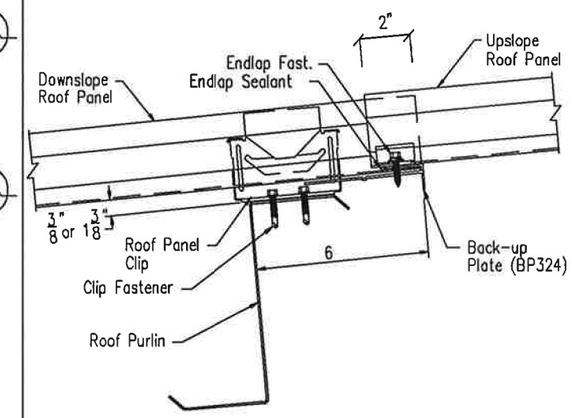

Z8 TSS-324 LAP DETAILS

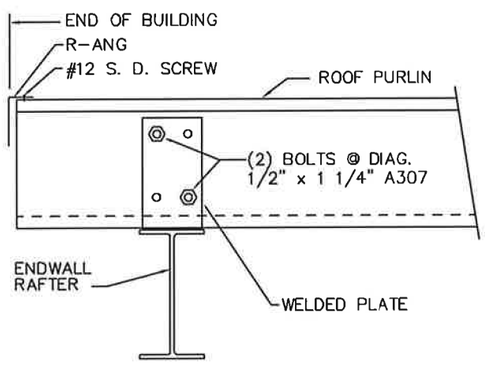

A7 SECTION THRU ENDWALL RAFTER

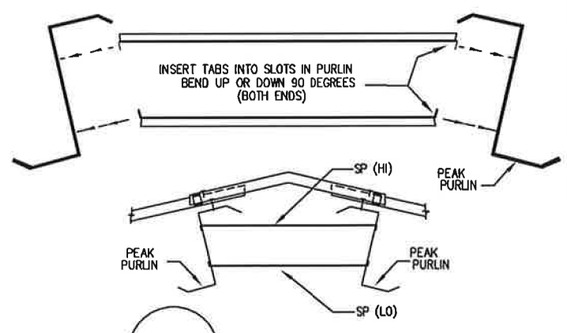

AN-10 PEAK STABILIZER

INSTALLATION NOTE:
INSTALL STABILIZERS AS SHOWN ON SSR ROOF
INSTALL BOTTOM ROW ONLY ON PBR ROOF

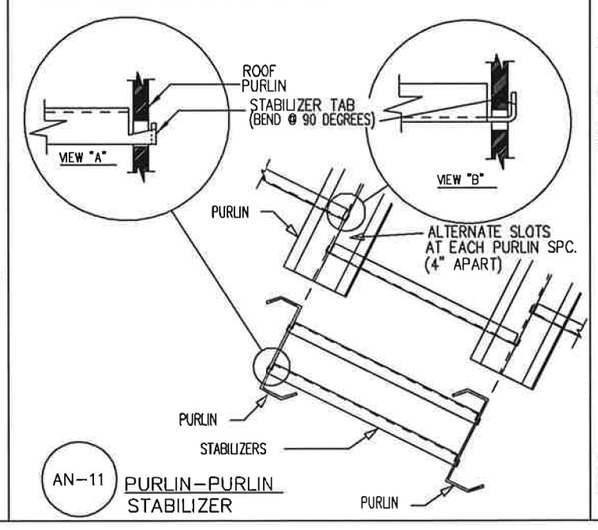

AN-11 PURLIN-PURLIN STABILIZER

INSTALLATION NOTE:
INSTALLED AS SHOWN ON SSR ROOF
INSTALL ON BOTTOM ONLY ON PBR ROOF
(ONE) RUN - 4" APART

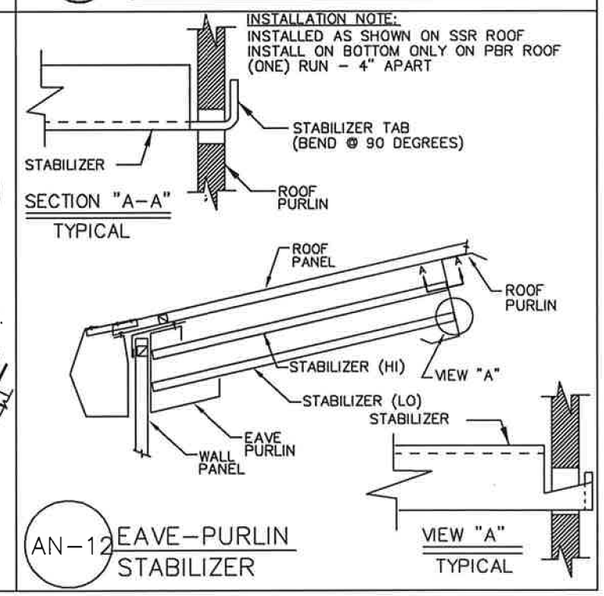

AN-12 EAVE-PURLIN STABILIZER

PROFESSIONAL ENGINEER
No. 10124637
PHILIP PERKINS
STATE OF UTAH

REVIEWED
By Philip Perkins at 9:26 am, Nov 15, 2024

ISSUED FOR CONSTRUCTION

THESE DRAWINGS ARE SUBMITTED FOR CONSTRUCTION, AND ARE DEEMED TO BE FINAL DRAWINGS. IT IS THE CUSTOMER'S RESPONSIBILITY TO ENSURE THIS SET OF DRAWINGS ARE THE SOLE SET OF DRAWINGS IN THE HANDS OF THE ERECTOR AND OTHER PROFESSIONAL TRADES ON THE PROJECT SITE.

WESTERN STEEL BUILDINGS
PH: 435-565-6882
Fax: 435-503-9467

PROJECT: 90X80 SHOP	BLDG SIZE: 90.00' x 80.00' x 29.50'		JOB NUMBER
2010 RULON WHITE BLVD OGDEN, UT	DESIGN:	DRAWN: JLR	WSB37662
	DATE: 10/1/24	CHECK:	
CUSTOMER: KIMBERLY CLARK	SCALE: NONE	REV. NO:	DRAWING NUMBER
DWG NAME: DETAIL DRAWINGS			SHEET 11 OF 15

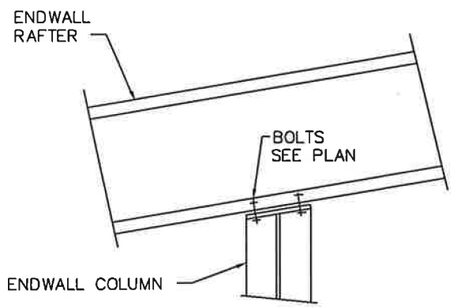

B3 ENDWALL RAFTER TO COLUMN

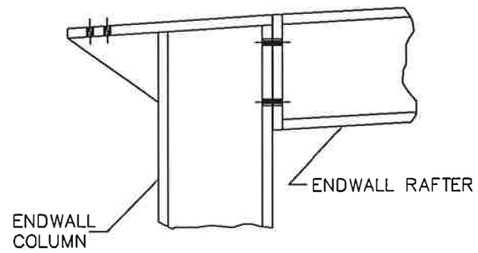

SEE ERECTION DRAWINGS FOR BOLT SIZE.

B24 CORNER COLUMN TO ENDWALL RAFTER

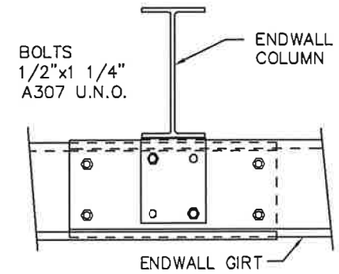

NOTE: FLANGE BRACES MAY BE PRESENT

C12 ENDWALL COLUMN TO WALL GIRT

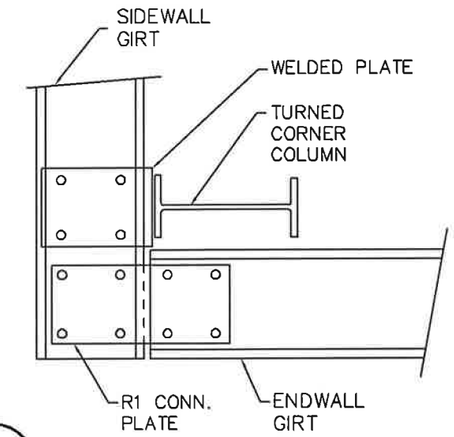

D18 CORNER COLUMN TO WALL GIRT

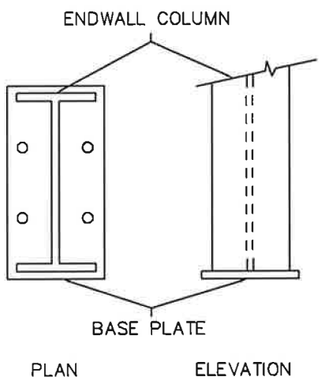

E3 BASE PLATE FOR ENDWALL COLUMN

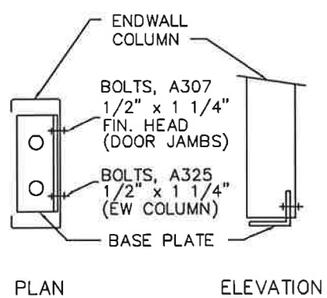

E6 BASE PLATE FOR ENDWALL COLUMN OR DOOR JAMB

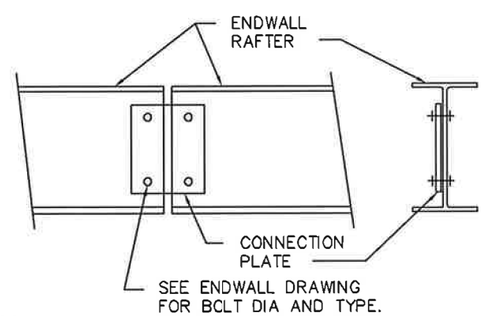

F3 RAFTER SPLICE ALONG SURFACE

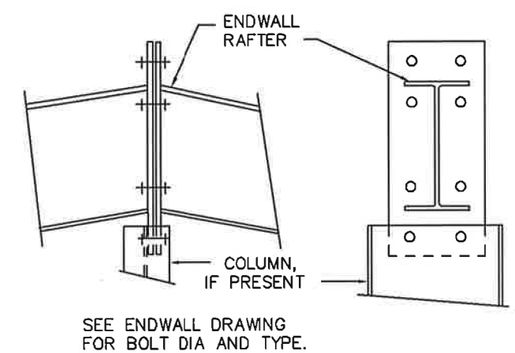

SEE ENDWALL DRAWING
FOR BOLT DIA AND TYPE.

F12 RAFTER SPLICE AT SURFACE CHANGE

PROFESSIONAL ENGINEER
No. 10124637
PHILIP PERKINS
STATE OF UTAH

REVIEWED
By Philip Perkins at 9:26 am, Nov 15, 2024

ISSUED FOR CONSTRUCTION

THESE DRAWINGS ARE SUBMITTED FOR CONSTRUCTION, AND ARE DEEMED TO BE FINAL DRAWINGS, IT IS THE CUSTOMER'S RESPONSIBILITY TO ENSURE THIS SET OF DRAWINGS ARE THE SOLE SET OF DRAWINGS IN THE HANDS OF THE ERECTOR AND OTHER PROFESSIONAL TRADES ON THE PROJECT SITE.

WESTERN STEEL BUILDINGS
PH: 435-565-6882
Fax: 435-503-9467

PROJECT: 90X80 SHOP	BLDG SIZE: 90.00' x 80.00' x 29.50'		JOB NUMBER
2010 RULON WHITE BLVD OGDEN, UT	DESIGN:	DRAWN: JLR	WSB37662
	DATE: 10/1/24	CHECK:	
CUSTOMER: KIMBERLY CLARK	SCALE: NONE	REV. NO:	DRAWING NUMBER
DWG NAME: DETAIL DRAWINGS			SHEET 12 OF 15

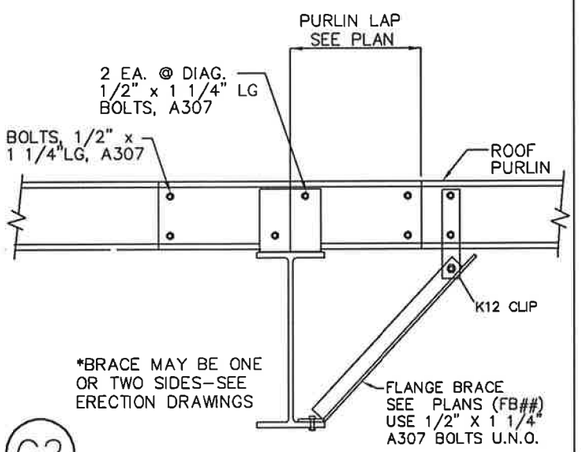

G2 ROOF PURLIN TO INTERIOR FRAME RAFTER

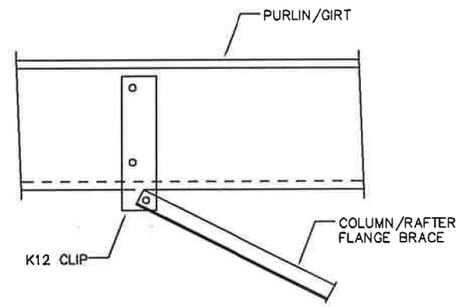

G25 FLANGE BRACE TO PURLIN/GIRT CLIP

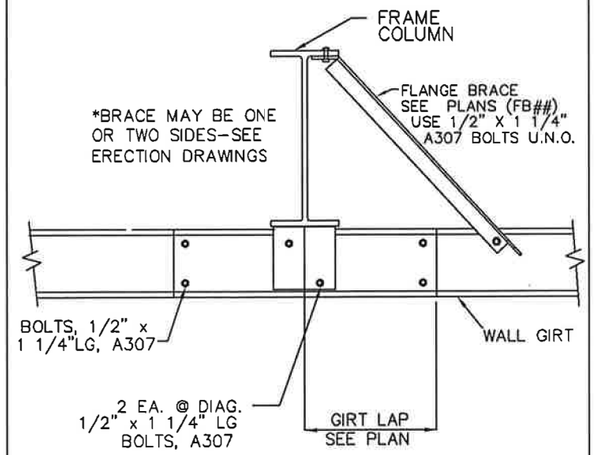

H2 WALL GIRT TO FRAME COLUMN

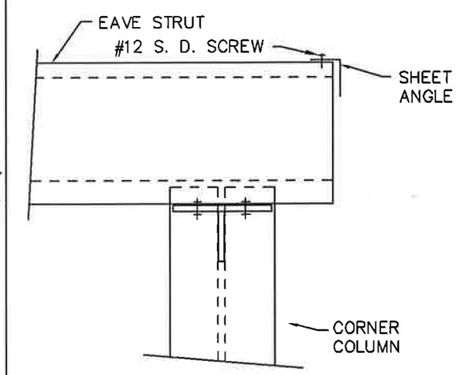

I14 EAVE STRUT TO CORNER COLUMN

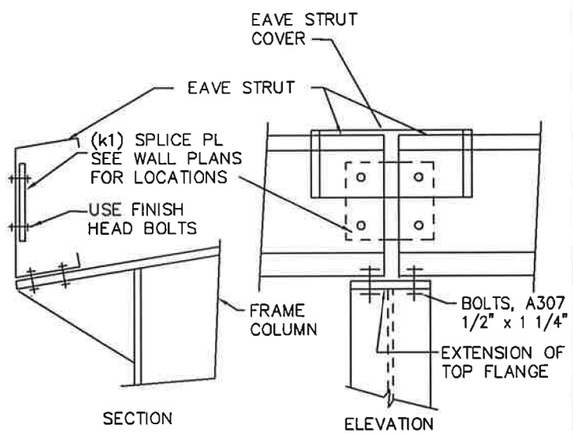

J4 EAVE STRUT TO RIGID FRAME

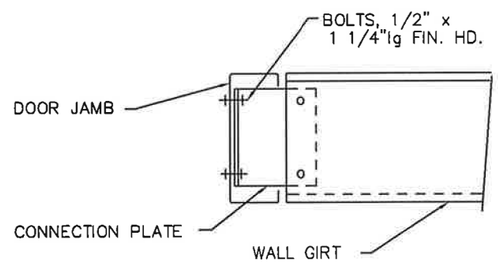

K2 WALL GIRT TO DOOR JAMB

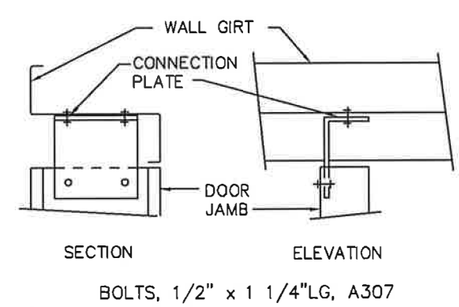

L6 DOOR JAMB TO WALL GIRT

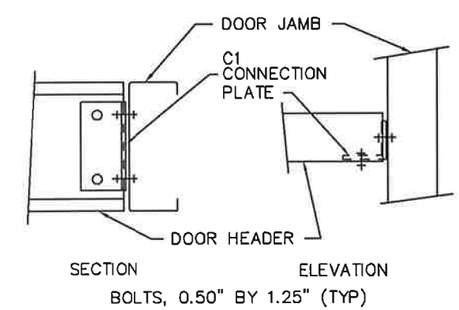

M1 DOOR HEADER TO DOOR JAMB

PROFESSIONAL ENGINEER
No. 10124637
PHILIP
PERKINS
STATE OF UTAH

REVIEWED
By Philip Perkins at 9:26 am, Nov 15, 2024

ISSUED FOR CONSTRUCTION

THESE DRAWINGS ARE SUBMITTED FOR CONSTRUCTION, AND ARE DEEMED TO BE FINAL DRAWINGS. IT IS THE CUSTOMER'S RESPONSIBILITY TO ENSURE THIS SET OF DRAWINGS ARE THE SOLE SET OF DRAWINGS IN THE HANDS OF THE ERECTOR AND OTHER PROFESSIONAL TRADES ON THE PROJECT SITE.

WESTERN STEEL BUILDINGS
PH: 435-565-6882
Fax: 435-503-9467

PROJECT: 90X80 SHOP	BLDG SIZE: 90.00' x 80.00' x 29.50'		JOB NUMBER
2010 RULON WHITE BLVD OGDEN, UT	DESIGN:	DRAWN: JLR	WSB37662
	DATE: 10/1/24	CHECK:	
CUSTOMER: KIMBERLY CLARK	SCALE: NONE	REV. NO:	DRAWING NUMBER
DWG NAME: DETAIL DRAWINGS			SHEET 13 OF 15

NOTE:
FLUSH GIRT SYSTEMS WILL REQUIRE A SLOT BE FIELD CUT IN THE GIRT WEB TO ALLOW CABLE TO FREELY PASS THROUGH. SLOT SIZE TO BE MINIMAL SIZE TO ACCOMODATE BRACING.

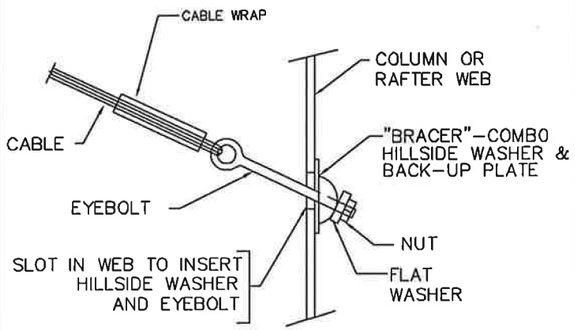

Q2 DIAGONAL CABLE, EYEBOLT END

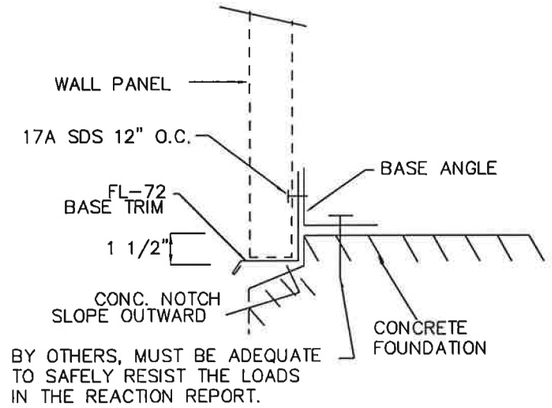

T1 SECTION THRU WALL PANEL AND CONCRETE FOUNDATION

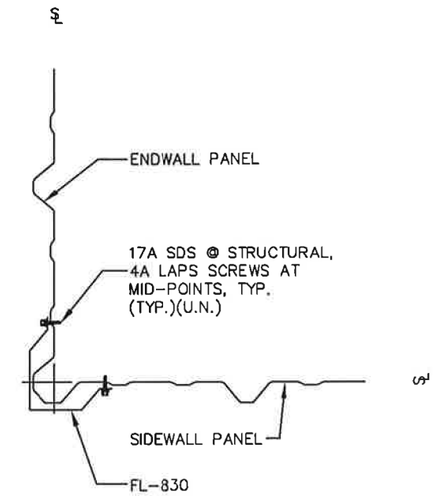

TR-12 OS CORNER TRIM SECTION

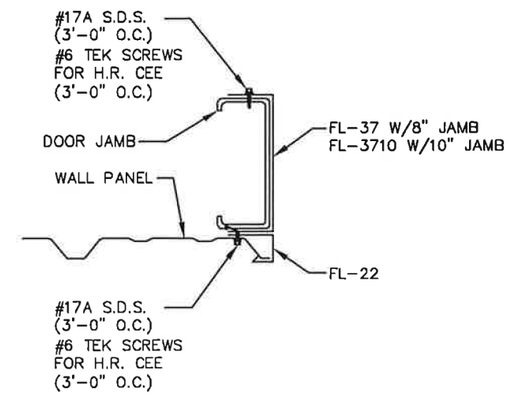

TR_18 DOOR JAMB TRIM

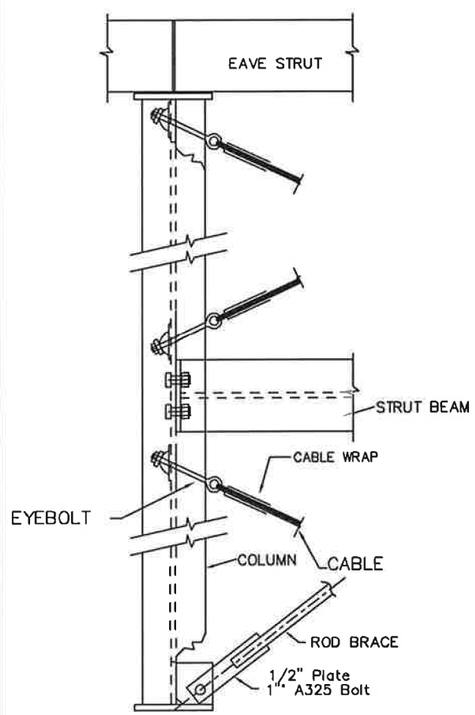

Q3 ROD BRACE ATTACHMENT

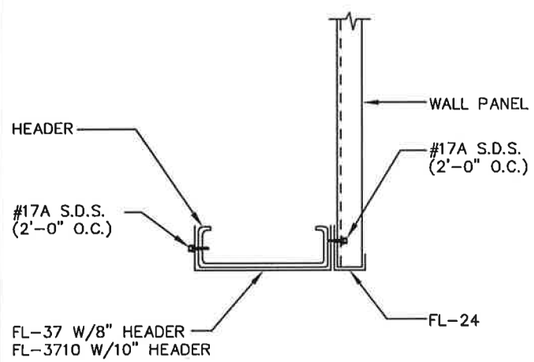

TR_19 HEADER TRIM

PROFESSIONAL ENGINEER
No. 10124637
PHILIP PERKINS
STATE OF UTAH

REVIEWED
By Philip Perkins at 9:26 am, Nov 15, 2024

ISSUED FOR CONSTRUCTION

THESE DRAWINGS ARE SUBMITTED FOR CONSTRUCTION, AND ARE DEEMED TO BE FINAL DRAWINGS. IT IS THE CUSTOMER'S RESPONSIBILITY TO ENSURE THIS SET OF DRAWINGS ARE THE SOLE SET OF DRAWINGS IN THE HANDS OF THE ERECTOR AND OTHER PROFESSIONAL TRADES ON THE PROJECT SITE.

WESTERN STEEL BUILDINGS
PH: 435-565-6882
Fax: 435-503-9467

PROJECT: 90X80 SHOP	BLDG SIZE: 90.00' x 80.00' x 29.50'		JOB NUMBER
2010 RULON WHITE BLVD OGDEN, UT	DESIGN:	DRAWN: JLR	WSB37662
	DATE: 10/1/24	CHECK:	
CUSTOMER: KIMBERLY CLARK	SCALE: NONE	REV. NO:	DRAWING NUMBER
DWG NAME: DETAIL DRAWINGS			SHEET 14 OF 15

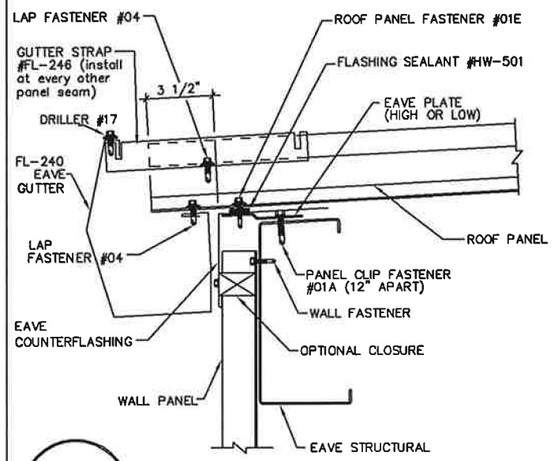

TR-65 TSS-324 ROOF PANEL EAVE SECTION GUTTER DETAILS

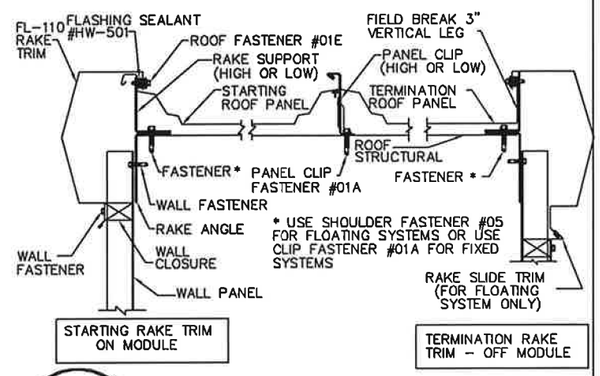

TR-46 TSS-324 GABLE DETAILS

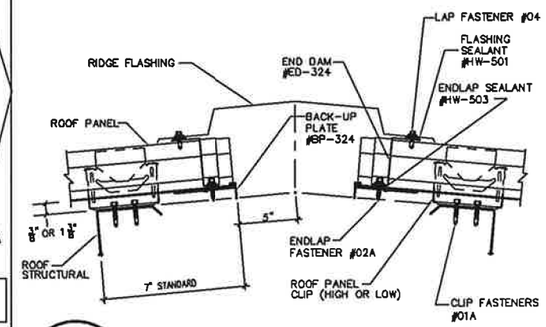

TR-50 TSS-324 RIDGE DETAILS

PROFESSIONAL ENGINEER
No. 10124637
PHILIP PERKINS
STATE OF UTAH

REVIEWED
By Philip Perkins at 9:26 am, Nov 15, 2024

ISSUED FOR CONSTRUCTION

THESE DRAWINGS ARE SUBMITTED FOR CONSTRUCTION, AND ARE DEEMED TO BE FINAL DRAWINGS. IT IS THE CUSTOMER'S RESPONSIBILTY TO ENSURE THIS SET OF DRAWINGS ARE THE SOLE SET OF DRAWINGS IN THE HANDS OF THE ERECTOR AND OTHER PROFESSIONAL TRADES ON THE PROJECT SITE.

WESTERN STEEL BUILDINGS
PH: 435-565-6882
Fax: 435-503-9467

PROJECT: 90X80 SHOP	BLDG SIZE: 90.00' x 80.00' x 29.50'		JOB NUMBER
2010 RULON WHITE BLVD OGDEN, UT	DESIGN:	DRAWN: JLR	WSB37662
	DATE: 10/1/24	CHECK:	
CUSTOMER: KIMBERLY CLARK	SCALE: NONE	REV. NO:	DRAWING NUMBER
DWG NAME: DETAIL DRAWINGS			SHEET 15 OF 15

KEYED NOTES

02.23 EXISTING RAMP CURBS TO REMAIN, PROTECT IN PLACE
02.65 REMOVE EXISTING RAILING
02.72 REMOVE EXISTING DRIVEWAY SLAB, EXISTING CONCRETE CURBS TO REMAIN

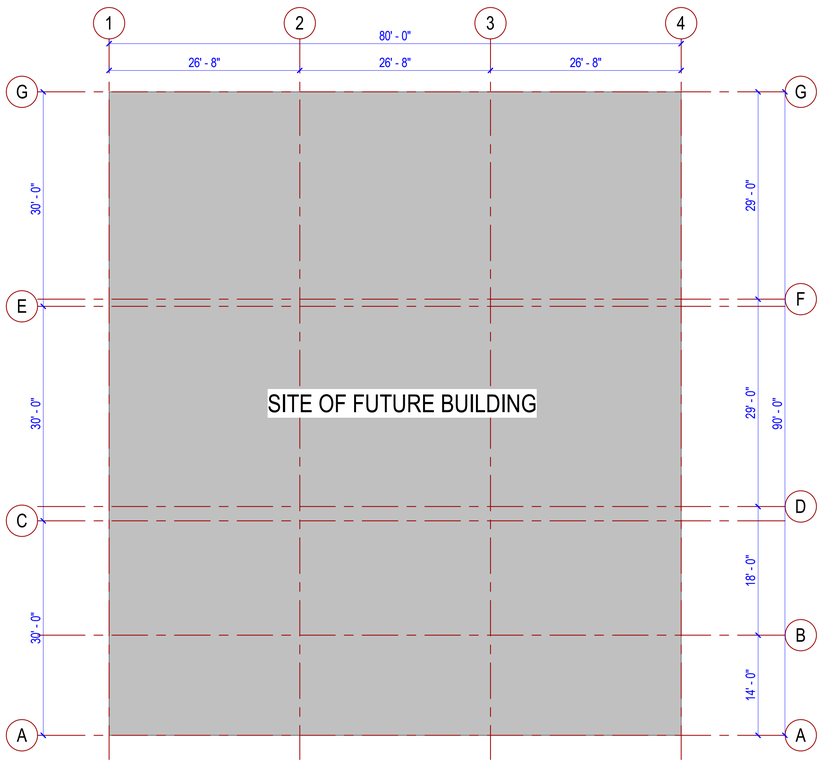

1 ARCHITECTURAL SITE DEMOLITION PLAN
1" = 10'-0"

0' 5' 10' 20' 40'
GRAPHIC SCALE 1" = 10'-0"

STATE OF UTAH
TRAVIS R. POLL
LICENSED ARCHITECT
08 OCT 2024

EA SOLUTIONS
324 S. State Street, Suite 444
Salt Lake City, UT 84111
www.easolutions.us
385-549-8800

Rev.	Revision 1	Date	Appr.
1	Description	10/23/24	

Designed by: Designer
Drawn by: CJK
Reviewed by: TRP
Submitted by: TRP
Submitted: 08 OCT 2024
File:
Scale: 1" = 10'-0"
Project Number: EA24022TP
REV: 1

KCC STORES WAREHOUSE

2010 N. RULON WHITE BLVD.
FARR WEST, UT 84404
PERMIT SUBMITTAL

ARCHITECTURAL SITE DEMOLITION PLAN

SHEET NUMBER
AD100

PLOT DATE: 11/20/2024 2:35:40 PM

PERMIT SUBMITTAL

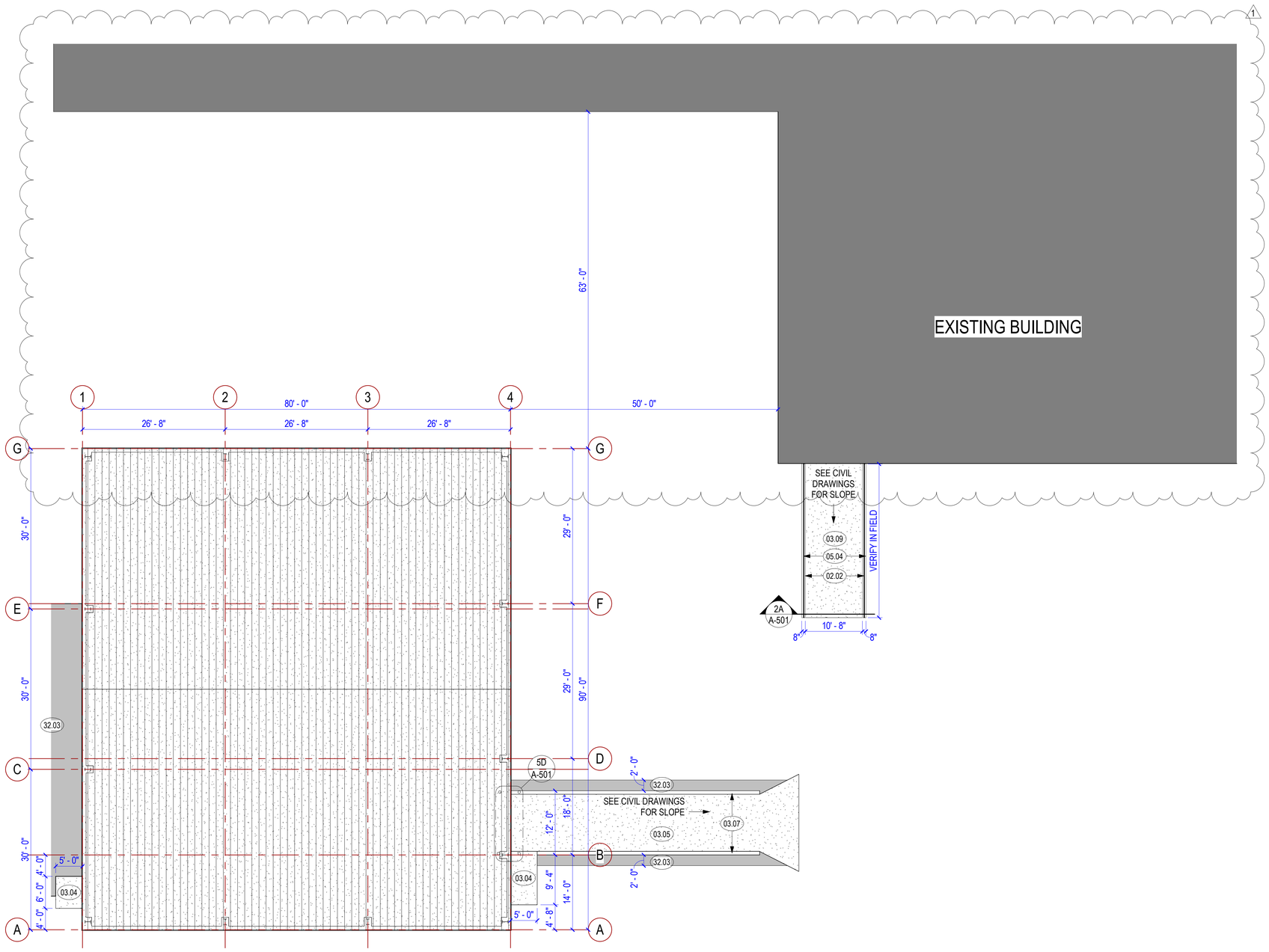

1 ARCHITECTURAL SITE PLAN
1" = 10'-0"

NORTH

KEYED NOTES

02.02 EXISTING WALL TO REMAIN
03.04 CONCRETE STOOP, SEE CIVIL AND STRUCTURAL DRAWINGS
03.05 CONCRETE DRIVEWAY/RAMP, SEE CIVIL AND STRUCTURAL DRAWINGS
03.07 CONCRETE CURBING, 8" THICK AND 6" ABOVE ENTIRE RAMP, FOLLOWING RAMP SLOPE
03.09 NEW CONCRETE DRIVEWAY ON EXISTING CONCRETE CURBING, SEE CIVIL PLANS, 1
05.04 OSHA APPROVED 42 INCH HIGH GUARDS SHALL BE LOCATED ALONG OPEN-SIDED WALKING SURFACES, INCLUDING MEZZANINES, EQUIPMENT PLATFORMS, AISLES, STAIRS, RAMPS AND LANDINGS THAT ARE LOCATED MORE THAN 30 INCHES MEASURES VERTICALLY TO THE FLOOR OR GRADE BELOW AT A POINT WITHIN 36 INCHES HORIZONTALLY TO THE EDGE OF THE OPEN SIDE. THE HIGHT OF THE GUARD SHALL BE MEASURED VERTICALLY FROM THE RAMP SURFACE AT THE GUARD ON RAMPS
32.03 LANDSCAPE FABRIC AND ROCK MULCH, SEE CIVIL DRAWINGS

STATE OF UTAH
TRAVIS R. POSPISIL
LICENSED ARCHITECT
08 OCT 2024

EA SOLUTIONS
324 S. State Street, Suite 444
Salt Lake City, UT 84111
www.easolutions.us
385-549-8800

Rev.	Revision 1	Description	Date	Appr.
1			10/23/24	

Designed by: Designer	Submitted: 08 OCT 2024	REV: 1	
Drawn by: CJK	File:		
Reviewed by: TRP	Scale: 1" = 10'-0"		
Submitted by: TRP	Project Number: EA24023TP		

KCC STORES WAREHOUSE

2010 N. RULON WHITE BLVD.
FARR WEST, UT 84404
PERMIT SUBMITTAL

ARCHITECTURAL SITE PLAN

SHEET NUMBER
A-100

0' 5' 10' 20' 40'
GRAPHIC SCALE 1" = 10'-0"

PLOT DATE: 11/20/2024 2:35:41 PM

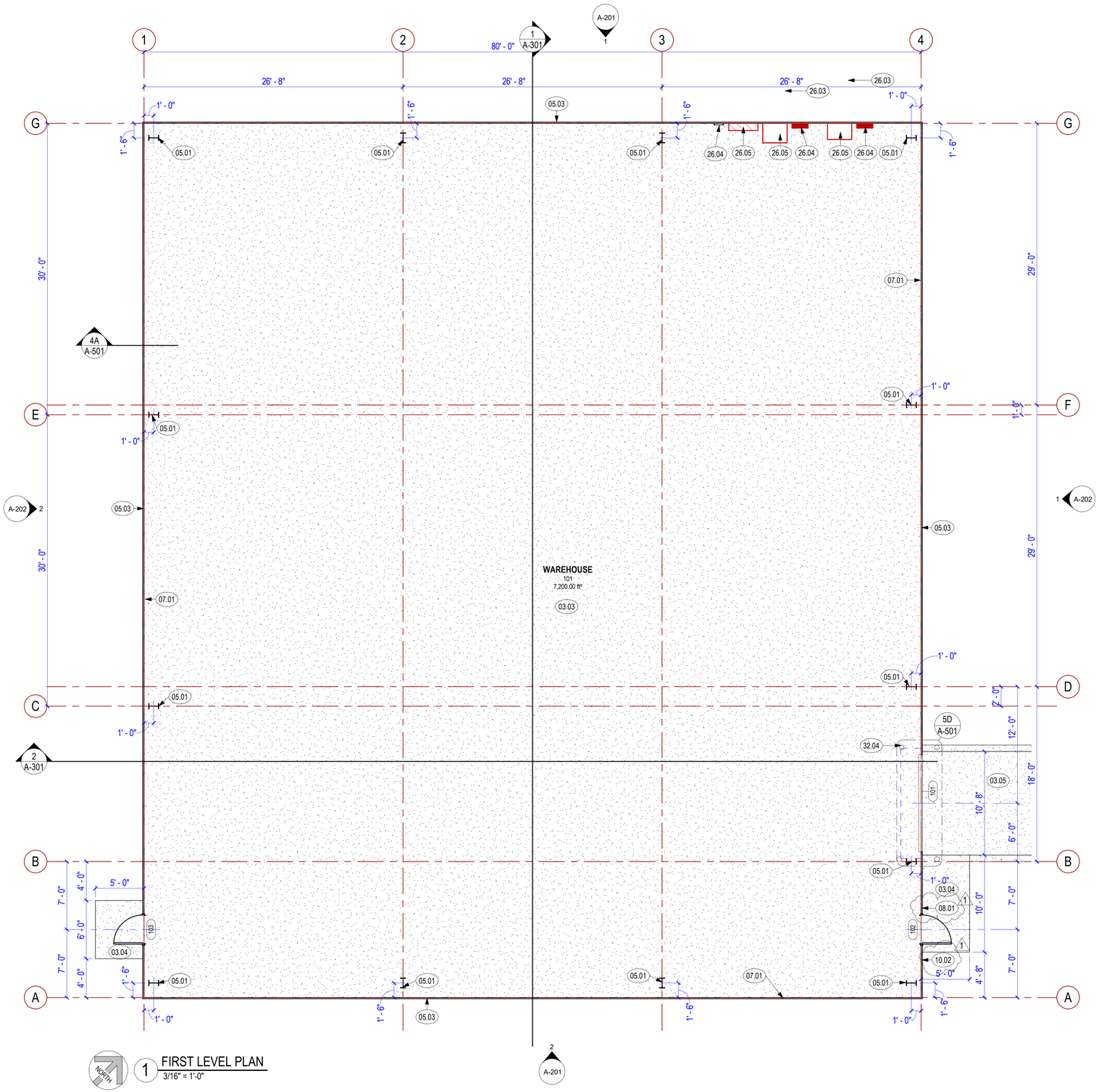

1 FIRST LEVEL PLAN
3/16" = 1'-0"

KEYED NOTES

03.03 CONCRETE FLOOR SLAB (INTERIOR, CONDITIONED SPACES) OVER BASE COURSE CONSISTING OF CLEAN GRADED SAND, GRAVEL, CRUSHED STONE OR CRUSHED BLAST-FURNACE SLAG, SEE STRUCTURAL DRAWINGS
03.04 CONCRETE STOOP, SEE CIVIL AND STRUCTURAL DRAWINGS
03.05 CONCRETE DRIVEWAY/RAMP, SEE CIVIL AND STRUCTURAL DRAWINGS
05.01 STEEL COLUMN, SEE WESTERN STEEL AND STRUCTURAL DRAWINGS
05.03 METAL SIDING, SEE WERSTERN STEEL DRAWINGS
07.01 BATT WALL INSULATION, SEE WESTERN STEEL FOR R-VALUES AND INSTALLATION DETAILS
08.01 DOOR ACCESS CONTROLS TO MATCH THOSE USED ON OTHER BUILDINGS, SEE ELECTRICAL DRAWINGS
10.02 BUILDING IDENTIFICATION SIGNAGE PROVIDED AND INSTALLED BY OWNER
26.03 ELECTRICAL PANEL, SEE ELECTRICAL DRAWINGS
26.04 PANELBOARD, SEE ELECTRICAL DRAWINGS
26.05 ELECTRICAL EQUIPMENT, SEE ELECTRICAL DRAWINGS
32.04 BOLLARDS PROVIDED BY OWNER

GRAPHIC SCALE 64" 2' 0" 2' 4' 8' 16'
3/16" = 1'-0"

EA SOLUTIONS
324 S. State Street, Suite 444
Salt Lake City, UT 84111
www.easolutions.us
385-549-8800

Rev.	Revision 1	Description	Date	Appr.
1			10/23/24	

Designed by: Designer	Submitted: 08 OCT 2024	REV: 1	
Drawn by: CJK	File:		
Reviewed by: TRP	Scale: 3/16" = 1'-0"		
Submitted by: TRP	Project Number: EA24023TP		

KCC STORES WAREHOUSE

2010 N. RULON WHITE BLVD.
FARR WEST, UT 84404
PERMIT SUBMITTAL

FIRST LEVEL PLAN

SHEET NUMBER
A-101

PLOT DATE: 11/20/2024 2:35:43 PM

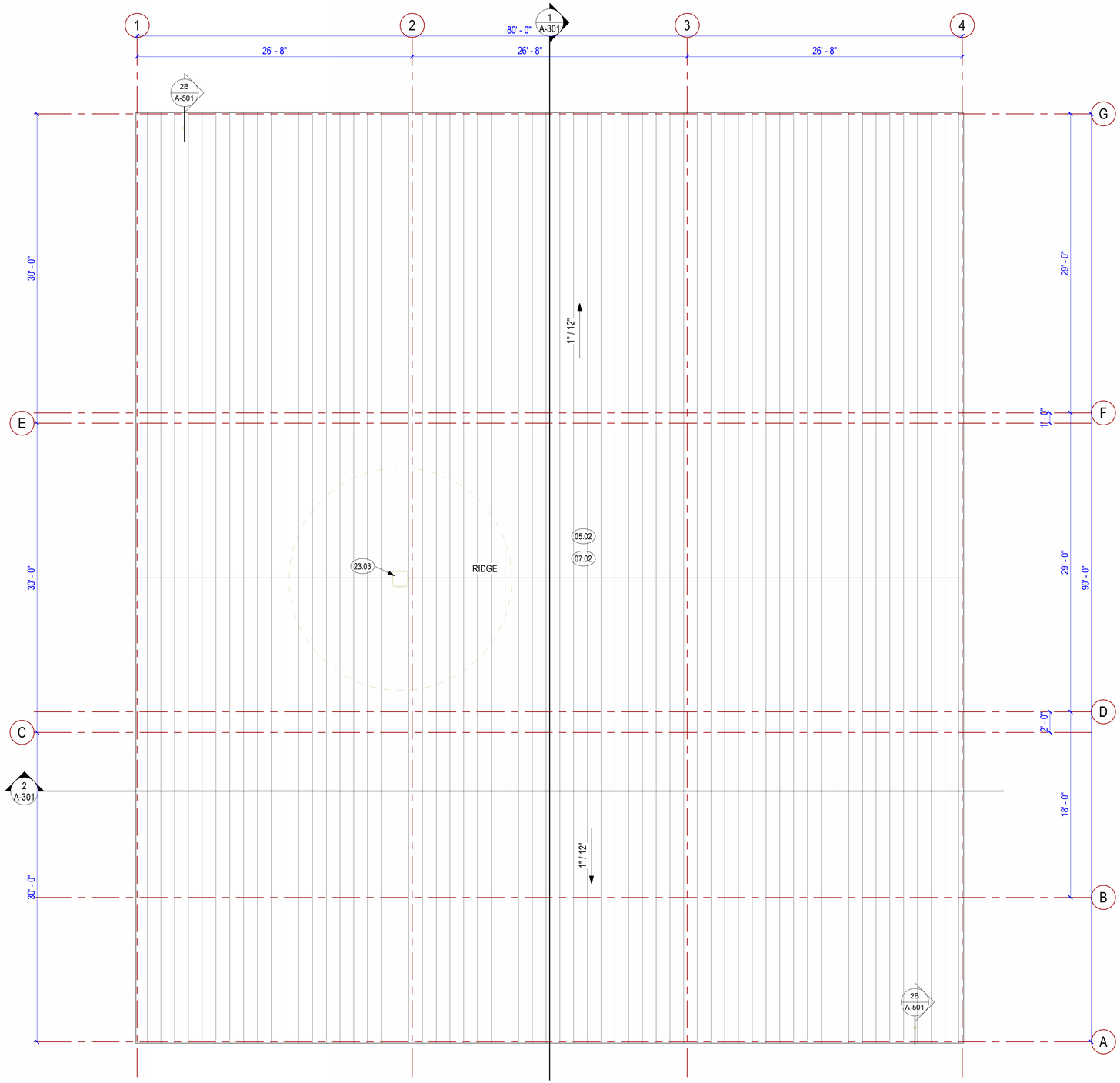

1 ROOF PLAN
3/16" = 1'-0"

KEYED NOTES

05.02 METAL ROOF, SEE WESTERN STEEL DRAWINGS
07.02 BATT ROOF INSULATION, SEE WESTERN STEEL FOR R-VALUES AND INSTALLATION DETAILS
23.03 EXHAUST FAN, SEE DETAIL A3/M-501 FOR ROOF CURB AND FLASHING

1

GRAPHIC SCALE
64" 2' 0" 2' 4' 8' 16'
3/16" = 1'-0"

EA SOLUTIONS
324 S. State Street, Suite 444
Salt Lake City, UT 84111
www.easolutions.us
385-549-8800

Rev.	Description	Date	Appr.
1	Revision 1	10/23/24	

Designed by: Designer	Submitted: 08 OCT 2024	REV: 1	
Drawn by: CJK	File:		
Reviewed by: TRP	Scale: 3/16" = 1'-0"		
Submitted by: TRP	Project Number: EA24022TP		

KCC STORES WAREHOUSE

2010 N. RULON WHITE BLVD.
FARR WEST, UT 84404
PERMIT SUBMITTAL

ROOF PLAN

SHEET NUMBER
A-102

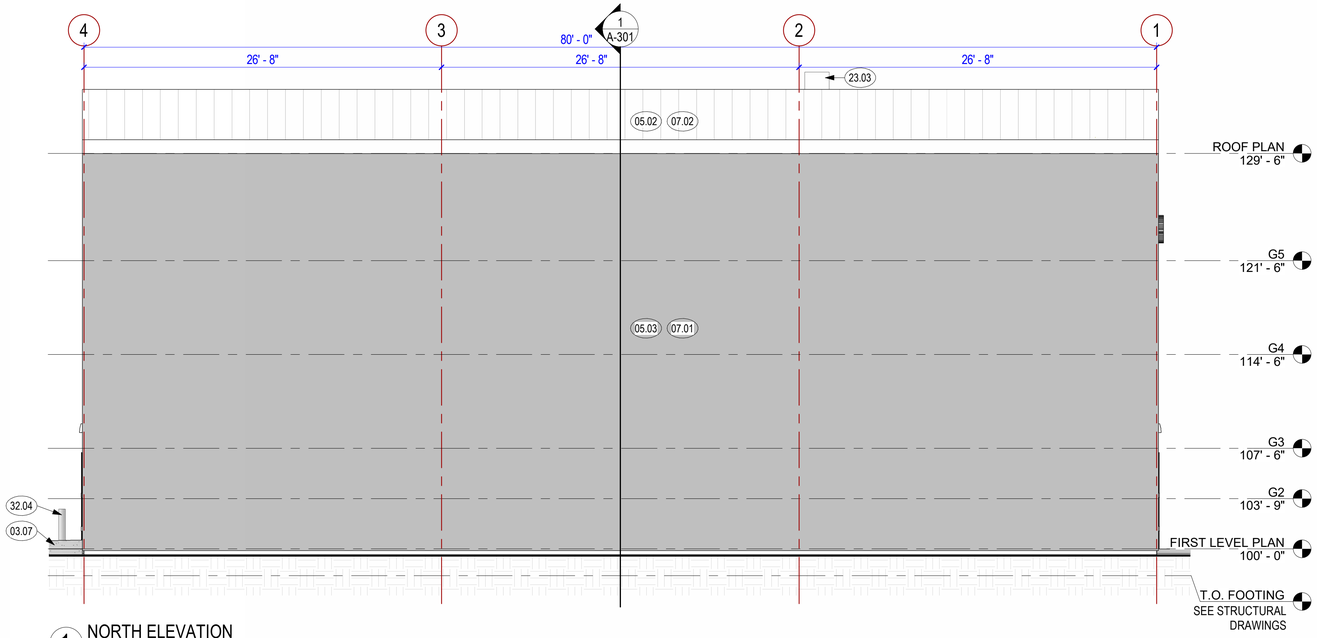

1 NORTH ELEVATION
3/16" = 1'-0"

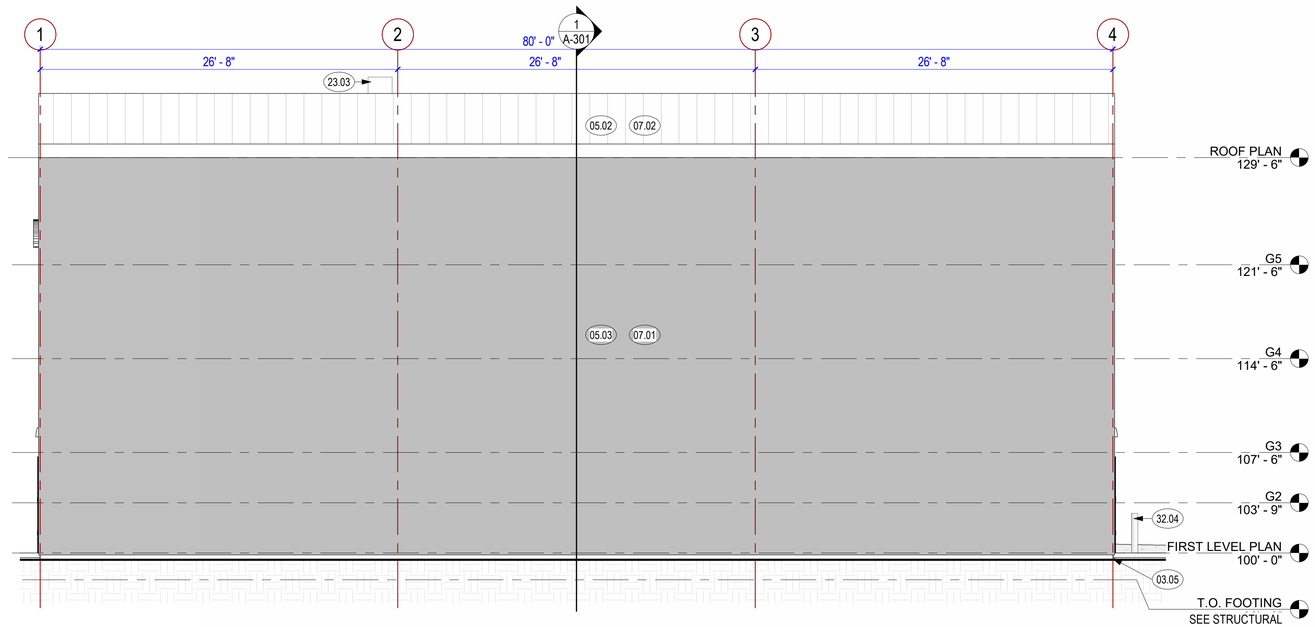

2 SOUTH ELEVATION
3/16" = 1'-0"

KEYED NOTES

03.05 CONCRETE DRIVEWAY/RAMP, SEE CIVIL AND STRUCTURAL DRAWINGS
03.07 CONCRETE CURBING, 8" THICK AND 8" ABOVE ENTIRE RAMP, FOLLOWING RAMP SLOPE
05.02 METAL ROOF, SEE WESTERN STEEL DRAWINGS
05.03 METAL SIDING, SEE WERSTERN STEEL DRAWINGS
07.01 BATT WALL INSULATION, SEE WESTERN STEEL FOR R-VALUES AND INSTALLATION DETAILS
07.02 BATT ROOF INSULATION, SEE WESTERN STEEL FOR R-VALUES AND INSTALLATION DETAILS
23.03 EXHAUST FAN, SEE DETAIL A3/M-501 FOR ROOF CURB AND FLASHING
32.04 BOLLARDS PROVIDED BY OWNER

GRAPHIC SCALE 64" 2' 0" 2' 4' 8' 16'
3/16" = 1'-0"

EA SOLUTIONS
324 S. State Street, Suite 444
Salt Lake City, UT 84111
www.easolutions.us
385-549-8800

Rev.	Revision 1	Description	Date	Appr.
1			10/23/24	

Designed by: Designer
Drawn by: CJK
Reviewed by: TRP
Submitted by: TRP
Submitted: 08 OCT 2024
File:
Scale: 3/16" = 1'-0"
Project Number: EA24022TP
REV: 1

KCC STORES WAREHOUSE

2010 N. RULON WHITE BLVD.
FARR WEST, UT 84404
PERMIT SUBMITTAL

EXTERIOR ELEVATIONS

SHEET NUMBER
A-201

PLOT DATE: 11/20/2024 2:35:53 PM

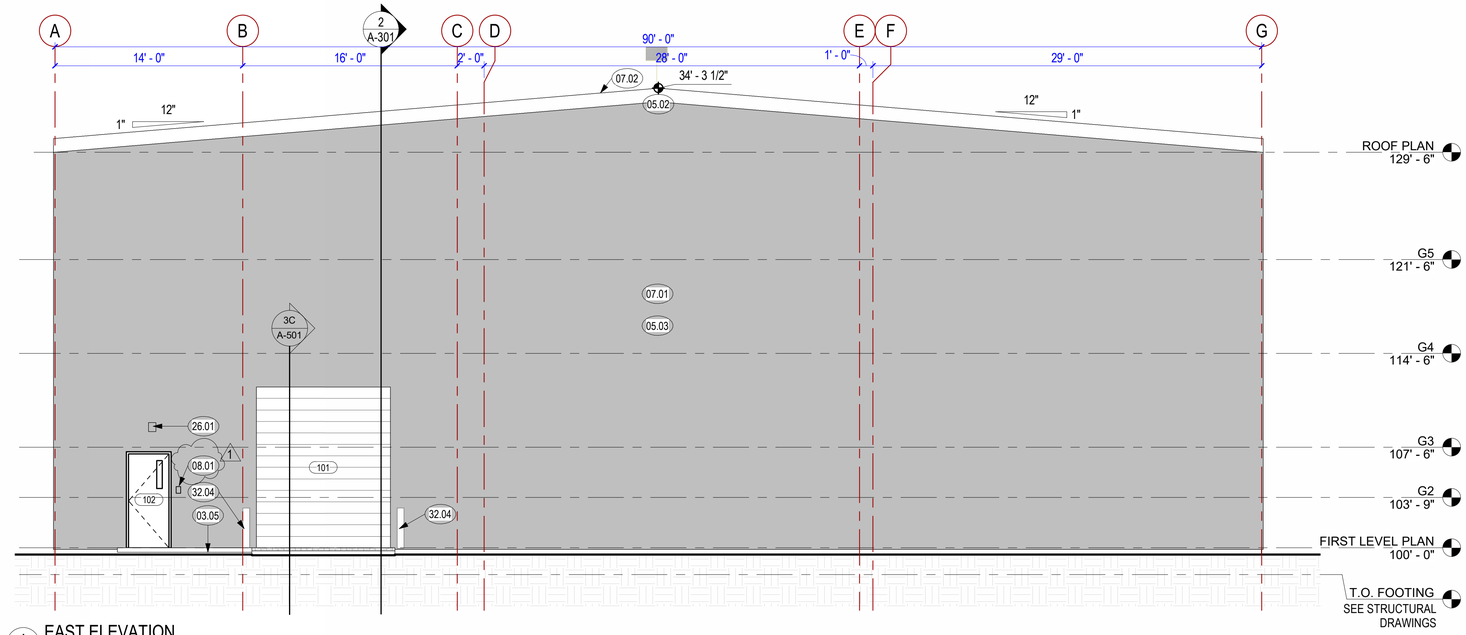

1 EAST ELEVATION
3/16" = 1'-0"

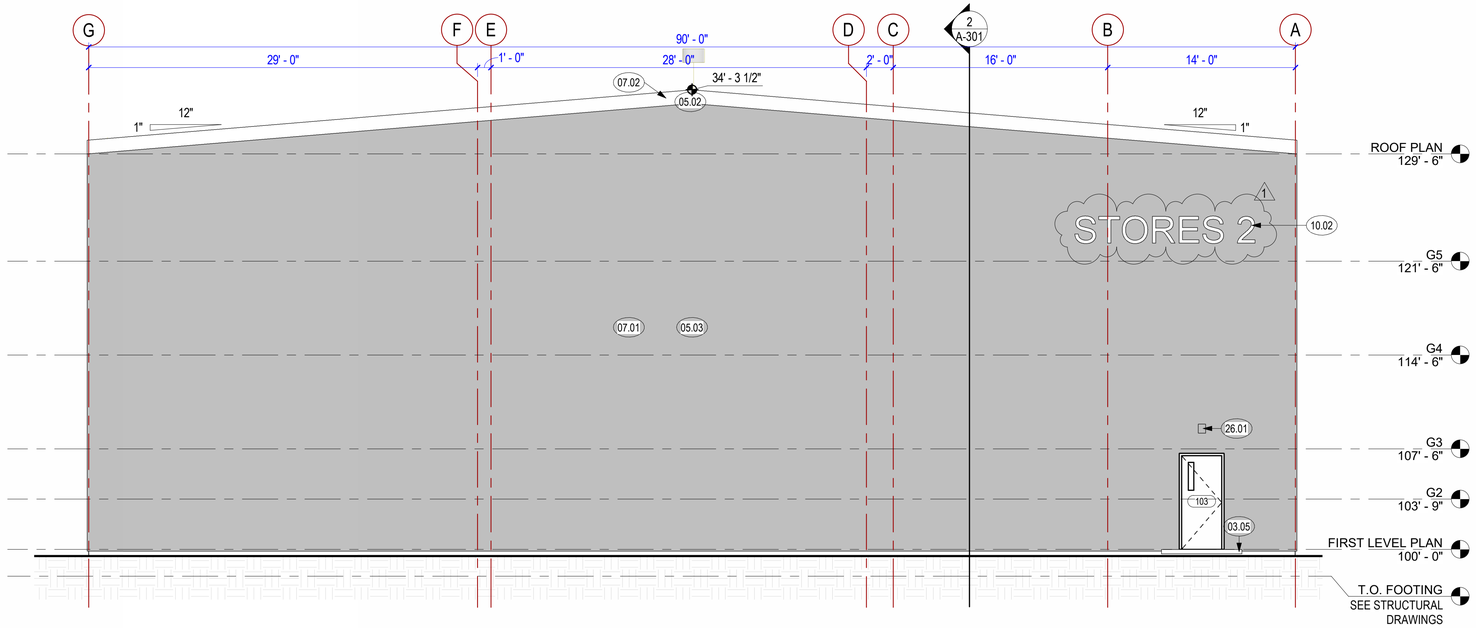

2 WEST ELEVATION
3/16" = 1'-0"

KEYED NOTES

03.05	CONCRETE DRIVEWAY/RAMP, SEE CIVIL AND STRUCTURAL DRAWINGS
05.02	METAL ROOF, SEE WESTERN STEEL DRAWINGS
05.03	METAL SIDING, SEE WERSTERN STEEL DRAWINGS
07.01	BATT WALL INSULATION, SEE WESTERN STEEL FOR R-VALUES AND INSTALLATION DETAILS
07.02	BATT ROOF INSULATION, SEE WESTERN STEEL FOR R-VALUES AND INSTALLATION DETAILS
08.01	DOOR ACCESS CONTROLS TO MATCH THOSE USED ON OTHER BUILDINGS, SEE ELECTRICAL DRAWINGS
10.02	BUILDING IDENTIFICATION SIGNAGE PROVIDED AND INSTALLED BY OWNER
26.01	LIGHTING FIXTURE, SEE ELECTRICAL DRAWINGS
32.04	BOLLARDS PROVIDED BY OWNER

GRAPHIC SCALE 64" 2' 0" 2' 4' 8' 16'
3/16" = 1'-0"

EA SOLUTIONS
324 S. State Street, Suite 444
Salt Lake City, UT 84111
www.easolutions.us
385-549-8800

Rev.	Revision 1	Description	Date	Appr.
1			10/23/24	

Designed by: Designer	Submitted: 08 OCT 2024	REV: 1	
Drawn by: CJK	File:		
Reviewed by: TRP	Scale: 3/16" = 1'-0"		
Submitted by: TRP	Project Number: EA24022TP		

KCC STORES WAREHOUSE

2010 N. RULON WHITE BLVD.
FARR WEST, UT 84404
PERMIT SUBMITTAL

EXTERIOR ELEVATIONS

SHEET NUMBER
A-202

PLOT DATE: 11/20/2024 2:36:01 PM

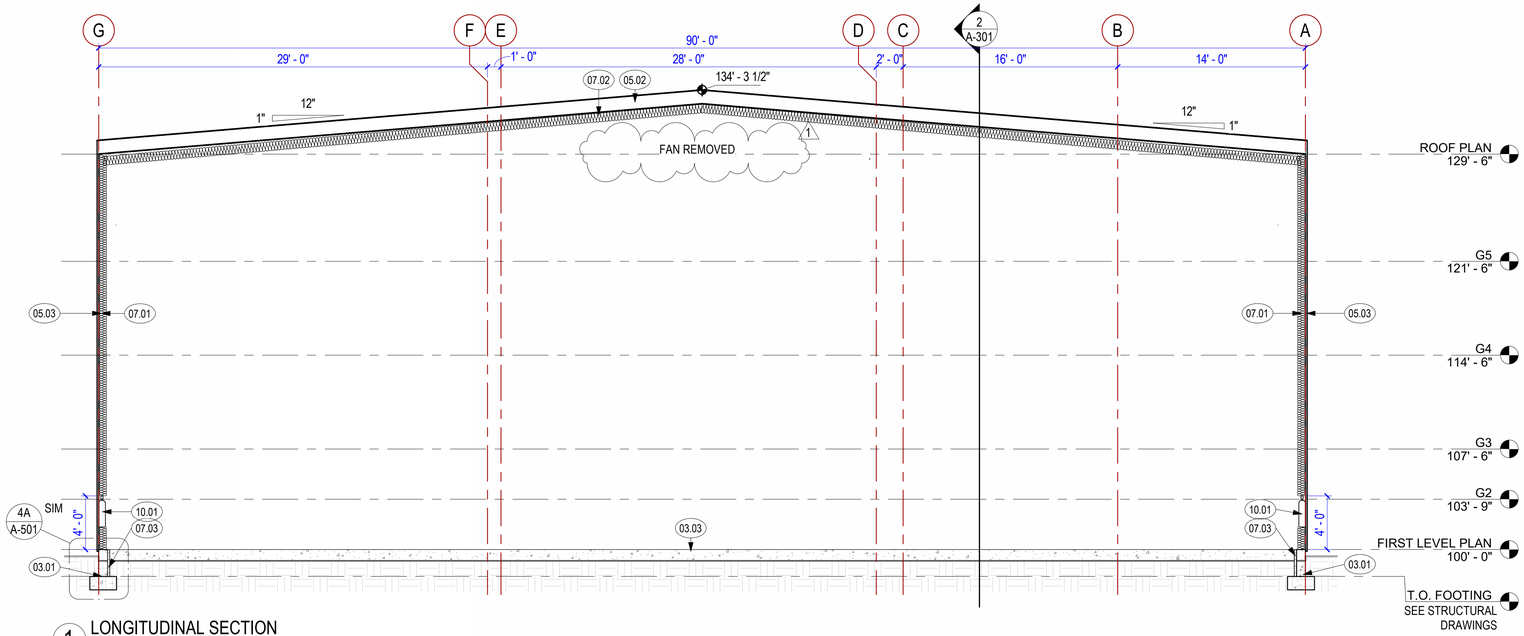

1 LONGITUDINAL SECTION
3/16" = 1'-0"

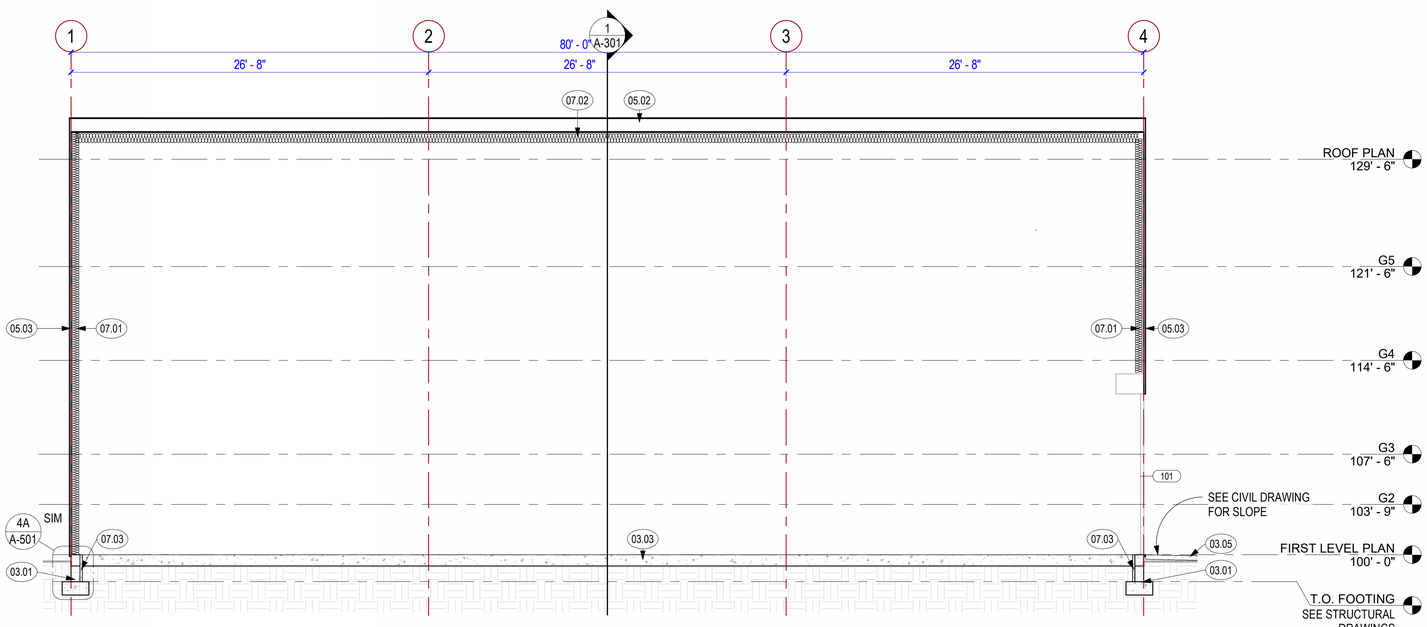

2 CROSS SECTION
3/16" = 1'-0"

KEYED NOTES

03.01 FOOTINGS AND FOUNDATION, SEE STRUCTURAL DRAWINGS
03.03 CONCRETE FLOOR SLAB (INTERIOR, CONDITIONED SPACES) OVER BASE COURSE CONSISTING OF CLEAN GRADED SAND, GRAVEL, CRUSHED STONE OR CRUSHED BLAST-FURNACE SLAG, SEE STRUCTURAL DRAWINGS
03.05 CONCRETE DRIVEWAY/RAMP, SEE CIVIL AND STRUCTURAL DRAWINGS
05.02 METAL ROOF, SEE WESTERN STEEL DRAWINGS
05.03 METAL SIDING, SEE WERSTERN STEEL DRAWINGS
07.01 BATT WALL INSULATION, SEE WESTERN STEEL FOR R-VALUES AND INSTALLATION DETAILS
07.02 BATT ROOF INSULATION, SEE WESTERN STEEL FOR R-VALUES AND INSTALLATION DETAILS
07.03 R-15 RIGID INSULATION FOR 24" BELOW SLAB ON GRADE
10.01 WALL-MOUNTED FIRE EXTINGUISHER, SEE SHEET A-501 FOR MOUNTING HEIGHT

64" 2' 0" 2' 4' 8' 16'
GRAPHIC SCALE 3/16" = 1'-0"

STATE OF UTAH
TRP
TYLER R. PORTER
08 OCT 2024
LICENSED ARCHITECT

EA SOLUTIONS
324 S. State Street, Suite 444
Salt Lake City, UT 84111
www.easolutions.us
385-549-8800

Rev.	Revision 1	Description	Date	Appr.
1			10/23/24	

Designed by: Designer
Drawn by: CJK
Reviewed by: TRP
Submitted by: TRP
Submitted: 08 OCT 2024
File:
Scale: 3/16" = 1'-0"
Project Number: EA24022TP
REV: 1

KCC STORES WAREHOUSE
2010 N. RULON WHITE BLVD.
FARR WEST, UT 84404
PERMIT SUBMITTAL

BUILDING SECTIONS

SHEET NUMBER
A-301

PLOT DATE: 11/20/2024 2:36:05 PM

DOOR SCHEDULE

MARK	WIDTH	HEIGHT	THICK	TYPE	DOOR ELEV.	DOOR MAT'L & FIN.	FRAME MAT'L & FIN	FRAME PROFILE	FIRE RATE	HDWR	REMARKS
101	10' - 0"	12' - 0"	3"	OVERHEAD - COILING	3C/A-501	INSULATED METAL, WHITE	HOLLOW METAL, WHITE	NA	NONE	TBD	0.90 MAX. U-FACTOR
102	3' - 0"	7' - 0"	1 3/4"	HINGED	5B/A-501	INSULATED METAL, WHITE	HOLLOW METAL, WHITE	5A/A-501	NONE	TBD	0.63 MAX. U-FACTOR
103	3' - 0"	7' - 0"	1 3/4"	HINGED	5B/A-501	INSULATED METAL, WHITE	HOLLOW METAL, WHITE	5A/A-501	NONE	TBD	0.63 MAX. U-FACTOR

DOOR 101:
OVERHEAD DOOR ROLLING STEEL SERVICE DOOR
STORMTITE AP MODEL 627 - WHITE (OR EQUIVALENT)
ELECTRIC (RHX) OPERATION WITH INTERIOR CONTROLS
AIR INFILTRATION PACKAGE (MEETS IECC CODE REQUIREMENTS 2021 C402.4.3/2015 C402.5.2); INCLUDES GUIDE COVER AND CAP; WEATHERSEALS ON INTERIOR & EXTERIOR OF GUIDE; LINTEL BRUSH SEAL; BOTTOM ASTRAGAL

DOOR 102:
TRUDOOR METAL BUILDING DOOR (OR EQUIVALENT)
SIZE: 3070
DOOR HAND: LHR
LITE KIT: 6" x 30"
GLASS TYPE: 1" INSULATED
SUBFRAME SIZE: 6 1/2"
FINISH: WHITE
HARDWARE PACKAGE: PANIC BAR RIM EXIT DEVISE W/OUTSIDE LEVER AND DOOR CLOSER, ACCESS CONTROL TO MATCH OTHER BUILDINGS
EXTRAS: KICKPLATE
HARDWARE GRADE: HEAVY DUTY

DOOR 103:
TRUDOOR METAL BUILDING DOOR (OR EQUIVALENT)
SIZE: 3070
DOOR HAND: RHR
LITE KIT: 6" x 30"
GLASS TYPE: 1" INSULATED
SUBFRAME SIZE: 6 1/2"
FINISH: WHITE
HARDWARE PACKAGE: EXIT ONLY PANIC BAR RIM EXIT DEVISE W/NO OUTSIDE TRIM AND DOOR CLOSER
EXTRAS: KICKPLATE
HARDWARE GRADE: HEAVY DUTY

NOTE: SEE WESTERN STEEL DRAWINGS FOR DOOR HEADER AND DOOR JAMB DETAILS

NOTE: FACTORY-BUILT FENESTRATION AND DOORS ARE LABELED AS MEETING AIR LEAKAGE REQUIREMENTS.

NOTE: DOOR HARDWARE RELEASE OF ELECTRIC LOCKING SYSTEMS SHALL BE PERMITTED ON DOORS IN THE MEANS OF EGRESS IN ANY OCCUPANCY (IBC 1010.2.11).

NOTE: SENSOR RELEASE OF ELECTRIC LOCKING SYSTEMS SHALL BE PERMITTED ON DOORS LOCATED IN THE MEANS OF EGRESS IN ANY OCCUPANCY.

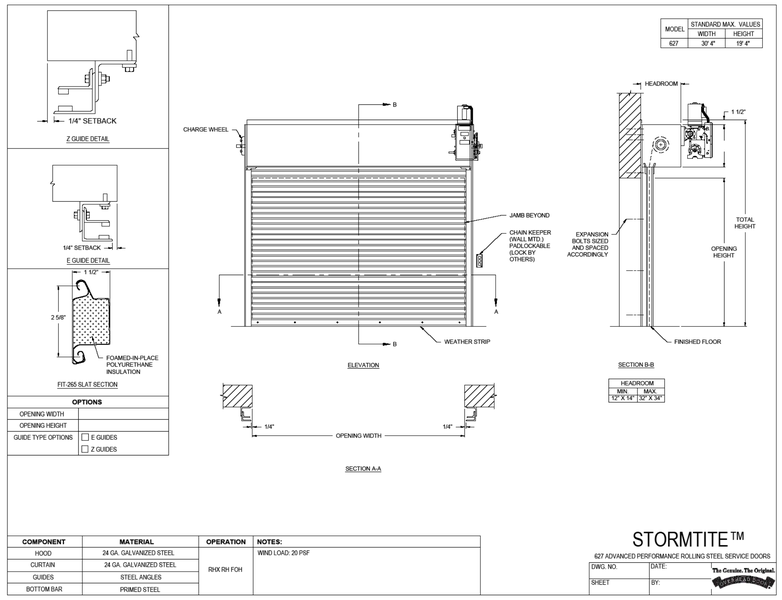

3C 100120 OVERHEAD COILING DOOR - STORMTITE AP MODEL 627
N.T.S.

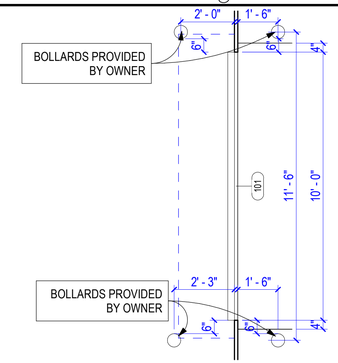

5D BOLLARDS @ OVERHEAD DOOR
3/8" = 1'-0"

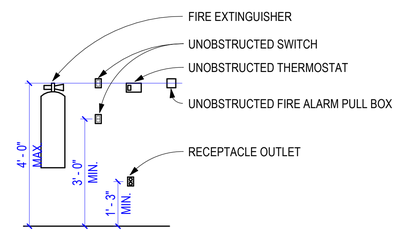

5C RECEPTACLES AND SWITCH MOUNTING HEIGHTS
1/2" = 1'-0"

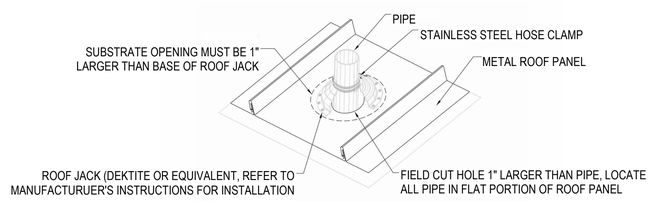

2B PIPE PENETRATION DETAIL
N.T.S.

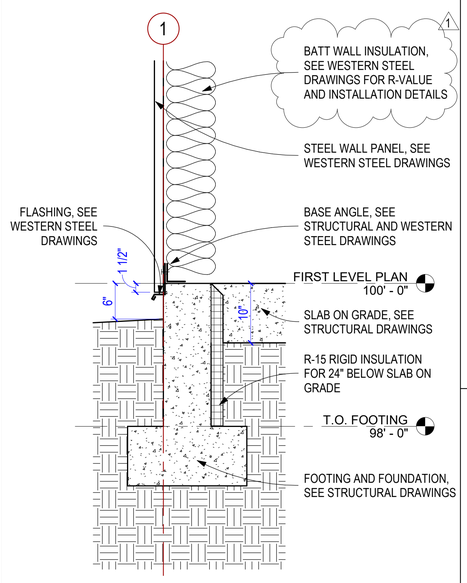

4A EXTERIOR WALL @ FOUNDATION
1" = 1'-0"

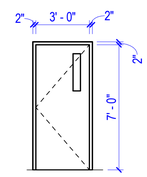

5B 3070 INSULATED METAL DOOR
1/4" = 1'-0"

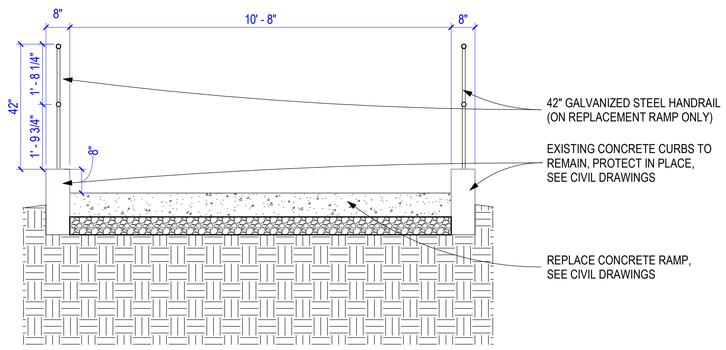

2A RAMP, CURB, AND HANDRAIL DETAIL
1/2" = 1'-0"

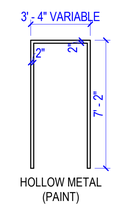

5A FRAME ELEVATIONS
1/4" = 1'-0"

EA SOLUTIONS
324 S. State Street, Suite 444
Salt Lake City, UT 84111
www.easolutions.us
385-549-8800

Rev.	Revision 1	Description	Date	Appr.
1			10/23/24	

Designed by: Designer
Submitted: 08 OCT 2024
REV: 1
Drawn by: CJK
File:
Reviewed by: TRP
Scale: As indicated
Submitted by: TRP
Project Number: EA24022TP

KCC STORES WAREHOUSE
2010 N. RULON WHITE BLVD.
FARR WEST, UT 84404
PERMIT SUBMITTAL

ARCHITECTURAL DETAILS AND SCHEDULES

SHEET NUMBER
A-501

PLOT DATE: 11/20/2024 2:36:07 PM

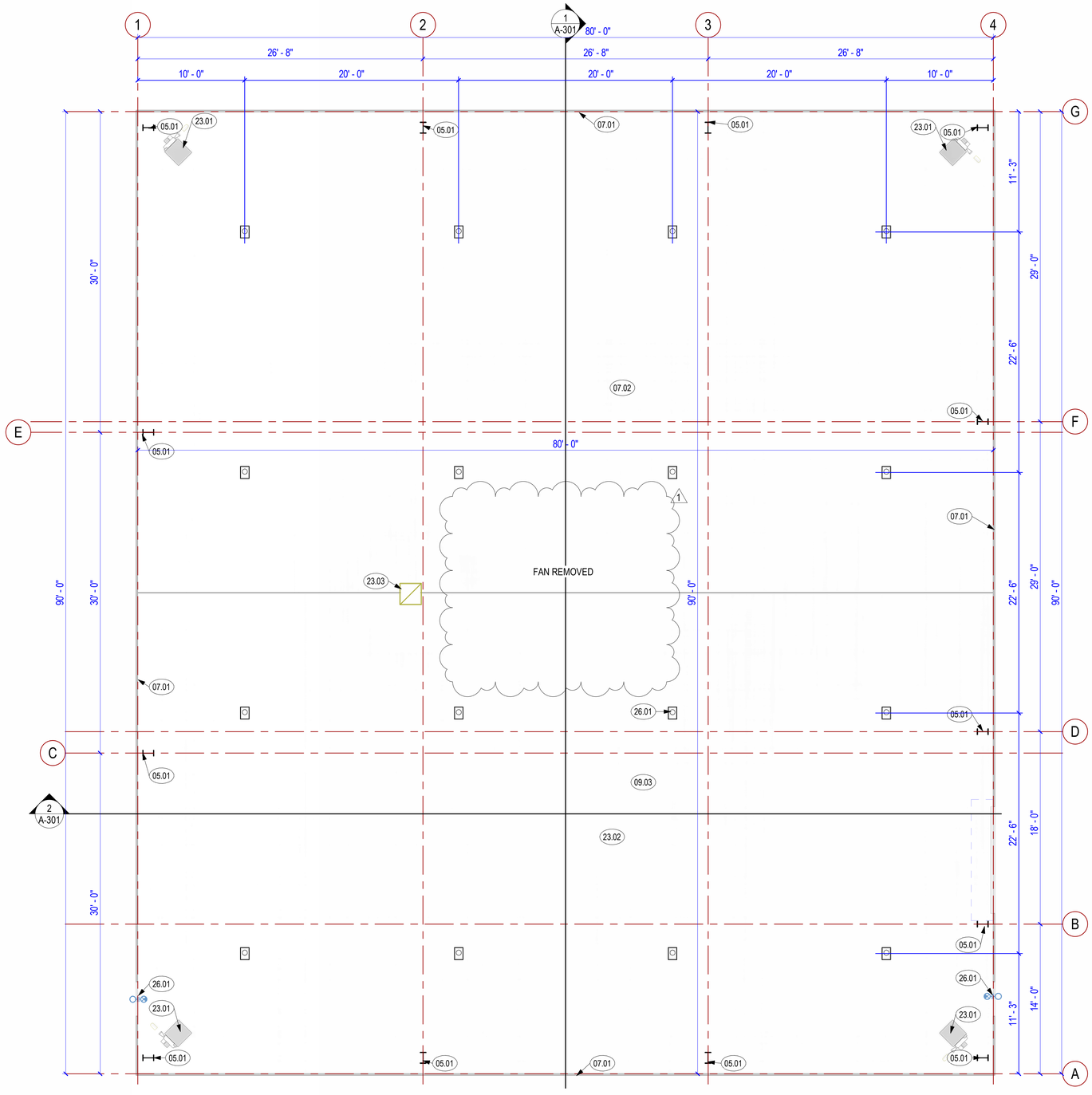

1 FIRST LEVEL REFLECTED CEILING PLAN
3/16" = 1'-0"

KEYED NOTES

05.01 STEEL COLUMN, SEE WESTERN STEEL AND STRUCTURAL DRAWINGS
07.01 BATT WALL INSULATION, SEE WESTERN STEEL FOR R-VALUES AND INSTALLATION DETAILS
07.02 BATT ROOF INSULATION, SEE WESTERN STEEL FOR R-VALUES AND INSTALLATION DETAILS
09.03 OPEN TO STRUCTURE ABOVE
23.01 SEE DETAIL A5/M-501 FOR FLASHING DETAIL AT ROOF PENETRATION
23.02 CEILING MOUNTED FANS PROVIDED BY OWNER, INSTALLED BY CONTRACTOR, SEE MECHANICAL AND ELECTRICAL DRAWINGS
23.03 EXHAUST FAN, SEE DETAIL A3/M-501 FOR ROOF CURB AND FLASHING
26.01 LIGHTING FIXTURE, SEE ELECTRICAL DRAWINGS

REFLECTED CEILING PLAN LEGEND

EXIT SIGN

WALL MOUNTED LIGHT

SURFACE MOUNTED LIGHT

64" 2' 0" 2' 4' 8' 16'
GRAPHIC SCALE 3/16" = 1'-0"

STATE OF UTAH
TRAVIS R. POPPLEWELL
08 OCT 2024
ARCHITECT
EA SOLUTIONS
324 S. State Street, Suite 444
Salt Lake City, UT 84111
www.easolutions.us
385-549-8800

Rev.	Revision 1	Description	Date	Appr.
1			10/23/24	

Designed by: Designer
Drawn by: CJK
Reviewed by: TRP
Submitted by: TRP
Submitted: 08 OCT 2024
REV: 1
File:
Scale: As indicated
Project Number: EA24022TP

KCC STORES WAREHOUSE

2010 N. RULON WHITE BLVD.
FARR WEST, UT 84404
PERMIT SUBMITTAL

FIRST LEVEL REFLECTED CEILING PLAN

SHEET NUMBER
A-701

PLOT DATE: 11/20/2024 2:36:11 PM

SYMBOL LEGEND - PIPING

NOTE: ALL ABBREVIATIONS MAY NOT BE USED.

SYMBOL	DESCRIPTION
	SHUT OFF VALVE
	GATE VALVE
	CHECK VALVE
	AUTOMATIC 2-WAY VALVE
	AUTOMATIC 3-WAY VALVE
	GLOBE VALVE
	BALL VALVE
	RELIEF VALVE
	PRESSURE REDUCING VALVE
	BUTTERFLY VALVE
S	SOLENOID VALVE
	ANGLE VALVE
	VENTURI VALVE
	BALANCING OR PLUG COCK
	FLOW SETTER
	EXPANSION VALVE
	GAS COCK
MAV	MANUAL AIR VENT
	STRAINER
	GAUGE COCK
	FLEXIBLE CONNECTION
	PRESSURE GAUGE
	THERMOMETER
	PIPE REDUCER
OK	REFRIGERANT SITE GLASS
	REFRIGERANT STRAINER
	REFRIGERANT FILTER DRIER
	90 DEGREE ELBOW UP
	90 DEGREE ELBOW DOWN
	90 DEGREE TEE UP
	90 DEGREE TEE DOWN
	PIPE UNION
	PIPE CAP
	PIPE ANCHOR
	FLOAT AND THERMOSTATIC TRAP

SYMBOL LEGEND - MECH

NOTE: ALL ABBREVIATIONS MAY NOT BE USED.

SYMBOL	DESCRIPTION
	SQUARE OR RECTANGULAR SUPPLY DIFFUSER
	SQUARE OR RECTANGULAR RETURN DIFFUSER
	SQUARE OR RECTANGULAR EXHAUST DIFFUSER
	ROUND DIFFUSER
	LINEAR SLOT GRILLE OR DIFFUSER
	FLEXIBLE DUCT
	SIDEWALL GRILLE OR REGISTER
	DUCT HIGH EFFICIENCY TAKE OFF WITH BALANCING DAMPER
	BALANCING DAMPER
	FIRE DAMPER
	FIRE / SMOKE COMBINATION DAMPER
T S H	THERMOSTAT - SENSOR - HUMIDISTAT

SYMBOL LEGEND - DUCTWORK

NOTE: ALL ABBREVIATIONS MAY NOT BE USED.

SYMBOL	DESCRIPTION
	RECTANGULAR SUPPLY DUCT UP
	RECTANGULAR SUPPLY DUCT DOWN
	RECTANGULAR RETURN DUCT UP
	RECTANGULAR RETURN DUCT DOWN
	RECTANGULAR EXHAUST DUCT UP
	RECTANGULAR EXHAUST DUCT DOWN
	ROUND SUPPLY DUCT UP
	ROUND SUPPLY DUCT DOWN
	ROUND RETURN DUCT UP
	ROUND RETURN DUCT DOWN
	ROUND EXHAUST DUCT UP
	ROUND EXHAUST DUCT DOWN
	OVAL SUPPLY DUCT UP
	OVAL SUPPLY DUCT DOWN
	OVAL RETURN DUCT UP
	OVAL RETURN DUCT DOWN
	OVAL EXHAUST DUCT UP
	OVAL EXHAUST DUCT DOWN
	SPIRAL OVAL DUCT
	SPIRAL ROUND DUCT
	DUCT INSULATION
	DUCT LINING
	90° RECTANGULAR ELBOW WITH TURNING VANES
	90° ROUND RADIUS ELBOW
	GORED OVAL RADIUS ELBOW
	DUCT SIZE OR SHAPE TRANSITION
	DUCT TO BE DEMOLISHED

PIPING LEGEND

NOTE: ALL ABBREVIATIONS MAY NOT BE USED.

ABBREVIATION	DESCRIPTION
CHWR	CHILLED WATER RETURN
CHWS	CHILLED WATER SUPPLY
CA	COMPRESSED AIR
CD	CONDENSATE DRAIN
C02	CARBON DIOXIDE
CWR	CONDENSER WATER RETURN
CWS	CONDENSER WATER SUPPLY
FP	FIRE PROTECTION
FOR	FUEL OIL RETURN
FOS	FUEL OIL SUPPLY
FOV	FUEL OIL VENT
GR	GLYCOL RETURN
GS	GLYCOL SUPPLY
HPC	HIGH PRESSURE CONDENSATE
MPC	MEDIUM PRESSURE CONDENSATE
LPC	LOW PRESSURE CONDENSATE
HPS	HIGH PRESSURE STEAM
MPS	MEDIUM PRESSURE STEAM
LPS	LOW PRESSURE STEAM
HHWR	HEATING HOT WATER RETURN
HHWS	HEATING HOT WATER SUPPLY
LPG	LIQUID PROPANE GAS
MA	MEDICAL AIR
NG	NATURAL GAS
NO	NITROUS OXIDE
O	OXYGEN
PC	PUMPED CONDENSATE
RG	REFRIGERANT GAS
RL	REFRIGERANT LIQUID
SMR	SNOW MELT RETURN
SMS	SNOW MELT SUPPLY
VAC	VACUUM

SYMBOL LEGEND - MISC

REFERENCE LINES AND SYMBOLS

SYMBOL	DESCRIPTION
- / ---	VIEW OR DETAIL INDICATOR: # INDICATES DETAIL NUMBER, SHEET INDICATES DRAWING SHEET WHERE VIEW OR DETAIL IS SHOWN.
- / ---	ELEVATION OR SECTION INDICATOR: # INDICATES VIEW NUMBER, SHEET INDICATES DRAWING SHEET WHERE VIEW IS SHOWN.
NAME ###	ROOM / SPACE INDICATOR
#	KEYNOTE INDICATOR
#	REVISION INDICATOR
XX-##	PLUMBING FIXTURE INDICATOR
XX-##	EQUIPMENT INDICATOR
TAG / CFM	REGISTER, GRILLE, OR DIFFUSER INDICATOR
OR	BREAKLINE
MATCH LINE SEE XX/XXX	MATCHLINE INDICATOR
	CONTRACT LIMIT LINE: DASHDOT, WIDE LINE
	NEW CONNECTION TO EXISTING
	POINT OF DEMOLITION

ABBREVIATIONS

NOTE: ALL ABBREVIATIONS MAY NOT BE USED.

(E)	EXISTING
(F)	FUTURE
AC	AIR CONDITION(-ING,-ED)
APD	AIR PRESSURE DROP
BD	BALANCING DAMPER
BHP	BRAKE HORSE POWER
BTU	BRITISH THERMAL UNIT
BTUH	BTU/HOUR
CFH	CUBIC FEET PER HOUR
CFM	CUBIC FEET PER MINUTE
CV	CONTROL VALVE
DB	DRY BULB TEMPERATURE
DCW	DOMESTIC COLD WATER
DHW	DOMESTIC HOT WATER
DHWR	DOMESTIC HOT WATER RECIRC
DP	DEPTH, DEEP, OR DROP IN PRESSURE
EA	EXHAUST AIR
EER	ENERGY EFFICIENCY RATIO
EFF	EFFICIENCY
ELEC	ELECTRIC
ELEV	ELEVATION
ENT	ENTERING
EVAP	EVAPORAT(-E, -ING, -ED, -OR)
EWT	ENTERING WATER TEMPERATURE
EXT	EXTERNAL
FD	FIRE DAMPER
FLA	FULL LOAD AMPS
FPI	FINS PER INCH
FPM	FEET PER MINUTE
FPS	FEET PER SECOND
FSD	FIRE SMOKE DAMPER
GE	GREASE EXHAUST
GPH	GALLONS PER HOUR
GPM	GALLONS PER MINUTE
HD	HEAD
HG	MERCURY
HP	HORSEPOWER
HR	HOUR
HTG	HEATING
HZ	HERTZ (FREQUENCY)
IN	INCH
KW	KILOWATT
LAT	LEAVING AIR TEMPERATURE
LBS	POUNDS
LH	LATENT HEAT
LRA	LOCKED ROTOR AMPS
LVG	LEAVING
LWT	LEAVING WATER TEMPERATURE
MBH	THOUSAND BTU PER HOUR
MCA	MINIMUM CIRCUIT AMPS
MFR	MANUFACTUR(-ER, -ED)
NC	NORMALLY CLOSED OR NOISE CRITERIA
NIC	NOT IN CONTRACT
NO	NORMALLY OPEN
NPSH	NET POSITIVE SUCTION HEAD
NTS	NOT TO SCALE
OA	OUTSIDE AIR
OD	OUTSIDE DIAMETER
OZ	OUNCE
PD	PRESSURE DROP OR DIFFERENCE
PG	PROPOLENE GLYCOL
PH	PHASE
PPM	PARTS PER MILLION
PSF	POUNDS PER SQUARE FOOT
PSI	POUNDS PER SQUARE INCH
PSIA	PSI ABSOLUTE
PSIG	PSI GAUGE
RA	RETURN AIR
RECIRC	RECIRCULATE (-ER, -ED, -ING)
REFR	REFRIGERATION
REQD	REQUIRED
RLA	RATED LOAD AMPS
RPM	REVOLUTIONS PER MINUTE
SA	SUPPLY AIR
SCFM	STANDARD CUBIC FEET PER MINUTE
SCW	SOFT COLD WATER
SH	SENSIBLE HEAT
SP	STATIC PRESSURE
SPEC(S)	SPECIFICATION(S)
SQ	SQUARE
SS	SANITARY SEWER, SOIL, WASTE
STD	STANDARD
TA	TRANSFER AIR
TD	TEMP. DROP OR DIFF.
TEMP	TEMPERATURE
TOT	TOTAL
TSTAT	THERMOSTAT
TYP	TYPICAL
V	VOLT, VOLTAGE OR VENT
VAC	VACUUM
VAV	VARIABLE AIR VOLUME
VEL	VELOCITY
VENT	VENT, VENTILATION
VERT	VERTICAL
VFD	VARIABLE FREQUENCY DRIVE
VOL	VOLUME
VTR	VENT THROUGH ROOF
WB	WET BULB TEMP
WC	WATER COLUMN
WG	WATER GAUGE
WPD	WATER PRESSURE DROP
WTR	WATER

MECHANICAL GENERAL NOTES

1. THE MECHANICAL DRAWINGS SHOW THE GENERAL DESIGN, ARRANGEMENT, & EXTENT OF THE MECHANICAL SYSTEM. BECAUSE OF THE SMALL SCALE OF THE DRAWINGS, THESE DRAWINGS DO NOT SHOW ALL OFFSETS, BENDS, OR ELBOWS NECESSARY FOR THE COMPLETE INSTALLATION IN THE SPACE PROVIDED. CONTRACTOR SHALL MAKE ALTERATIONS AS MAY BE NECESSARY TO MAKE THE SYSTEM COMPLETE & OPERATIONAL IN ACCORDANCE WITH THE DESIGN INTENT.
2. MAJOR DEVIATIONS SUCH AS CHANGES IN SIZES, WEIGHTS, QUANTITIES, OR MATERIAL REQUIRE PRIOR APPROVAL BY THE DESIGN ENGINEER.
3. THE DRAWINGS & SPECIFICATIONS HAVE BEEN PREPARED TO SUPPLEMENT EACH OTHER & SHALL BE INTERPRETED AS AN INTEGRAL UNIT WITH THE ITEMS SHOWN ON ONE & NOT THE OTHER BEING FURNISHED & INSTALLED AS THOUGH SHOWN AND CALLED OUT IN BOTH DOCUMENTS.
4. THE ENTIRE MECHANICAL INSTALLATION SHALL CONFORM TO THE REQUIREMENTS OF THE MOST RECENTLY ADOPTED BUILDING CODES, MECHANICAL CODE, PLUMBING CODE, ELECTRICAL CODE, & ALL OTHER APPLICABLE CITY, COUNTY, STATE, & FEDERAL CODES & REGULATIONS IN EFFECT.
5. THE ENTIRE MECHANICAL INSTALLATION SHALL CONFORM TO ALL CODES, RULES, REGULATIONS, & REQUIREMENTS OF THE BUILDING OWNER.
6. ALL MECHANICAL COMPONENTS AND EQUIPMENT SHALL BE INSTALLED TO CONFORM WITH ANY APPLICABLE LOCAL SEISMIC REQUIREMENTS.
7. PRIOR TO FABRICATION & INSTALLATION OF ANY MECHANICAL COMPONENT THE CONTRACTOR SHALL COORDINATE THE INSTALLATION OF ALL MECHANICAL WORK WITH ALL OTHER BUILDING TRADES, INCLUDING BUILDING TRADES HIRED DIRECTLY BY THE OWNER. WHERE CONFLICTS MAY OCCUR, THEY SHALL BE RESOLVED PRIOR TO INSTALLATION.
8. VERIFY ALL REQUIRED SERVICE CONNECTIONS, INCLUDING ELECTRICAL CHARACTERISTICS, FOR ALL EQUIPMENT PRIOR TO ORDERING OR FABRICATING MECHANICAL EQUIPMENT AND COMPONENTS.
9. THE SPACE ABOVE CEILINGS IS LIMITED. CAREFUL COORDINATION IS REQUIRED WITH ALL TRADES BEFORE ANY PIPE, DUCT, OR EQUIPMENT IS ORDERED &/OR INSTALLED. ANY CONFLICTS &/OR CHANGES FOUND DURING INSTALLATION THAT RESULTS FROM THE LACK OF COORDINATION BY THE CONTRACTORS DURING THE SHOP DRAWING PROCESS ARE THE RESPONSIBILITY OF THE CONTRACTOR.
10. ALL MECHANICAL INFORMATION IS NOT SHOWN ON THE MECHANICAL DRAWINGS. THE CONTRACTOR SHALL BE RESPONSIBLE FOR COORDINATION OF ALL INFORMATION ON ALL OTHER CONSTRUCTION DOCUMENTS.
11. THE CONTRACTOR SHALL BE RESPONSIBLE TO REVIEW & USE, WHERE APPROPRIATE, ALL THE MECHANICAL DETAILS SHOWN ON THE DRAWINGS. DETAILS MAY OR MAY NOT BE CALLED OUT ON THE DRAWINGS WITH SYMBOLS OR KEYED NOTES. ANY CHANGES RESULTING FROM FAILURE TO INSTALL THE MECHANICAL SYSTEM WITHOUT USING THE INCLUDED DETAILS SHALL BE THE RESPONSIBILITY OF THE CONTRACTOR.
12. ALL EQUIPMENT SHALL BE INDEPENDENTLY SUPPORTED FROM STRUCTURAL MEMBERS. STRUCTURAL ELEMENTS SHOWN IN DETAILS MAY OR MAY NOT PERTAIN TO ANY PORTION OF THE BUILDING. COORDINATE ALL MOUNTING REQUIREMENTS WITH ARCHITECTURAL & STRUCTURAL DRAWINGS AND SPECIFICATIONS.
13. ALL MECHANICAL COMPONENTS AND EQUIPMENT SHALL BE INSTALLED IN ACCORDANCE WITH ALL MANUFACTURER RECOMMENDATIONS.
14. ALL SIMILAR EQUIPMENT SHALL BE OF THE SAME MANUFACTURER. AIR INLETS & OUTLETS OF SIMILAR TYPES SHALL BE OF THE SAME MANUFACTURER.
15. ANY PART OF THE MECHANICAL INSTALLATION THAT FAILS, IS DEEMED UNFIT, OR BECOMES DAMAGED DURING CONSTRUCTION SHALL BE REPAIRED OR REPLACED BY THE CONTRACTOR AT NO ADDITIONAL COST TO THE OWNER. THE CONTRACTOR SHALL BE RESPONSIBLE FOR EQUIPMENT CHECK-IN, SAFEKEEPING, & DAMAGE.
16. COORDINATE WITH ARCHITECTURAL REFLECTED CEILING PLAN FOR EXACT LOCATION OF ALL CEILING DIFFUSERS & GRILLES.
17. CONTRACTOR SHALL OPERATE INSTALLED &/OR MODIFIED SYSTEMS & DEMONSTRATE ALL ASPECTS OF THE SYSTEM TO THE ENGINEER &/OR OWNER TO PROVE ALL ASSOCIATED SYSTEMS ARE OPERATIONAL.
18. DURING CONSTRUCTION THE CONTRACTOR SHALL MAINTAIN A SET OF AS-BUILT REDLINED RECORD DRAWINGS AT THE PROJECT SITE. ALL CHANGES OR DEVIATIONS IN LAYOUT, ROUTING, EQUIPMENT, COMPONENTS, & ACCESSORIES SHALL BE RECORDED. THESE REDLINED DRAWINGS SHALL BE GIVEN TO THE ARCHITECT / ENGINEER AFTER THE FINAL INSPECTION IN ACCORDANCE WITH PROJECT SPECIFICATIONS.
19. ALL DUCT ELBOWS SHALL BE LONG RADIUS, UNLESS NOTED OTHERWISE.

DEFINITIONS

NOTE: ALL DEFINITIONS MAY NOT BE USED.

INDICATED: THE TERM "INDICATED" REFERS TO GRAPHIC REPRESENTATIONS, NOTES, OR SCHEDULES ON THE DRAWINGS, OTHER PARAGRAPHS OR SCHEDULES IN THE SPECIFICATIONS, AND SIMILAR REQUIREMENTS IN THE CONTRACT DOCUMENTS. WHERE TERMS SUCH AS "SHOWN", "NOTED", "SCHEDULED", AND "SPECIFIED" ARE USED, IT IS TO HELP THE READER LOCATE THE REFERENCE, NO LIMITATION ON LOCATION IS INTENDED.

DIRECTED: TERMS SUCH AS "DIRECTED", "REQUESTED", AUTHORIZED", "SELECTED", "APPROVED", "REQUIRED", AND "PERMITTED" MEAN "DIRECTED BY THE ENGINEER", "REQUESTED BY THE ENGINEER", AND SIMILAR PHRASES.

APPROVED: THE TERM "APPROVED", WHERE USED IN CONJUNCTION WITH THE ENGINEER'S ACTION ON THE CONTRACTOR'S SUBMITTALS, APPLICATIONS, AND REQUESTS, IS LIMITED TO THE ENGINEER'S DUTIES AND RESPONSIBILITIES AS STATED IN GENERAL AND SUPPLEMENTARY CONDITIONS.

FURNISH: THE TERM "FURNISH" IS USED TO MEAN "SUPPLY AND DELIVER TO THE PROJECT SITE, READY FOR UNLOADING, UNPACKING, ASSEMBLY, INSTALLATION, AND SIMILAR OPERATIONS."

INSTALL: THE TERM "INSTALL" IS USED TO DESCRIBE OPERATIONS AT PROJECT SITE INCLUDING THE ACTUAL "UNLOADING, UNPACKING, ASSEMBLY, ERECTION, PLACING, ANCHORING, APPLYING, WORKING TO DIMENSION, FINISHING, CURING, PROTECTING, CLEANING, AND SIMILAR OPERATIONS."

PROVIDE: THE TERM "PROVIDE" MEANS "TO FURNISH AND INSTALL, COMPLETE AND READY FOR THE INTENDED USE."

INSTALLER: AN "INSTALLER" IS THE CONTRACTOR OR AN ENTITY ENGAGED BY THE CONTRACTOR, EITHER AS AN EMPLOYEE, SUBCONTRACTOR, OR SUB-SUBCONTRACTOR, FOR PERFORMANCE OF A PARTICULAR CONSTRUCTION ACTIVITY, INCLUDING INSTALLATION, ERECTION, APPLICATION, AND SIMILAR OPERATIONS. INSTALLERS ARE REQUIRED TO BE EXPERIENCED IN THE OPERATIONS THEY ARE ENGAGED TO PERFORM.

MECHANICAL SHEET INDEX

SPECTRUM ENGINEERS
324 S. State St., Suite 400
Salt Lake City, UT 84111
800-678-7077
801-328-5151
fax: 801-328-5155
www.spectrum-engineers.com

ENGINEER STAMP

PROFESSIONAL ENGINEER
STEVEN SHEPHERD
NO. 189989
STATE OF UTAH

10-08-2024

KCC STORES WAREHOUSE

2010 N. RULON WHITE BLVD.
FARR WEST, UT
84404

Mark:	Date:	Description

ISSUE: PERMIT SUBMITTAL
DATE: 12 NOVEMBER 2024

SPECTRUM PROJECT NO: 244022
DRAWN BY: DTS
CHECKED BY: AJB
DESIGNED BY: AJB
RECORD DRAWING DATE:
SIGNATURE:

SHEET TITLE

MECHANICAL COVER SHEET

M-001

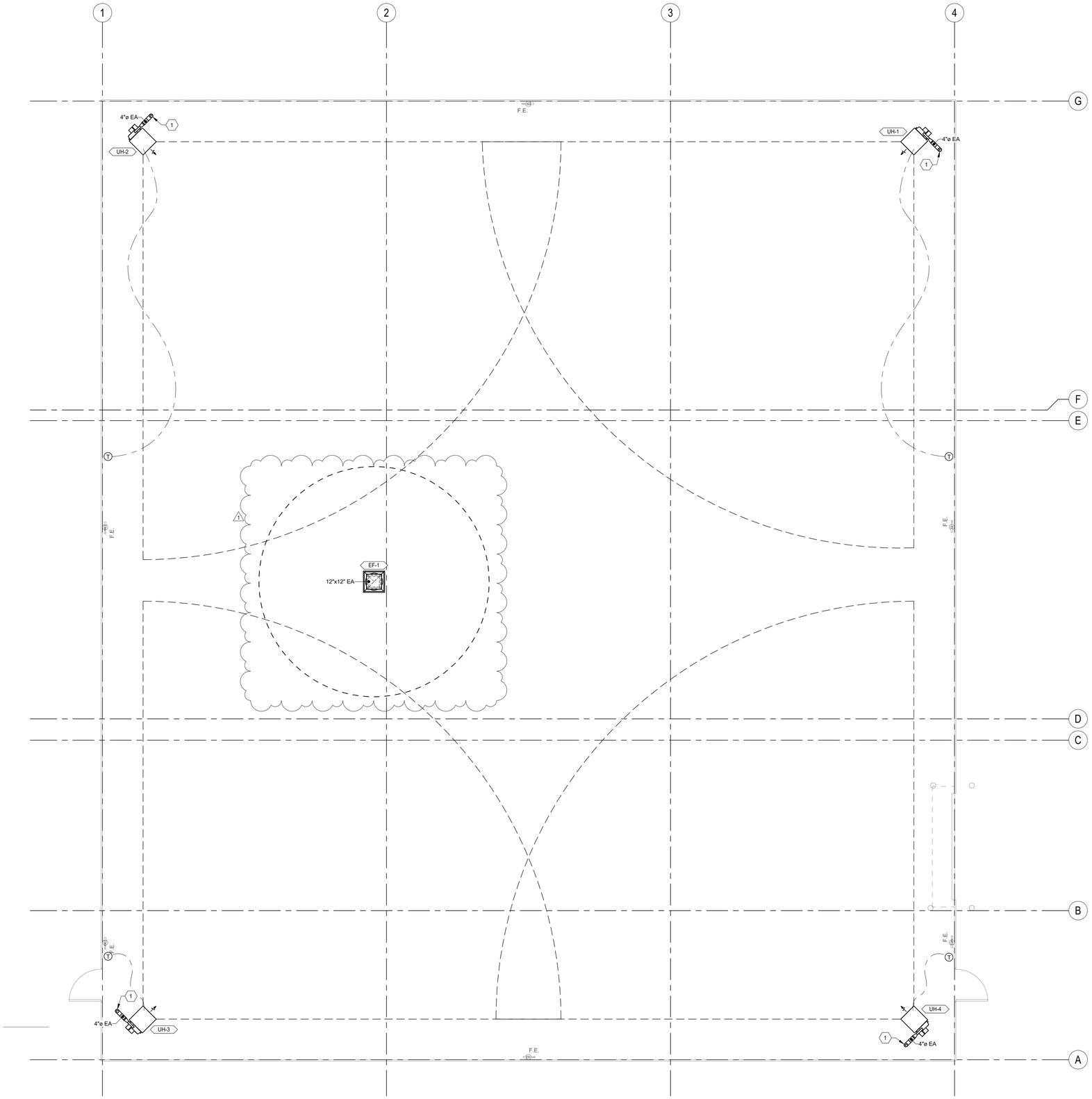

A1 LEVEL 1 MECHANICAL PLAN
SCALE: 1/4" = 1'-0"

MECHANICAL GENERAL NOTES

1. ALL EQUIPMENT TO BE SELECTED BASED OFF OF SITE INFORMATION, INCLUDING CURBS EQUAL TO OR GREATER THAN DESIGN SNOW DEPTH. ELEVATION: 4400' WDB: 5F DESIGN SNOW DEPTH: 18"
2. THIS CONTRACTOR SHALL CLOSELY COORDINATE MECHANICAL AND PLUMBING WITH ELECTRICAL, ARCHITECTURAL, AND BUILDING STRUCTURE.
3. COORDINATE EXACT THERMOSTAT LOCATIONS WITH FURNITURE AND OWNER. FAILURE TO DO SO MAY REQUIRE MOVING THERMOSTATS AT CONTRACTORS COST.
4. CONTRACTOR SHALL FIELD VERIFY EXISTING FIELD CONDITIONS PRIOR TO ORDERING OR FABRICATING. ADDITIONAL COST WILL NOT BE ALLOWED FOR CONTRACTOR'S FAILURE TO BECOME FAMILIAR WITH EXISTING SITE CONDITIONS.
5. PROVIDE FACTORY AUTHORIZED STARTUP OF ALL EQUIPMENT INCLUDING STARTUP OF ANY FACTORY CONTROLS TO ENSURE PROPER SEQUENCING AND/OR COMMUNICATION TO BMS.
6. PROVIDE OPERATION AND MAINTENANCE MANUALS (O&M) WITHIN 30 DAYS OF CERTIFICATE OF OCCUPANCY FOR ALL EQUIPMENT IN DIGITAL FORMAT TO ENGINEER FOR REVIEW. O&M'S SHALL INCLUDE DOCUMENTATION OF ALL WARRANTIES, REPORTS AND TESTS, RECORD DRAWINGS, CONTROLS SEQUENCE OF OPERATIONS WITH DIAGRAMS, & EQUIPMENT INFORMATION. EQUIPMENT INFORMATION INCLUDES MAKE & MODEL, WIRING, PIPING, STARTUP, SHUTDOWN, TROUBLE SHOOTING SYSTEM AND MAINTENANCE PROCEDURES.
7. WHERE JURISDICTION REQUIRES, CONTRACTOR IS RESPONSIBLE FOR PROVIDING SEISMIC RESTRAINT AND SUPPORT ENGINEERED BY A LICENSED STRUCTURAL ENGINEER. PROVIDE DESIGN DRAWINGS TO AUTHORITY HAVING JURISDICTION AND MECHANICAL ENGINEER FOR REVIEW.

SHEET KEYNOTES

1 VENT TO ROOF.

SPECTRUM ENGINEERS
324 S. State St., Suite 400
Salt Lake City, UT 84111
800-678-7077
801-328-5151
fax: 801-328-5155
www.spectrum-engineers.com

ENGINEER STAMP

PROFESSIONAL ENGINEER
STEVEN SHEPHERD
NO. 189989
STATE OF UTAH

10-08-2024

KCC STORES WAREHOUSE

2010 N. RULON WHITE BLVD.
FARR WEST, UT
84404

Mark:	Date:	Description
1	11/12/24	REV 1

ISSUE: PERMIT SUBMITTAL
DATE: 12 NOVEMBER 2024

SPECTRUM PROJECT NO: 244022
DRAWN BY: DTS
CHECKED BY: AJB
DESIGNED BY: AJB
RECORD DRAWING DATE:
SIGNATURE:

SHEET TITLE
LEVEL 1 MECHANICAL PLAN

M-101

HEATER SCHEDULE (GAS FIRED)

ACCEPTABLE MANUFACTURERS:
MODINE
REZNOR
DETROIT RADIANT
STERLING

REMARKS:
(1) PROVIDE WITH STAINLESS STEEL HEAT EXCHANGER.
(2) PROVIDE WITH HIGH ALTITUDE KIT.
(43) PROVIDE WITH FINGER PROOF FAN GUARD.

SCHEDULE KEY:
PLUMB = DIVISION 22
MECH = DIVISION 23
ELEC = DIVISION 26
MNFR = MANUFACTURER

LABEL	TYPE	MOUNTING HEIGHT (AFF)	HEATING CAPACITY AIRFLOW (CFM)	HEATING CAPACITY INPUT (BTUH)	HEATING CAPACITY OUTPUT (BTUH)	HEATING CAPACITY STAGES	AIR TEMP RISE (°F)	HEAT THROW	VENTING TYPE	VENTING SIZE	ELECTRICAL VOLTS	ELECTRICAL PHASE	ELECTRICAL Hz	ELECTRICAL MCA	ELECTRICAL MOCP	ELECTRICAL EMERG POWER	DISCONNECT PROVIDED BY (MECH/ ELEC)	WEIGHT (LBS)	MANUFACTURER	MODEL	REMARKS
UH-1	HORIZONTAL FLOW	14' - 0"	1,650	85,000	79,050	1	70	38'	DOUBLE WALL B VENT	4"	120	1	60	5	15	NO	ELEC	125	MODINE	PTC85AS0111	ALL
UH-2	HORIZONTAL FLOW	14' - 0"	1,650	85,000	79,050	1	70	38'	DOUBLE WALL B VENT	4"	120	1	60	5	15	NO	ELEC	125	MODINE	PTC85AS0111	ALL
UH-3	HORIZONTAL FLOW	14' - 0"	1,650	85,000	79,050	1	70	38'	DOUBLE WALL B VENT	4"	120	1	60	5	15	NO	ELEC	125	MODINE	PTC85AS0111	ALL
UH-4	HORIZONTAL FLOW	14' - 0"	1,650	85,000	79,050	1	70	38'	DOUBLE WALL B VENT	4"	120	1	60	5	15	NO	ELEC	125	MODINE	PTC85AS0111	ALL

EXHAUST FAN SCHEDULE

ACCEPTABLE MANUFACTURERS:
PENN BARRY
LOREN COOK
TWIN CITY
GREENHECK
BROAN
PANASONIC

CONTROLS:
(A) PROVIDE TIME CLOCK AND RUN CONTINUOUSLY DURING BUSINESS HOURS.
(B) PROVIDE WITH SWITCH FOR ON/OFF SWITCH OPERATION.

REMARKS:
(1) PROVIDE WITH BACKDRAFT DAMPER, DISCONNECT SWITCH, SUPPORT BRACKETS AND ISOLATOR, FLEXIBLE CONNECTION, AND BELT TENSIONER.
(2) PROVIDE VARIABLE SPEED CONTROLLER FOR ALL DIRECT DRIVE FANS. TEST AND BALANCE CONTRACTOR SHALL MARK BALANCED POSITION ON CONTROLLER.
(3) PROVIDE EC MOTOR VARIABLE SPEED FAN.
(4) PROVIDE FACTORY AUTHORIZED STARTUP OF EQUIPMENT INCLUDING STARTUP OF ANY FACTORY CONTROLS TO ENSURE PROPER SEQUENCING AND/OR COMMUNICATION TO BMS.

SCHEDULE KEY
PLUMB = DIVISION 22
MECH = DIVISION 23
ELEC = DIVISION 26
MNFR = MANUFACTURER

LABEL	SERVES	TYPE	CFM	ESP (IN-WC)	FAN RPM	ELECTRICAL VOLTS	ELECTRICAL PHASE	ELECTRICAL Hz	ELECTRICAL HP	ELECTRICAL EMERG POWER	DISCONNECT PROVIDED BY (MECH/ELEC)	CONTROL METHOD	SOUND RATING	WEIGHT (LBS)	MANUFACTURER	MODEL	REMARKS
EF-1	WAREHOUSE	DOWNBLAST	500	0.75	1725	120	1	60	1/3	NO	ELEC	A	11	41	LOREN COOK	101 ACED	ALL

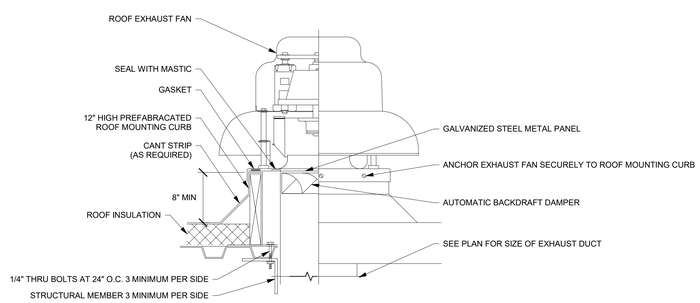

A3 ROOF EXHAUST FAN
SCALE: 1/8" = 1'-0"

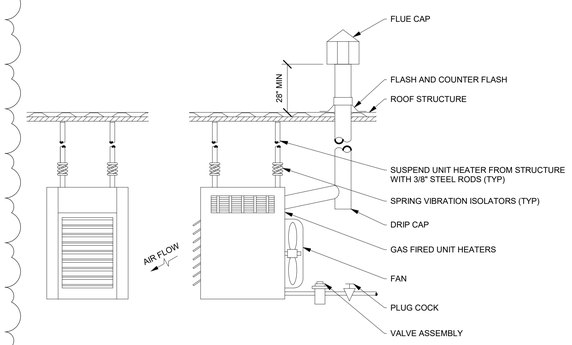

A5 UNIT HEATER GAS FIRED DETAIL
SCALE: 1/8" = 1'-0"

SPECTRUM ENGINEERS
324 S. State St., Suite 400
Salt Lake City, UT 84111
800-678-7077
801-328-5151
fax: 801-328-5155
www.spectrum-engineers.com

ENGINEER STAMP

10-08-2024

KCC STORES WAREHOUSE

2010 N. RULON WHITE BLVD.
FARR WEST, UT
84404

Mark:	Date:	Description
1	11/12/24	REV 1

ISSUE: PERMIT SUBMITTAL
DATE: 12 NOVEMBER 2024

SPECTRUM PROJECT NO: 244022
DRAWN BY: DTS
CHECKED BY: AJB
DESIGNED BY: AJB
RECORD DRAWING DATE:
SIGNATURE:

SHEET TITLE
MECHANICAL DETAILS & SCHEDULES

M-501

SYMBOL LEGEND - MISC

REFERENCE LINES AND SYMBOLS

SYMBOL	DESCRIPTION
	VIEW OR DETAIL INDICATOR: # INDICATES DETAIL NUMBER, SHEET INDICATES DRAWING SHEET WHERE VIEW OR DETAIL IS SHOWN.
	ELEVATION OR SECTION INDICATOR: # INDICATES VIEW NUMBER, SHEET INDICATES DRAWING SHEET WHERE VIEW IS SHOWN.
NAME 000	ROOM / SPACE INDICATOR
#	KEYNOTE INDICATOR
#	REVISION INDICATOR
XX-##	PLUMBING FIXTURE INDICATOR
XX-##	EQUIPMENT INDICATOR
TAG CFM	REGISTER, GRILLE, OR DIFFUSER INDICATOR
OR	BREAKLINE
MATCH LINE SEE XX/XXX	MATCHLINE INDICATOR
	CONTRACT LIMIT LINE: DASHDOT, WIDE LINE
	NEW CONNECTION TO EXISTING
	POINT OF DEMOLITION

SYMBOL LEGEND - PIPING

NOTE: ALL ABBREVIATIONS MAY NOT BE USED.

SYMBOL	DESCRIPTION
	HOSE BIBB / WALL HYDRANT
	CLEANOUT TO GRADE
	FLOOR CLEANOUT
	WALL CLEANOUT
	FLOOR DRAIN
	FLOOR SINK

DEFINITIONS

NOTE: ALL DEFINITIONS MAY NOT BE USED.

INDICATED: THE TERM "INDICATED" REFERS TO GRAPHIC REPRESENTATIONS, NOTES, OR SCHEDULES ON THE DRAWINGS, OTHER PARAGRAPHS OR SCHEDULES IN THE SPECIFICATIONS, AND SIMILAR REQUIREMENTS IN THE CONTRACT DOCUMENTS. WHERE TERMS SUCH AS "SHOWN", "NOTED", "SCHEDULED", AND "SPECIFIED" ARE USED, IT IS TO HELP THE READER LOCATE THE REFERENCE, NO LIMITATION ON LOCATION IS INTENDED.

DIRECTED: TERMS SUCH AS "DIRECTED", "REQUESTED", AUTHORIZED", "SELECTED", "APPROVED", "REQUIRED", AND "PERMITTED" MEAN "DIRECTED BY THE ENGINEER", "REQUESTED BY THE ENGINEER", AND SIMILAR PHRASES.

APPROVED: THE TERM "APPROVED", WHERE USED IN CONJUNCTION WITH THE ENGINEER'S ACTION ON THE CONTRACTOR'S SUBMITTALS, APPLICATIONS, AND REQUESTS, IS LIMITED TO THE ENGINEER'S DUTIES AND RESPONSIBILITIES AS STATED IN GENERAL AND SUPPLEMENTARY CONDITIONS.

FURNISH: THE TERM "FURNISH" IS USED TO MEAN "SUPPLY AND DELIVER TO THE PROJECT SITE, READY FOR UNLOADING, UNPACKING, ASSEMBLY, INSTALLATION, AND SIMILAR OPERATIONS."

INSTALL: THE TERM "INSTALL" IS USED TO DESCRIBE OPERATIONS AT PROJECT SITE INCLUDING THE ACTUAL "UNLOADING, UNPACKING, ASSEMBLY, ERECTION, PLACING, ANCHORING, APPLYING, WORKING TO DIMENSION, FINISHING, CURING, PROTECTING, CLEANING, AND SIMILAR OPERATIONS."

PROVIDE: THE TERM "PROVIDE" MEANS "TO FURNISH AND INSTALL, COMPLETE AND READY FOR THE INTENDED USE."

INSTALLER: AN "INSTALLER" IS THE CONTRACTOR OR AN ENTITY ENGAGED BY THE CONTRACTOR, EITHER AS AN EMPLOYEE, SUBCONTRACTOR, OR SUB-SUBCONTRACTOR, FOR PERFORMANCE OF A PARTICULAR CONSTRUCTION ACTIVITY, INCLUDING INSTALLATION, ERECTION, APPLICATION, AND SIMILAR OPERATIONS. INSTALLERS ARE REQUIRED TO BE EXPERIENCED IN THE OPERATIONS THEY ARE ENGAGED TO PERFORM.

PIPING LEGEND

NOTE: ALL ABBREVIATIONS MAY NOT BE USED.

ABBREVIATION	DESCRIPTION
160	160°F HOT WATER
160R	160°F HOT WATER RETURN / CIRCULATION
180	180°F HOT WATER
180R	180°F HOT WATER RETURN / CIRCULATION
AW	ACID WASTE
AV	ACID VENT
CO2	CARBON DIOXIDE
CWV	COMBINATION WASTE AND VENT
CA	COMPRESSED AIR
CD	CONDENSATE DRAIN
DCW	DOMESTIC COLD WATER
DHW	DOMESTIC HOT WATER
DHWR	DOMESTIC HOT WATER RECIRCULATION
DI	DEIONIZED WATER
DSW	DOMESTIC SOFT WATER
	DEMOLISHED PIPING
FP	FIRE PROTECTION
FOR	FUEL OIL RETURN
FOS	FUEL OIL SUPPLY
FOV	FUEL OIL VENT
GW	GREASE WASTE
HPC	HIGH PRESSURE CONDENSATE
MPC	MEDIUM PRESSURE CONDENSATE
LPC	LOW PRESSURE CONDENSATE
ICW	INDUSTRIAL COLD WATER
IHW	INDUSTRIAL HOT WATER
IW	IRRIGATION WATER
LPG	LIQUID PROPANE GAS
MA	MEDICAL AIR
NG	NATURAL GAS
NO	NITROUS OXIDE
O	OXYGEN
OD	OVERFLOW ROOF DRAIN / STORM DRAIN
PC	PUMPED CONDENSATE
RD	ROOF DRAIN / STORM DRAIN
SS	SANITARY SEWER
VAC	VACUUM
V	VENT

SYMBOL LEGEND - PIPING

NOTE: ALL ABBREVIATIONS MAY NOT BE USED.

SYMBOL	DESCRIPTION
	SHUT OFF VALVE
	GATE VALVE
	CHECK VALVE
	AUTOMATIC 2-WAY VALVE
	AUTOMATIC 3-WAY VALVE
	GLOBE VALVE
	BALL VALVE
	RELIEF VALVE
	PRESSURE REDUCING VALVE
	BUTTERFLY VALVE
	SOLENOID VALVE
	ANGLE VALVE
	VENTURI VALVE
	BALANCING OR PLUG COCK
	FLOW SETTER
	EXPANSION VALVE
	GAS COCK
MAV	MANUAL AIR VENT
	STRAINER
	GAUGE COCK
	FLEXIBLE CONNECTION
	PRESSURE GAUGE
	THERMOMETER
	PIPE REDUCER
	REFRIGERANT SITE GLASS
	REFRIGERANT STRAINER
	REFRIGERANT FILTER DRIER
	90 DEGREE ELBOW UP
	90 DEGREE ELBOW DOWN
	90 DEGREE TEE UP
	90 DEGREE TEE DOWN
	PIPE UNION
	PIPE CAP
	PIPE ANCHOR
	FLOAT AND THERMOSTATIC TRAP

ABBREVIATIONS

NOTE: ALL ABBREVIATIONS MAY NOT BE USED.

(E)	EXISTING
(F)	FUTURE
AC	AIR CONDITION(-ING,-ED)
APD	AIR PRESSURE DROP
BD	BALANCING DAMPER
BHP	BRAKE HORSE POWER
BTU	BRITISH THERMAL UNIT
BTUH	BTU/HOUR
CFH	CUBIC FEET PER HOUR
CFM	CUBIC FEET PER MINUTE
CV	CONTROL VALVE
DB	DRY BULB TEMPERATURE
DCW	DOMESTIC COLD WATER
DHW	DOMESTIC HOT WATER
DHWR	DOMESTIC HOT WATER RECIRC
DP	DEPTH, DEEP, OR DROP IN PRESSURE
EA	EXHAUST AIR
EER	ENERGY EFFICIENCY RATIO
EFF	EFFICIENCY
ELEC	ELECTRIC
ELEV	ELEVATION
ENT	ENTERING
EVAP	EVAPORAT(-E, -ING, -ED, -OR)
EWT	ENTERING WATER TEMPERATURE
EXT	EXTERNAL
FD	FIRE DAMPER
FLA	FULL LOAD AMPS
FPI	FINS PER INCH
FPM	FEET PER MINUTE
FPS	FEET PER SECOND
FSD	FIRE SMOKE DAMPER
GE	GREASE EXHAUST
GPH	GALLONS PER HOUR
GPM	GALLONS PER MINUTE
HD	HEAD
HG	MERCURY
HP	HORSEPOWER
HR	HOUR
HTG	HEATING
HZ	HERTZ (FREQUENCY)
IN	INCH
KW	KILOWATT
LAT	LEAVING AIR TEMPERATURE
LBS	POUNDS
LH	LATENT HEAT
LRA	LOCKED ROTOR AMPS
LVG	LEAVING
LWT	LEAVING WATER TEMPERATURE
MBH	THOUSAND BTU PER HOUR
MCA	MINIMUM CIRCUIT AMPS
MFR	MANUFACTUR(-ER, -ED)
NC	NORMALLY CLOSED OR NOISE CRITERIA
NIC	NOT IN CONTRACT
NO	NORMALLY OPEN
NPSH	NET POSITIVE SUCTION HEAD
NTS	NOT TO SCALE
OA	OUTSIDE AIR
OD	OUTSIDE DIAMETER
OZ	OUNCE
PD	PRESSURE DROP OR DIFFERENCE
PG	PROPOLENE GLYCOL
PH	PHASE
PPM	PARTS PER MILLION
PSF	POUNDS PER SQUARE FOOT
PSI	POUNDS PER SQUARE INCH
PSIA	PSI ABSOLUTE
PSIG	PSI GAUGE
RA	RETURN AIR
RECIRC	RECIRCULATE (-ER, -ED, -ING)
REFR	REFRIGERATION
REQD	REQUIRED
RLA	RATED LOAD AMPS
RPM	REVOLUTIONS PER MINUTE
SA	SUPPLY AIR
SCFM	STANDARD CUBIC FEET PER MINUTE
SCW	SOFT COLD WATER
SH	SENSIBLE HEAT
SP	STATIC PRESSURE
SPEC(S)	SPECIFICATION(S)
SQ	SQUARE
SS	SANITARY SEWER, SOIL, WASTE
STD	STANDARD
TA	TRANSFER AIR
TD	TEMP. DROP OR DIFF.
TEMP	TEMPERATURE
TOT	TOTAL
TSTAT	THERMOSTAT
TYP	TYPICAL
V	VOLT, VOLTAGE OR VENT
VAC	VACUUM
VAV	VARIABLE AIR VOLUME
VEL	VELOCITY
VENT	VENT, VENTILATION
VERT	VERTICAL
VFD	VARIABLE FREQUENCY DRIVE
VOL	VOLUME
VTR	VENT THROUGH ROOF
WB	WET BULB TEMP
WC	WATER COLUMN
WG	WATER GAUGE
WPD	WATER PRESSURE DROP
WTR	WATER

PLUMBING GENERAL NOTES

1. THE PLUMBING DRAWINGS SHOW THE GENERAL DESIGN, ARRANGEMENT AND EXTENT OF THE PLUMBING SYSTEM. BECAUSE OF THE SMALL SCALE OF THE DRAWINGS, THESE DRAWINGS DO NOT SHOW ALL OFFSETS, BENDS OR ELBOWS NECESSARY FOR THE COMPLETE INSTALLATION IN THE SPACE PROVIDED. CONTRACTOR SHALL MAKE SUCH SLIGHT ALTERATIONS AS MAY BE NECESSARY TO MAKE THE SYSTEM COMPLETE AND OPERATIONAL IN ACCORDANCE WITH THE DESIGN INTENT. MAJOR DEVIATIONS SUCH AS CHANGES IN COMPONENT SIZES, WEIGHTS, QUANTITIES OR MATERIAL REQUIRE PRIOR APPROVAL BY THE DESIGN ENGINEER.
2. THE DRAWINGS AND SPECIFICATIONS HAVE BEEN PREPARED TO SUPPLEMENT EACH OTHER AND SHALL BE INTERPRETED AS AN INTEGRAL UNIT WITH THE ITEMS SHOWN ON ONE AND NOT THE OTHER BEING FURNISHED AND INSTALLED AS THOUGH SHOWN AND CALLED OUT IN BOTH.
3. THE ENTIRE PLUMBING INSTALLATION SHALL CONFORM TO THE REQUIREMENTS OF THE MOST RECENTLY ADOPTED BUILDING CODES, MECHANICAL CODE, PLUMBING CODE, ELECTRICAL CODE, AND ALL OTHER APPLICABLE CITY, COUNTY, STATE, AND FEDERAL CODES AND REGULATIONS IN EFFECT.
4. THE ENTIRE PLUMBING INSTALLATION SHALL CONFORM TO ANY CODES, RULES, REGULATIONS AND REQUIREMENTS OF THE BUILDING OWNER.
5. PRIOR TO FABRICATION AND INSTALLATION OF ANY PLUMBING COMPONENT THE CONTRACTOR SHALL COORDINATE THE INSTALLATION OF ALL PLUMBING WORK WITH ALL OTHER BUILDING TRADES, INCLUDING BUILDING TRADES HIRED DIRECTLY BY THE OWNER. WHERE CONFLICTS MAY OCCUR, THEY SHALL BE RESOLVED PRIOR TO INSTALLATION.
6. ALL PLUMBING INFORMATION IS NOT SHOWN ON THE PLUMBING DRAWINGS. THE CONTRACTOR SHALL BE RESPONSIBLE FOR COORDINATING ALL INFORMATION ON ALL OTHER CONSTRUCTION DOCUMENTS.
7. THE CONTRACTOR SHALL BE RESPONSIBLE TO REVIEW AND USE, WHERE APPROPRIATE, ALL THE PLUMBING DETAILS SHOWN ON THE DRAWINGS. DETAILS MAY OR MAY NOT BE CALLED OUT ON THE DRAWINGS WITH SYMBOLS OR KEYED NOTES. ANY CHANGES RESULTING FROM FAILURE TO INSTALL THE PLUMBING SYSTEM WITHOUT USING THE INCLUDED DETAILS SHALL BE THE RESPONSIBILITY OF THE CONTRACTOR.
8. ANY PART OF THE PLUMBING INSTALLATION THAT FAILS, IS UNFIT, OR BECOMES DAMAGED DURING CONSTRUCTION SHALL BE REPAIRED OR REPLACED BY THE CONTRACTOR AT NO ADDITIONAL COST TO THE OWNER.
9. PROVIDE PROPER PROVISIONS FOR EXPANSION, CONTRACTION, OR MOVEMENT OF ALL PIPING.
10. PROVIDE LARGE ENOUGH PIPE SLEEVES THROUGH WALL OR FLOOR TO ALLOW FOR ANTICIPATED DIFFERENTIAL MOVEMENT.
11. ALL PIPING SHALL BE SUPPORT WITH CLEVIS HANGERS (MSS TYPE 1). PERFORATED METAL STRAPS OR PLASTIC STRAPPING (PLUMBER TAPE) SHALL NOT BE USED TO SUPPORT OR BRACE ANY PIPE.
12. PROVIDE PIPE HANGERS WITHIN 18-INCHES OF ALL CHANGES OF DIRECTION.
13. PROVIDE SWAY BRACING FOR ALL PIPING 4" AND LARGER AT ALL CHANGES IN DIRECTION GREATER THAN 45-DEGREES.
14. ALL STEEL CLEVIS HANGERS USED TO SUPPORT COPPER PIPING SHALL BE COPPER OR PLASTIC COATED.
15. COPPER PIPING SHALL NOT COME IN CONTACT WITH FIRE TREATED LUMBER. PROVIDE ½" THICK SLIP-ON CLOSED CELL INSULATION WHERE COPPER PIPING IS ADJACENT TO FIRE TREATED LUMBER. CLOSED CELL INSULATION SHALL EXTEND A MINIMUM OF 1-1/2" PAST LUMBER.
16. ALL EXPOSED PIPING SHALL BE INSTALLED IN A NEATLY ARRANGED MANNER PARALLEL TO THE BUILDING STRUCTURE.
17. ALL EXPOSED DOMESTIC WATER PIPE IN OCCUPIED SPACES SHALL BE POLISHED CHROME PLATED.
18. ALL EXPOSED DRAINAGE PIPING IN OCCUPIED SPACES INCLUDING TRAPS UNDER SINKS SHALL BE POLISHED CHROME PLATED.
19. DRAWINGS SHOW GENERAL ARRANGEMENT OF THE DRAIN WASTE AND VENT SYSTEM WITH THE REQUIRED CLEANOUTS. CONTRACTOR SHALL PROVIDE ALL ADDITIONAL CLEANOUTS AS REQUIRED BY THE PLUMBING CODE.
20. ALL SANITARY DRAINAGE SYSTEM PIPING 3" AND LARGER SHALL BE SLOPED IN DIRECTION OF FLOW AT A MINIMUM OF 1/8" PER FOOT.
21. ALL SANITARY DRAINAGE SYSTEM PIPING SMALLER THAN 3" SHALL BE SLOPED IN DIRECTION OF FLOW AT A MINIMUM OF 1/4" PER FOOT.
22. SLOPE VENT SYSTEM TOWARDS DRAINAGE SYSTEM.
23. SIMILAR EQUIPMENT SHALL BE OF THE SAME MANUFACTURER.
24. ALL EQUIPMENT SHALL PROVIDE THE SCHEDULED PERFORMANCE AT THE JOB SITE ELEVATION.
25. FIXTURE AND EQUIPMENT MODEL NUMBERS SHOWN IN PLUMBING FIXTURE SCHEDULE AND PLUMBING EQUIPMENT SCHEDULE ARE SHOWN TO ESTABLISH THE TYPE OF PRODUCT THAT SHALL BE USED. THE SELECTED PRODUCT SHALL MEET THE SCHEDULED PERFORMANCE DATA SHOWN ON THE SCHEDULE EVEN IF A DIFFERENT MODEL IS SUPPLIED THAT IS DIFFERENT THAN THAT SCHEDULED.
26. ALL EQUIPMENT SHALL BE INSTALLED IN STRICT ACCORDANCE WITH THE EQUIPMENT MANUFACTURER'S INSTALLATION INSTRUCTIONS. PROVIDE ALL NECESSARY FITTINGS, TRANSITIONS, VALVES AND OTHER DEVICES AND ACCESSORIES REQUIRED FOR A COMPLETE, WORKABLE INSTALLATION.
27. SEE "PLUMBING FIXTURE SCHEDULE" FOR INDIVIDUAL TRAPS, WASTE, VENT, AND DOMESTIC WATER PIPING FOR INDIVIDUAL FIXTURES.
28. ALL PLUMBING EQUIPMENT SHALL BE LISTED AND LABELED BY AN APPROVED TESTING AGENCY.
29. FIXTURES, EQUIPMENT AND PIPING INSTALLATION SHALL MEET NSF STANDARDS.

PLUMBING SHEET INDEX

SPECTRUM ENGINEERS
324 S. State St., Suite 400
Salt Lake City, UT 84111
800-678-7077
801-328-5151
fax: 801-328-5155
www.spectrum-engineers.com

ENGINEER STAMP

PROFESSIONAL ENGINEER
STEVEN SHEPHERD
NO. 189989
STATE OF UTAH

10-08-2024

KCC STORES WAREHOUSE

2010 N. RULON WHITE BLVD.
FARR WEST, UT
84404

Mark:	Date:	Description

ISSUE: PERMIT SUBMITTAL
DATE: 12 NOVEMBER 2024

SPECTRUM PROJECT NO: 244022
DRAWN BY: DTS
CHECKED BY: AJB
DESIGNED BY: AJB
RECORD DRAWING DATE:
SIGNATURE:

SHEET TITLE
PLUMBING COVER SHEET

P-001

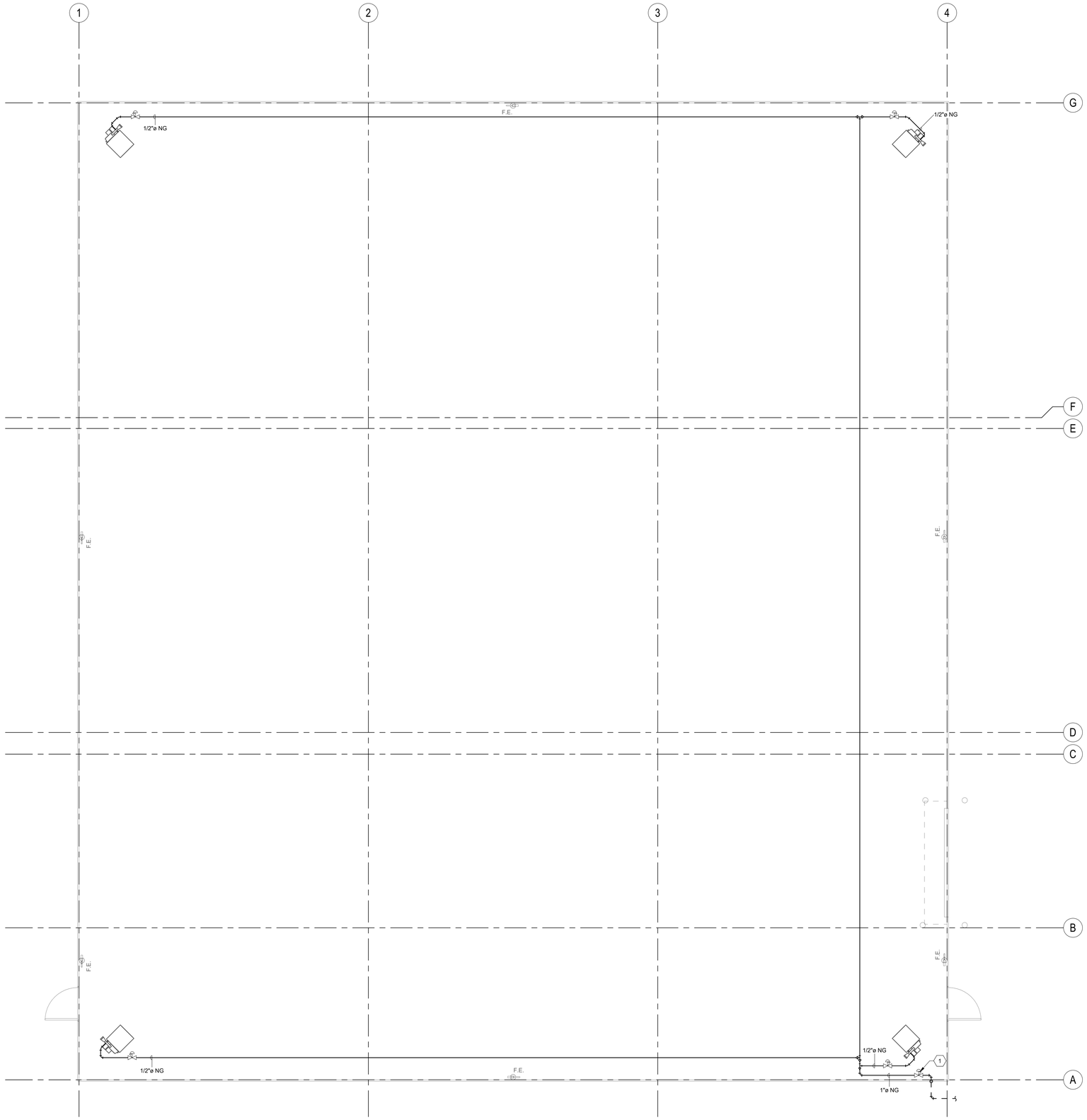

A1 LEVEL 1 PLUMBING PLAN
SCALE: 1/4" = 1'-0"

PLUMBING GENERAL NOTES

1. THE CONTRACTOR SHALL CLOSELY COORDINATE MECHANICAL AND PLUMBING WITH ELECTRICAL, ARCHITECTURAL, AND BUILDING STRUCTURE.
2. DISSIMILAR METAL PIPING CONNECTIONS SHALL HAVE DIELECTRIC ISOLATORS.
3. ALL NATURAL GAS PIPING 2-1/2" AND OVER OR 5 PSI OR GREATER TO BE WELDED.
4. PROVIDE A MARINE TOPSIDE GREY PAINT ON ALL NEW GAS PIPING.
5. THE CONTRACTOR SHALL FIELD VERIFY EXISTING FIELD CONDITIONS PRIOR TO ORDERING OR FABRICATING. ADDITIONAL COST WILL NOT BE ALLOWED FOR CONTRACTOR'S FAILURE TO BECOME FAMILIAR WITH EXISTING SITE CONDITIONS.
6. PIPING SHALL NOT BE SUPPORTED FROM THE ROOF DECK, JOIST BRIDGING OR OTHER PIPES. HANG PIPES FROM BEAMS, JOIST OR SUPPLEMENTARY STRUCTURAL MEMBERS. WHERE POSSIBLE INSTALL ALL PIPING WITHIN 12" FROM SUPPORTING STRUCTURE.
7. WHERE JURISDICTION REQUIRES, THE CONTRACTOR IS RESPONSIBLE FOR PROVIDING SEISMIC RESTRAINT. PROVIDE DESIGN DRAWINGS TO AUTHORITY HAVING JURISDICTION AND MECHANICAL ENGINEER FOR REVIEW.
8. PLUMBING PIPING SCHEDULE:
   A. NATURAL GAS PIPING 2" AND SMALLER = SCHEDULE 40 BLACK STEEL PIPE - THREADED
   B. NATURAL GAS PIPING 2-1/2" AND LARGER = SCHEDULE 40 BLACK STEEL PIPE - WELDED
   C. NATURAL GAS PIPING BELOW GRADE = POLYETHYLENE PIPE - FUSION WELDED

SHEET KEYNOTES

1 GAS LINE TO CIVIL. PROVIDE 2 PSI REGULATOR.

SPECTRUM ENGINEERS
324 S. State St., Suite 400
Salt Lake City, UT 84111
800-678-7077
801-328-5151
fax: 801-328-5155
www.spectrum-engineers.com

ENGINEER STAMP

PROFESSIONAL ENGINEER
STEVEN SHEPHERD
NO. 189989
STATE OF UTAH
10-08-2024

KCC STORES WAREHOUSE

2010 N. RULON WHITE BLVD.
FARR WEST, UT
84404

Mark:	Date:	Description

ISSUE: PERMIT SUBMITTAL
DATE: 12 NOVEMBER 2024

SPECTRUM PROJECT NO: 244022
DRAWN BY: DTS
CHECKED BY: AJB
DESIGNED BY: AJB
RECORD DRAWING DATE:
SIGNATURE:

SHEET TITLE
LEVEL 1 PLUMBING PLAN

P-101

GAS PRESSURE REGULATOR SCHEDULE

ACCEPTABLE MANUFACTURERS:	REMARKS:
PIETRO FIORENTINI MAXITROL	(1) 2.0 PSIG INLET PRESSURE, 850 BTU PER C.F. (2) 4 OZ (7" W.C.) OUTLET PRESSURE (3) DIE CAST ALIMINUM BODY, NITRILE DIAPHRAGM (4) NPT THREADED INLET & OUTLET (5) BALL CHECK AUTOMATIC VENT LIMITING DEVICE

SYMBOL	LOCATION	MANUFACTURER	MODEL NUMBER	REGULATOR SIZE (INCHES)	CAPACITY (CFH)	NOTES
GPR	INDOOR / OUTDOOR	PF REGULATOR	F30051	1/2	**928**	**ALL**
			F30052	3/4	**1155**	
			F30053	1	**1501**	
			F3013	1-1/4	**7894**	

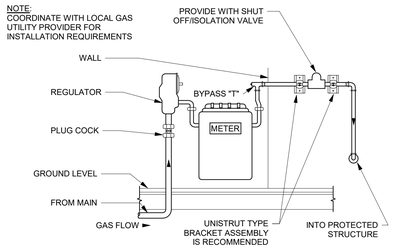

A3 GAS METER DETAIL
SCALE: 1/8" = 1'-0"

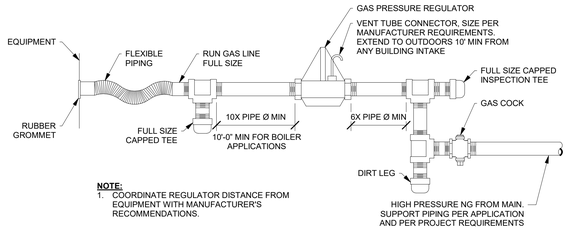

NOTE:
1. COORDINATE REGULATOR DISTANCE FROM EQUIPMENT WITH MANUFACTURER'S RECOMMENDATIONS.

A5 GAS PIPING REGULATOR
SCALE: 1/8" = 1'-0"

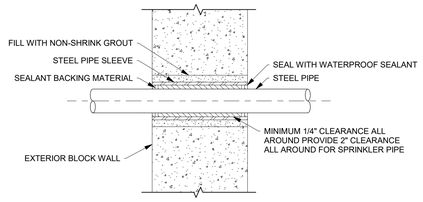

A7 PIPE SLEEVE THROUGH EXTERIOR WALL DETAIL
SCALE: 1/8" = 1'-0"

SPECTRUM ENGINEERS
324 S. State St., Suite 400
Salt Lake City, UT 84111
800-678-7077
801-328-5151
fax: 801-328-5155
www.spectrum-engineers.com

ENGINEER STAMP

PROFESSIONAL ENGINEER
STEVEN SHEPHERD
NO. 189989
STATE OF UTAH

10-08-2024

KCC STORES WAREHOUSE

2010 N. RULON WHITE BLVD.
FARR WEST, UT
84404

Mark:	Date:	Description

ISSUE: PERMIT SUBMITTAL
DATE: 12 NOVEMBER 2024

SPECTRUM PROJECT NO: 244022
DRAWN BY: DTS
CHECKED BY: AJB
DESIGNED BY: AJB
RECORD DRAWING DATE:
SIGNATURE:

SHEET TITLE
PLUMBING DETAILS & SCHEDULES

P-501

THIS PRINT IS IN BLACK & WHITE

FIRE ALARM							
	BELL	+94"	2.		HEAT DETECTOR	CEILING	
C	CHIME / STROBE	+94" / CEILING	2.		DUCT SMOKE DETECTOR		MTD. IN DUCT
F	FIRE ALARM MANUAL STATION	+46"	2.	D	FIRE/SMOKE DAMPER		
H	FIRE ALARM SIGNAL HORN / STROBE	+94" / CEILING	2.		DOOR HOLDER	AS NOTED	
E	FIRE ALARM SPEAKER / STROBE	+94" / CEILING	2.	FS	FLOW SWITCH		
S	FIRE ALARM STROBE	+94" / CEILING	2.	TS	TAMPER SWITCH		
K	FIRE ALARM SPEAKER ONLY	+94" / CEILING	2.	WF	WATER FLOOD INDICATOR		
B	FIRE ALARM STROBE WITH BLUE COLORED LENS (CO VISUAL ALARM)	+94" / CEILING	2.		O.S. & Y. VALVE		SEE DIAGRAM
ANN	FIRE ALARM ANNUNCIATOR PANEL	+58"	2. SEE DIAGRAM	R	FIRE ALARM RELAY OR SECURITY RELAY		
V	ASPIRATING SMOKE DETECTION SYSTEM	CEILING	MOUNT AS PER MFR.	CM	FIRE ALARM CONTROL MODULE		
B	BEAM DETECTOR		MOUNT AS PER MFR.	MM	FIRE ALARM MONITOR MODULE		
S	SMOKE DETECTOR	CEILING		TWZ	TWO-WAY COMMUNICATION SYSTEM CONTROL PANEL	+46"	2.
SC	SMOKE/CARBON MONOXIDE DETECTOR	CEILING		TW	TWO-WAY COMMUNICATION SYSTEM CALL STATION	+46"	2.
C	CARBON MONOXIDE DETECTOR	CEILING		R	FIRE ALARM RELAY		

SECURITY							
####	IP SURVEILLANCE CAMERA - SEE CAMERA SURVEILLANCE TYPE SCHEDULE	AS NOTED	9. 10. 12.	DH	MAGNETIC DOOR HOLD OPENER	AS NOTED	8. 12.
NVR	NETWORK VIDEO RECORDER / SERVER		12.	ES	ELECTRIFIED DOOR STRIKE	DOOR JAMB	8. 12.
DC 1	ACCESS CONTROL DOOR / WINDOW SWITCH / CONTACT	DOOR JAMB	12.	DP	INTRUSION DETECTION DOOR / WINDOW CONTACT	DOOR JAMB	12.
DC 2	SPECIALIZED SWITCH / CONTACT (GARAGE DOOR, ROOF ACCESS DOOR / HATCH)		12.	EL	ELECTRIFIED DOOR LOCK	DOOR JAMB	8. 12.
XX X	DR=DOOR RELEASE, LD=LOCKDOWN, PE=PUSH TO EXIT, DB=DURESS / PANIC. T=TRANSMITTER, R=RECEIVER, H=HARDWIRED		12.	RX	ACCESS CONTROL REQUEST TO EXIT MOTION		8. 12.
				EC	ELECTRIFIED EXIT RIM DEVICE (CRASH BAR)		8. 12.
MD MD	INTRUSION MOTION DETECTOR SOLID = WALL MOUNTED, DASHED = CEILING		12.	CR	ACCESS CONTROL CREDENTIAL CARD READER	+46"	1. 12.
GB GB	GLASS BREAK DETECTOR: SOLID = WALL MOUNTED, DASHED = CEILING		12.	BR	ACCESS CONTROL BIOMETRIC READER	+46"	1. 12.
AS AS	INTRUSION DETECTION ALARM SIREN AND/OR STROBE		12.	KS	KEY OVERRIDE SWITCH	+46"	1. 12.
PI	INTRUSION DETECTION POP-IT MODULE		12.	ICR	INTEGRATED LOCKSET WITH CREDENTIAL CARD READER		8. 12.
KP	INTRUSION DETECTION KEYPAD (ARM/DISARM)		12.	KCR	ACCESS CONTROL CREDENTIAL CARD READER WITH KEYPAD	+46"	1. 12.
INT	IP TWO-WAY AUDIO & VIDEO INTERCOM (ANSWERING BASE STATION & DOOR STATION)		12.	WS	SECURITY WORKSTATION		12.
ML	ELECTROMAGNETIC LOCK (MAG LOCK)		8. 12.	'ACS'	ACCESS CONTROL PANEL		12.
SC SC	SMOKE & C/O DETECTOR COMBO: SOLID = WALL MOUNTED, DASHED = CEILING		12.	'IDS'	INTRUSION DETECTION PANEL		12.
SH SH	SMOKE & HEAT DETECTOR COMBO: SOLID = WALL MOUNTED, DASHED = CEILING		12.	'PSP'	POWER SUPPLY PANEL FOR ELECTRIFIED DOOR HARDWARE EQUIPMENT		12.

ABBREVIATIONS INDEX

ABBREV.	DESCRIPTION	ABBREV.	DESCRIPTION
#	NUMBER	MH	MANHOLE
AC	ALTERNATING CURRENT	MIC	MICROPHONE
A.F.F.	ABOVE FINISH FLOOR	MIN	MINIMUM
AIC	AMPS INTERRUPTING CAPACITY	MTG	MOUNTING
AM	AMPS METER	MTR	MOTOR
AMP	AMPERE	N/A	NOT APPLICABLE
ANN	ANNUNCIATOR	NC	NORMALLY CLOSED
ATS	AUTOMATIC TRANSFER SWITCH	NEC	NATIONAL ELECTRICAL CODE
AUX	AUXILIARY	NEMA	NATIONAL ELECT. MANUFAC. ASSOC.
AWG	AMERICAN WIRE GAUGE	NFPA	NATIONAL FIRE PROTECTION ASSOC.
BC	BARE COPPER	N.I.C.	NOT IN CONTRACT
BFG	BELOW FINISH GRADE	NO	NORMALLY OPENED
C	CONDUIT	NTS	NOT TO SCALE
CAB	CABINET	OS & Y	OUTSIDE SCREW & YOKE
CATB	COMMUNITY ANTENNA TELEVISION	PB	PUSHBUTTON
CATV	CABLE TELEVISION	PF	POWER FACTOR
CKT	CIRCUIT	PFR	PHASE FAILURE RELAY
CLG	CEILING	PNL	PANEL
CNTR	CONTRACTOR	PT	POTENTIAL TRANSFORMER
C.O.	CONDUIT ONLY	PVC	POLYVINYL CHLORIDE CONDUIT
CRT	COMPUTER TERMINAL	(R)	RELOCATE
CT	CURRENT TRANSFORMER	RECEP	RECEPTACLE
CU	COPPER	REQ	REQUIREMENT
C/W	COMPLETE WITH	RLA	RATED LOAD AMPS
DB	DECIBEL	RMP	ROCKY MOUNTAIN POWER
DC	DIRECT CURRENT	RMS	ROOT MEAN SQUARE
DWG	DRAWING	SE	SERVICE ENTRANCE
(E)	EXISTING	SPEC	SPECIFICATIONS
EC	EMPTY CONDUIT	SPKR	SPEAKER
EG	EMERGENCY GENERATOR	SS	SELECTOR SWITCH
EMT	ELECTRICAL METALLIC TUBING	SW	SWITCH
EX	EXPLOSION PROOF	SWBD	SWITCHBOARD
FACP	FIRE ALARM CONTROL PANEL	SWGR	SWITCHGEAR
FC	FOOT CANDLE	TTB	TELEPHONE TERMINAL BOARD
FT	FOOT	TTC	TELEPHONE TERMINAL CABINET
GFI	GROUND FAULT INTERRUPTER	TV	TELEVISION
GND	GROUND	TYP	TYPICAL
GRC	GALVANIZED RIGID CONDUIT	UG	UNDERGROUND
HP	HORSE POWER	UPS	UNINTERRUPTED POWER SUPPLY
HZ	HERTZ	V	VOLT (KV-KILOVOLT)
IFC	INTERNATIONAL FIRE CODE	VA/R	VOLT-AMPS/REACTIVE
IG	ISOLATED GROUND	VM	VOLT METER
IMC	INTERMEDIATE METALLIC CONDUIT	W	WATTS
IN	INCH	W/	WITH
J-BOX	JUNCTION BOX	WH	WATTHOUR METER
KV	KILOVOLT	W/O	WITHOUT
KVA	KILOVOLT AMPERES	WP	WEATHERPROOF
KVAR	KILOVARS	XFMR	TRANSFORMER
KW	KILOWATT	XFMR SW	TRANSFER SWITCH
LRA	LOCKED ROTOR AMPS	XP	EXPLOSION PROOF
LTG	LIGHTING	1P	SINGLE-PHASE
MNF	MANUFACTURER	2P	TWO-POLE
MAX	MAXIMUM	3P	THREE-POLE
MB	MAIN BUS	4P	FOUR-POLE
MCC	MOTOR CONTROL CENTER	∅	PHASE
MCM	1000 CIRCULAR MILLS		

GENERAL NOTES

1. CONSULT ARCHITECTURAL REFLECTED CEILING PLANS FOR EXACT LOCATION OF ALL LIGHTING FIXTURES.
2. VERIFY ALL EQUIPMENT DIMENSIONS AND LOCATIONS BEFORE BEGINNING ROUGH IN. CONSULT ALL APPLICABLE CONTRACT DRAWINGS AND SHOP DRAWINGS TO INSURE NEC CODE CLEARANCES REQUIRED AROUND ALL ELECTRICAL EQUIPMENT.
3. CONTRACTOR SHALL VERIFY ALL ELECTRICAL LOADS (VOLTAGE, PHASE, CONNECTION REQUIREMENTS, ETC) OF ALL EQUIPMENT FURNISHED UNDER ALL DIVISIONS, INCLUDING ALL EXISTING EQUIPMENT TO BE RE-USED. REVIEW ALL SHOP DRAWINGS AND EXISTING EQUIPMENT BEFORE BEGINNING ROUGH-IN.
4. SEE SECTION 265100 (16510) OF THE SPECIFICATION FOR REQUIRED COORDINATION MEETINGS WITH MECHANICAL AND CEILING CONTRACTORS.
5. SEE APPLICABLE SHOP DRAWINGS FOR ROUGH IN LOCATION OF ALL EQUIPMENT, WIRING DEVICES, ETC. WHERE APPLICABLE MOUNT ALL WIRING DEVICES ABOVE BACK SPLASH EXCEPT THOSE SERVING UNDER COUNTER EQUIPMENT.
6. SEE SPECIFICATION FOR ENERGY SAVING LAMP AND BALLAST REQUIREMENTS.
7. FINISHES OF ALL LIGHT FIXTURES SHALL BE AS SELECTED BY ARCHITECT.
8. THE ELECTRICAL CONTRACTOR SHALL NOTIFY AND COOPERATE WITH THE MECHANICAL CONTRACTOR SUCH THAT NO PIPING, DUCTS, OR EQUIPMENT FOREIGN TO THE OPERATION OF THE ELECTRICAL EQUIPMENT SHALL BE PERMITTED TO BE INSTALLED IN, ENTER OR PASS THRU ELECTRICAL ROOMS OR SPACES, OR ABOVE OR BELOW ELECTRICAL EQUIPMENT IN OTHER AREAS.
9. ELECTRICAL BOXES SHALL NOT BE LOCATED IN MASONRY COLUMNS IN BRICK WALLS OR IN GROUTED CELLS ADJACENT TO OPENINGS. COORDINATE LOCATION OF BOXES WITH MASONRY CONTRACTOR.
10. ALL PENETRATIONS OF FIRE RATED FLOORS, WALLS, AND CEILINGS SHALL BE SEALED WITH APPROVED MATERIAL TO MAINTAIN FIRE RATING OF SURFACE PENETRATED.
11. CONTRACTOR SHALL VERIFY FURNITURE LAYOUT PRIOR TO ANY FLOORBOX OR POKE-THRU INSTALLATION. COORDINATE EXACT LOCATION OF FLOOR BOX OR POKE-THRU WITH OWNER AND FURNITURE PROVIDER PRIOR TO ROUGH-IN.
12. CIRCUITS EXTENDING OVER 70' FOR 120 VOLT AND 115' FOR 277 VOLT 20 AMP CIRCUITS SHALL BE RUN WITH CONDUCTORS PER TABLE BELOW.

20 AMP MINIMUM BRANCH CIRCUIT CONDUCTOR SIZING		
MAXIMUM LENGTH	BRANCH CIRCUIT VOLTAGE	
CONDUCTOR LENGTH (FT)	120 VOLT	277 VOLT
<70	MIN. #12 AWG	MIN. #12 AWG
70 - 115	MIN. #10 AWG	MIN. #12 AWG
115 - 170	MIN. #8 AWG	MIN. #10 AWG
170 - 270	MIN. #6 AWG	MIN. #8 AWG
271 - 380	NOTE B	MIN. #8 AWG
>380	NOTE B	NOTE B

A. THESE ARE BASED ON MAXIMUM LENGTH OF CIRCUIT.

B. PERFORM VOLTAGE DROP CALCULATIONS AND PROVIDE CONDUCTOR SIZE TO KEEP BRANCH CIRCUIT VOLTAGE DROP LESS THAN 3% WITH A 15 AMP LOAD.

C. CONTRACTOR SHALL ENSURE THAT THE INSTALLATION OF EACH BRANCH CIRCUIT STAYS WITHIN 3% VOLTAGE DROP FOR A 15 AMP LOAD. IF NECESSARY,CONTRACTOR SHALL INCREASE WIRE AND CONDUIT SIZE TO MEET THE STANDARD AT NO ADDITIONAL COST TO OWNER.

SHEET INDEX

SYMBOL LEGEND

NOTES:

1. SEE FIXTURE SCHEDULE FOR TYPE, MOUNTING AND WATTAGE.
2. HEIGHT MEASURED TO CENTER LINE OF THE BOX FROM THE FINISHED FLOOR.
3. REFER TO DRAWINGS FOR DIRECTIONAL ARROWS.
4. SUBSCRIPT INDICATES FIXTURES TO BE CONTROLLED.
5. NEMA TYPE 'ND' NON-FUSED UNLESS NOTED 'F' (FUSED). USE 'HD' 480 V.
6. HEIGHT MEASURED TO TOP OF THE BOX FROM FINISHED FLOOR.
7. PROVIDE H.O.A. AND S.S. PUSHBUTTONS AS REQUIRED.
8. DOUBLE ARROWS INDICATES A DOUBLE FACE UNIT.
9. DEVICES NOTED WITH AN 'A' INDICATE TO COORDINATE WITH MILLWORK SHOP DRAWINGS AND ELEVATIONS FOR HEIGHT.
10. SUBSCRIPT INDICATES NEMA CONFIGURATION.
11. SOLID BOX AROUND DEVICE INDICATES INSTALLED IN FLOOR. DASHED BOX AROUND DEVICE INDICATES INSTALLED IN CEILING.
12. COORDINATE WITH DOOR HARDWARE SUPPLIER.
13. FOR WATER COOLER LOCATION, SEE DIAGRAM R002. FOR ALL OTHER LOCATIONS, MOUNT AT +16" TO BOTTOM OF BOX FROM FINISHED FLOOR, OR AS NOTED.
14. ARROWS SHOWN ON DEVICE INDICATE AIMING DIRECTION.
15. CAMERA NUMBERS ARE SHOWN INSIDE THE CAMERA SYMBOL. CAMERA TYPES ARE INDICATED IN TAG.
16. MOUNT ON TRACK OF OVERHEAD DOOR, 6" FROM TOP OF DOOR, UNLESS OVERHEAD DOOR IS A ROLL UP DOOR, THEN MOUNT PER MANUFACTURER'S INSTRUCTIONS.
17. INSTALL DEVICES PER MANUFACTURER'S INSTALLATION INSTRUCTIONS.
18. DASHED LINE INDICATES EQUIPMENT CLEARANCES. ARROW INDICATES FRONT OF RACK.
19. SPEAKER TO BE MOUNTED IN HORIZONTAL POSITION.
20. MOUNTING HEIGHT IS TO BOTTOM OF DISPLAY.

*TYPICAL SYMBOL SCHEDULE. SOME SYMBOLS MAY NOT BE USED ON THIS SET OF DRAWINGS.

STANDARD MOUNTING HEIGHT UNLESS OTHERWISE NOTED ON PLANS

GENERAL							
SYMBOL	DESCRIPTION	MOUNTING HEIGHT	NOTES	SYMBOL	DESCRIPTION	MOUNTING HEIGHT	NOTES
	ONE CIRCUIT, HOME RUN TO PANEL				EQUIPMENT PANEL, SEE DRAWINGS	+72"	6.
	2 CIRCUIT, HOME RUN TO PANEL				CABLE TRAY	AS NOTED	
	3 CIRCUIT, HOME RUN TO PANEL				GROUND BUS BAR	+18"	6.
	CONDUIT RUN CONCEALED IN WALL OR CEILING			X	LIGHT FIXTURE (LETTER DESIGNATES TYPE)		
	CONDUIT RUN CONCEALED IN FLOOR OR GROUND			X X	EQUIPMENT NUMBER		
	CONDUIT UP			X	ARCHITECTURAL ROOM NUMBER		
	CONDUIT DOWN			X	DEVICE / EQUIPMENT (TEXT DESIGNATES TYPE) SEE SCHEDULE		
	CONDUIT STUB LOCATION	CAP CONDUIT		X	DEVICE / EQUIPMENT (TEXT DESIGNATES TYPE) SEE SCHEDULE / LEGEND		
	CONDUIT / CIRCUIT CONTINUATION						

MULTIPLE SYSTEM SYMBOLS							
R	RECEPTACLE SWITCH PACK		ABOVE CEILING	J F	JUNCTION BOX ('F' IN FLOOR)	AS NOTED	
	DUPLEX RECEPTACLE	UPPER OUTLET SWITCH CONTROLLED	+18" OR AS NOTED		MOTOR OUTLET	TO SUIT EQUIP.	2.
	SIMPLEX RECEPTACLE		+18" OR AS NOTED	2. 9.	PUSHBUTTON	+46"	2.
	DUPLEX RECEPTACLE		+18" OR AS NOTED	2. 9. 11.	NON-FUSED DISCONNECT SWITCH	+60"	5. 6.
A	DUPLEX RECEPTACLE			9.	F FUSED DISCONNECT SWITCH	+60"	5. 6.
G	5mA GFCI CIRCUIT BREAKER PROTECTED RECEPTACLE			13.	B BREAKER DISCONNECT SWITCH	+60"	5. 6.
WP	WEATHERPROOF RECEPTACLE		+24" OR AS NOTED	2. 9.	SINGLE POLE SWITCH	+46"	2. 4.
	GROUND FAULT INTERRUPTER DUPLEX RECEPTACLE		+18" OR AS NOTED	2. 9.	T MANUAL STARTER THERMAL OVERLOAD SWITCH WITH PILOT LIGHT	+46"	2.
	DUPLEX RECEPTACLE EMERGENCY POWER (RED)		+18" OR AS NOTED	2. 9. 11.	MAGNETIC STARTER	+60"	6. 7.
	FOURPLEX RECEPTACLE		+18" OR AS NOTED	2. 9. 11.	MAGNETIC STARTER / DISCONNECT COMBINATION	+60"	6. 7.
	GROUND FAULT INTERRUPTER FOURPLEX RECEPT		+18" OR AS NOTED	2. 9.	VFD VARIABLE FREQUENCY DRIVE	+66"	6.

LIGHTING							
	CEILING LIGHT FIXTURE	CEILING	1.	PP	POWER PACK	ABOVE CEILING	SEE DIAGRAM, SPEC.
	WALL LIGHT FIXTURE	AS NOTED	1.	RC X	DIGITAL ROOM CONTROLLER (SUBSCRIPT INDICATES NUMBER OF RELAYS)	ABOVE CEILING	SEE DIAGRAM, SPEC.
	RECESSED DOWNLIGHT FIXTURE	CEILING	1.	EP	EMERGENCY LIGHTING CONTROL UNIT	ABOVE CEILING	SEE DIAGRAM, SPEC.
	RECESSED WALL-WASH DOWNLIGHT FIXTURE	CEILING	1.	S3	THREE-WAY SWITCH	+46"	2. 4.
	LIGHT FIXTURE	AS NOTED	1.	S4	FOUR-WAY SWITCH	+46"	2. 4.
	EGRESS LIGHT FIXTURE	AS NOTED	1.	SK	KEY OPERATED SWITCH	+46"	2. 4.
	AREA LIGHT POLE AND FIXTURE POST TOP LIGHT POLE AND FIXTURE	CONCRETE BASE	1. 14. SEE DIAGRAM	SP	SWITCH WITH PILOT LIGHT	+46"	2. 4.
	BOLLARD	CONCRETE BASE	1. 14. SEE DIAGRAM	SD	VARIABLE INTENSITY SWITCH	+46"	2. 4.
	STEP LIGHT FIXTURE	AS NOTED	1.	STM	TIMER SWITCH	+46"	2. 4.
	IN-GRADE LIGHT FIXTURE	CONCRETE BASE	1.		MOMENTARY CONTACT SWITCH	+46"	2. 4.
	FLOOD OR TRACK FIXTURE	AS NOTED	1.	X	LOW VOLTAGE WALLSTATION (SUBSCRIPT INDICATES CONFIGURATION & CONTROL SEQUENCE)	+46"	2. SEE DIAGRAM, SPEC.
	CEILING / WALL MOUNTED EXIT LIGHT	CEILING/ AS NOTED	1. 3. 8.		DUAL TECH. CEILING MOUNTED OCCUPANCY SENSOR (PROVIDE WITH ALL PP AND ROOM CONTROLLERS)	CEILING	SEE DIAGRAM, SPEC.
	EMERGENCY LIGHT FIXTURE	AS NOTED	1.		DUAL TECH. WALL MOUNTED OCCUPANCY SENSOR (SUBSCIPT D = DIMMING AND DAYLIGHT CONTROL)	+46"	2. 4. SEE DIAGRAM, SPEC.
	COMBO EXIT / EMERGENCY LIGHT FIXTURE	AS NOTED	1.	P	PHOTO-ELECTRIC CONTROL (LOCATE ON ROOF, FACE NORTH)	AS NOTED	MOUNT AS PER MFR.
TC	TIME CLOCK	+60"	2.		DIGITAL DAYLIGHT SENSOR	CEILING	SEE DIAGRAM, SPEC.

POWER							
IG	ISOLATED GROUND RECEPTACLE	+18" OR AS NOTED	2. 9.	J	PLUGMOLD	+46" OR AS NOTED	2. SEE SPEC.
T	TAMPER-PROOF RECEPTACLE	+18" OR AS NOTED	2. 9.	DP	FLAT PANEL DISPLAY WALL BOX TVSS RECEPT., DATA AND OTHER DEVICES, REFER TO DIAGRAMS	AS NOTED	SEE DIAGRAM, SPEC. 26 2726
U	DUPLEX RECEPTACLE WITH USB OUTLET	+18" OR AS NOTED	2. 9.	CP	CEILING PROJECTION SYSTEM CEILING BOX	ABOVE CEILING	SEE DIAGRAM, SPEC.
	CONTROLLED DUPLEX RECEPTACLE	+18" OR AS NOTED	2. 9.		DOORBELL CHIME	+90"	2.
	FOURPLEX RECEPTACLE EMERGENCY POWER (RED)	+18" OR AS NOTED	2. 9. 11.	FB	FLOOR BOX - SEE SCHEDULE	FLOOR	SEE DIAGRAM, SPEC.
	CONTROLLED FOURPLEX RECEPTACLE	+18" OR AS NOTED	2. 9.	PT	POKE THRU - SEE SCHEDULE	FLOOR	SEE DIAGRAM, SPEC.
	TVSS PROTECTED RECEPTACLE	+18" OR AS NOTED	2. 9.		PANELBOARD		
	SPECIAL PURPOSE OUTLET	+18" OR AS NOTED	2. 10. W/ CAP.		MAIN DISTRIBUTION PANEL		
	CORD DROP		SEE DIAGRAM		TELEPHONE DEMARCATION BOARD		
	CORD REEL		SEE DIAGRAM	CLG	EQUIPMENT CEILING RACK	CEILING	
	TOMBSTONE RECEPTACLE				EQUIPMENT 4-POST RACK / CABINET	AS NOTED	18. SEE SPEC.
	POWER POLE				EQUIPMENT 2-POST RACK	AS NOTED	18. SEE SPEC.
EV EV	SINGLE / DUAL PORT ELECTRICAL VEHICLE CHARGER			M	UTILITY METER / CT CABINET	+72"	6.

TELECOMMUNICATIONS							
XX W	WALL PHONE "XX" INDICATES PURPOSE: SC = SECURITY, AV = AUDIOVISUAL	+60" OR AS NOTED	2.	XX WAP XX WAP	WIRELESS ACCESS POINT, TWO CABLES SOLID = WALL, DASHED = CEILING "XX" INDICATES PURPOSE: SC = SECURITY, AV = AUDIOVISUAL	WALL / CEILING	11.
XX	DATA OUTLET, ONE CABLE "XX" INDICATES PURPOSE: SC = SECURITY, AV = AUDIOVISUAL	+18" OR AS NOTED	2. 9. 11.	SPL	SPLITTER	ABOVE CEILING	
XX	DATA OUTLET, TWO CABLES "XX" INDICATES PURPOSE: SC = SECURITY, AV = AUDIOVISUAL	+18" OR AS NOTED	2. 9. 11.	VIA	VIA	ABOVE CEILING	
XX	DATA OUTLET, THREE CABLES "XX" INDICATES PURPOSE: SC = SECURITY, AV = AUDIOVISUAL	+18" OR AS NOTED	2. 9. 11.	BDA	FIBER BDA	ABOVE CEILING	
XX X	DATA OUTLET, "X" INDICATES QUANTITY "XX" INDICATES PURPOSE: SC = SECURITY, AV = AUDIOVISUAL	+18" OR AS NOTED	2. 9. 11.	ANT XX	ANTENNA PS = PUBLIC SAFETY, COM = CELLULAR/COMMERCIAL	CEILING	
	DATA OUTLET, SOLID = FLOOR, DASHED = CEILING "XX" INDICATES PURPOSE: SC = SECURITY, AV = AUDIOVISUAL		11.				
	TELEVISION OUTLET, SOLID = FLOOR, DASHED = CEILING	+18" OR AS NOTED	9. 11.				

BNA CONSULTING
4225 Lake Park Blvd, Suite 275
West Valley City, UT 84120
P: 801.532.2196
F: 801.532.2305
www.bnaconsulting.com
SALT LAKE ST. GEORGE

KCC STORES WAREHOUSE

2010 N. RULON WHITE BLVD.
FARR WEST, UT 84404

PROFESSIONAL ENGINEER BRIAN HICKS No. 7509037-2202 STATE OF UTAH

REVISIONS		
MARK	DATE	DESCRIPTION

DATE:	04 OCT 2024
PROJECT NO:	EA24022TP
DRAWN BY:	CALVIN
CHK'D BY:	RICHARD

ELECTRICAL SYMBOLS AND NOTES

E-001

LIGHT FIXTURE SCHEDULE

LIGHT FIXTURE ABBREVIATION SCHEDULE — PROJECT MANAGER: RICHARD WARDLE

A.F.F.	ABOVE FINISH FLOOR	SCBA	STANDARD PAINTED COLOR AS SELECTED BY THE ARCHITECT
WALL@CLG	WALL MOUNT AT CORNER OF WALL AND CEILING	CFBA	CUSTOM FINISH AS SELECTED BY THE ARCHITECT
CCBA	CUSTOM PAINTED COLOR AS SELECTED BY THE ARCHITECT	SFBA	STANDARD FINISH AS SELECTED BY THE ARCHITECT

LIGHT FIXTURE GENERAL NOTES

1. REFER TO ARCHITECTURAL REFLECTED CEILING PLANS FOR LOCATIONS OF LIGHT FIXTURES AND, CONFIRM CEILING TYPES WITH LIGHT FIXTURE TRIMS. BRING ALL DISCREPANCIES OF LOCATIONS AND QUANTITIES TO THE ATTENTION OF THE ARCHITECT AND ELECTRICAL ENGINEER PRIOR TO BIDDING.
2. REFER TO ARCHITECTURAL ELEVATIONS FOR MOUNTING HEIGHTS AND LOCATIONS OF LIGHT FIXTURES. BRING ALL DISCREPENCIES TO THE ATTENTION OF THE ARCHITECT PRIOR TO BIDDING.
3. REFER TO THE SPECIFICATIONS FOR OTHER LIGHT FIXTURE, FUSING, LED DRIVERS, AND LAMP REQUIREMENTS AND ACCEPTABLE MANUFACTURERS.
4. CONFIRM AVAILABLE MOUNTING DEPTHS OF ALL LIGHT FIXTURES AND COMPARE WITH DEPTHS SHOWN ON SHOP DRAWINGS. BRING ALL POTENTIAL CONFLICT AREAS TO THE ATTENTION OF THE ARCHITECT AND ELECTRICAL ENGINEER PRIOR TO RELEASE.
5. REFER TO LIGHTING PLANS FOR ALL LINEAR FIXTURE LENGTHS. THE CATALOG NUMBER IS BASED ON THE FIXTURE SPECIFIED AND MAY NOT REFLECT THE QUANTITY OR OVERALL LENGTH OF LINEAR FIXTURES REQUIRED. CONTRACTOR TO NOTE THAT VARIOUS FIXTURE LENGTHS MAY BE REQUIRED TO ACHIEVE THE OVERALL RUN LENGTH.
6. REFER TO LIGHTING PLANS FOR ALL UNDERCABINET FIXTURE LENGTHS. THE CATALOG NUMBER IS BASED ON THE FIXTURE SPECIFIED AND MAY NOT REFLECT THE QUANTITY OR OVERALL LENGTH OF THE UNDERCABINET FIXTURES REQUIRED. CONTRACTOR TO NOTE THAT VARIOUS FIXTURE LENGTHS MAY BE REQUIRED TO ACHIEVE THE OVERALL RUN LENGTH OR TO FIT WITHIN THE MILLWORK. COORDINATE FIXTURE LAYOUT WITH MILLWORK SHOP DRAWINGS PRIOR TO LIGHTING SUBMITTALS.
7. WHEN A CONTRADICTION EXISTS BETWEEN A SPECIFIC MODEL NUMBER AND THE DESCRIPTION, NOTIFY THE ELECTRICAL ENGINEER AND/OR LIGHTING DESIGNER.
8. PRIOR APPROVALS ARE REQUIRED BEFORE BIDDING THE PROJECT AND SHALL BE SUBMITTED TO THE ELECTRICAL ENGINEER'S OFFICE AT LEAST (8) EIGHT WORKING DAYS BEFORE THE BID. PRIOR APPROVALS RECEIVED AFTER THIS TIME PERIOD SHALL BE REJECTED.
9. REFER TO SPECIFICATIONS 20 0500, 26 5100 & 26 5600 (16001, 16510 & 16551).
10. VALUE ENGINEERING CONDUCTED WITHOUT THE DESIGN TEAM IE; ARCHITECT, ENGINEER & LIGHTING CONSULTANT/DESIGNER WILL NOT BE ALLOWED, REVIEWED OR APPROVED.

TYPE	DESCRIPTION	MFR.	CATALOG #	VOLTS	TOTAL WATTS	LAMP TYPE	DELIVERED LUMENS	COLOR TEMP	CRI
A	DIE CAST HIGH BAY WITH 24,971 LUMENS WITH OCCUPANCY SENSOR AND DIMMING DRIVER	ATLAS LIGHTING	ORHB-22-30L-IRH-MOT	120 V	169 VA	LED	0	4000 K	80
OE	LED WALL PACK WITH PHOTOCELL	ATLAS LIGHTING	WSPS-20LED-4R-PC-BK	120 V	18 VA	LED	2,125	4000 K	70
X1	SINGLE FACE GREEN LED EXIT SIGN; WHITE THERMOPLASTIC; UNIVERSAL MOUNTING; FIELD SELECTABLE CHEVRONS; UNIVERSAL FACES	ATLAS LIGHTING	EECPRWG	120 V	5 VA	LED			

EQUIPMENT SCHEDULE

CONNECTION TYPE NOTES:

1. NON-FUSED DISCONNECT SWITCH
2. FUSED DISCONNECT SWITCH
3. BREAKER IN ENCLOSURE
4. MANUAL STARTER WITH THERMAL OVERLOAD
5. MAGNETIC STARTER
6. MAGNETIC STARTER/NON-FUSED DISCONNECT COMBINATION
7. MAGNETIC STARTER/FUSED DISCONNECT COMBINATION
8. MAGNETIC STARTER/BREAKER COMBINATION
9. VARIABLE FREQUENCY DRIVE
10. REDUCED VOLTAGE STARTER
11. DIRECT CONNECTION
12. RECEPTACLE/SPECIAL PURPOSE OUTLET/ETC.
13. TWO-SPEED STARTER. COORDINATE WITH MOTOR TYPE
14. SOLID STATE SOFT-STARTER

RESPONSIBILITY LEGEND:

A. FURNISHED, INSTALLED AND CONNECTED UNDER DIVISION 26(16)
B. FURNISHED AND INSTALLED UNDER ANOTHER DIVISION. REQUIRED CONNECTION UNDER DIVISION 26(16)
C. FURNISHED UNDER ANOTHER DIVISION BUT INSTALLED AND CONNECTED UNDER DIVISION 26(16)
D. FURNISHED, INSTALLED AND CONNECTED UNDER ANOTHER DIVISION

CB = CIRCUIT BREAKER

NOTE 1: PER 250.122(A), EQUIPMENT GROUND IS NOT REQUIRED TO BE LARGER THAN THE PHASE CONDUCTOR
NOTE 2: OVERCURRENT PROTECTION DEVICE (OCPD) SHOWN IS LOCATED AT POWER PANEL. ALL FUSING TO BE SIZED IN ACCORDANCE WITH FUSE MFR RECOMMENDATION FOR MOTOR NAME PLATE RATING.
NOTE 3: ALL EQUIPMENT TO BE RATED FOR THE ENVIRONMENT FOR WHICH IT IS INSTALLED.

UNIT	#	DESCRIPTION	ELECTRICAL EQUIPMENT INFORMATION – LOAD: HP	FLA	MCA	VA	VOLTAGE	PHASE	FULL LOAD AMPS	CONDUIT SIZE	WIRE: SETS	QTY	SIZE	EQ. GROUND	OCPD: TYPE	AMPS	STARTER/ DISC/ VFD OTHER (SEE NOTES)	REMARKS
~~EF~~	~~1~~	~~EXHAUST FAN~~	~~0.00~~	~~0 A~~	~~0 A~~	~~180 VA~~	~~120 V~~	~~1~~	~~1.0 A~~	~~3/4"~~	~~1~~	~~2~~	~~10~~	~~10~~	~~CB~~	~~20 A~~	~~4 A~~	
UH	1	UNIT HEATER	0.00	0 A	5 A	0 VA	120 V	1	4.0 A	3/4"	1	2	12	12	CB	15 A	4 A	
UH	2	UNIT HEATER	0.00	0 A	5 A	0 VA	120 V	1	4.0 A	3/4"	1	2	12	12	CB	15 A	4 A	
UH	3	UNIT HEATER	0.00	0 A	5 A	0 VA	120 V	1	4.0 A	3/4"	1	2	12	12	CB	15 A	4 A	
UH	4	UNIT HEATER	0.00	0 A	5 A	0 VA	120 V	1	4.0 A	3/4"	1	2	12	12	CB	15 A	4 A	

BNA CONSULTING
4225 Lake Park Blvd, Suite 275
West Valley City, UT 84120
P: 801.532.2196
F: 801.532.2305
www.bnaconsulting.com
SALT LAKE ST. GEORGE

KCC STORES WAREHOUSE
2010 N. RULON WHITE BLVD.
FARR WEST, UT 84404

PROFESSIONAL ENGINEER
BRIAN HICKS
No. 7709037-2202
STATE OF UTAH

REVISIONS

MARK	DATE	DESCRIPTION
1	11.4.24	PLAN REVIEW
2	11.20.24	REVISION 1

DATE:	04 OCT 2024
PROJECT NO:	EA24022TP
DRAWN BY:	CALVIN
CHK'D BY:	RICHARD

SCHEDULES

E-002

THIS PRINT IS IN BLACK & WHITE

Autodesk Docs://EA24022TP - KC PEMB Structure - Ogden/24197 - KIMBERLY CLARK PEMB ELEC v25.rvt

11/20/2024 11:35:25 AM/97 KCC STORES WAREHOUSE

THIS PRINT IS IN BLACK & WHITE

Autodesk Docs://EA24022TP - KC PEMB Structure - Ogden/24197 - KIMBERLY CLARK PEMB ELEC v25.rvt

KCC STORES WAREHOUSE

11/20/2024 11:35:25 AM

ELECTRICAL SPECIFICATIONS

ELECTRICAL GENERAL PROVISIONS

DESCRIPTION OF WORK: EXTENT OF ELECTRICAL WORK IS INDICATED ON DRAWINGS. PROVIDE ALL LABOR, MATERIALS, EQUIPMENT, SUPERVISION AND SERVICE NECESSARY FOR A COMPLETE ELECTRICAL SYSTEM. WORK INCLUDES, BUT IS NOT NECESSARILY LIMITED TO THE FOLLOWING ITEMS:

- ELECTRICAL CONNECTIONS FOR EQUIPMENT
- CONDUCTORS AND CABLES
- GROUNDING
- SUPPORTING DEVICES
- CONDUIT RACEWAYS
- ELECTRICAL BOXES AND FITTINGS
- ELECTRICAL SEISMIC CONTROL
- ELECTRICAL IDENTIFICATION
- PROTECTIVE DEVICE STUDY
- OCCUPANCY SENSORS
- TRANSFORMERS
- SWITCHGEAR AND SWITCHBOARDS
- PANELBOARDS
- WIRING DEVICES
- OVERCURRENT PROTECTIVE DEVICES
- MOTOR AND CIRCUIT DISCONNECTS
- SURGE PROTECTIVE DEVICES
- INTERIOR AND EXTERIOR BUILDING LIGHTING
- TELECOMMUNICATIONS RACEWAYS
- SECURITY SYSTEM RACEWAYS
- FIRE ALARMS AND DETECTION SYSTEMS

INTERPRETATION OF DRAWINGS AND SPECIFICATIONS: BEFORE BIDDING, CONTRACTOR SHALL FAMILIARIZE THEMSELVES WITH THE DRAWINGS, SPECIFICATIONS AND PROJECT SITE.

VISIT THE SITE DURING THE BIDDING PERIOD TO DETERMINE EXISTING CONDITIONS AFFECTING ELECTRICAL AND OTHER WORK, ALL COSTS ARISING FROM SITE CONDITIONS AND/OR PREPARATION SHALL BE INCLUDED IN THE BASE BID. NO ADDITIONAL CHARGES WILL BE ALLOWED DUE TO INADEQUATE SITE INSPECTION.

QUALITY ASSURANCE: PERFORM WORK IN ACCORDANCE WITH THE NATIONAL ELECTRICAL CODE (NEC). COMPLY WITH REQUIREMENTS FOR STATE AND LOCAL ORDINANCES. OBTAIN ALL PERMITS, INSPECTIONS, ETC FOR AUTHORITY HAVING JURISDICTION (AHJ). EMPLOY ONLY QUALIFIED CRAFTSMEN WITH AT LEAST THREE (3) YEARS OF EXPERIENCE. WORKMANSHIP SHALL BE NEAT, HAVE A GOOD MECHANICAL APPEARANCE AND CONFORM TO BEST ELECTRICAL STATE CONTRACTING LICENSE. PROVIDE EQUIPMENT AND MATERIALS THAT ARE UNDERWRITERS LABORATORIES INC. (UL) LISTED AND LABELED.

SUBMITTALS: AFTER THE CONTRACT IS AWARDED BUT PRIOR TO MANUFACTURE OR INSTALLATION OF ANY EQUIPMENT, PREPARE COMPLETE SHOP DRAWINGS.

1. PROVIDE SUBMITTALS IN PORTABLE DOCUMENT FORMAT (PDF).
2. DOCUMENTS MUST BE ELECTRONICALLY BOOKMARKED AND KEYWORD SEARCHABLE USING (HTTP://ADOBE.COM/ACROBAT) ADOBE ACROBAT OR BLUEBEAM REVU (HTTP://BLUEBEAM.COM) FOR EACH RELEVANT SECTION. (I.E. INCLUDE ELECTRONIC BOOKMARKS SEPARATION “LIGHT FIXTURES” FROM “PANELBOARDS”.)
3. ELECTRONICALLY HIGHLIGHT ALL OPTIONS FOR LIGHT FIXTURES, ELECTRICAL EQUIPMENT, ETC. MANUAL HIGHLIGHTING AND SCANNING OF THE DOCUMENTS IS NOT ACCEPTABLE AND WILL NOT BE REVIEWED.
4. PROVIDE ONLY COMPLETED CUTSHEETS FOR ALL FIXTURE AND EQUIPMENT TYPES. BLANK CUTSHEETS SUBMITTED WITH A SCHEDULE ARE NOT ACCEPTABLE AND WILL NOT BE REVIEWED.
5. A MAXIMUM OF ONE SUBMITTAL PER SPECIFICATION SECTION IS ALLOWED, IT IS NOT ACCEPTABLE TO PROVIDE PRODUCT BY PRODUCT SUBMITTAL. SINGLE PRODUCT SUBMITTALS WILL NOT BE REVIEWED.
    - A. ELECTRICAL CONNECTIONS FOR EQUIPMENT
    - B. CONDUCTORS AND CABLES
    - C. GROUNDING
    - D. SUPPORTING DEVICES
    - E. CONDUIT RACEWAYS
    - F. ELECTRICAL BOXES AND FITTINGS
    - G. ELECTRICAL SEISMIC CONTROL
    - H. ELECTRICAL IDENTIFICATION
    - I. PROTECTIVE DEVICE STUDY
    - J. OCCUPANCY SENSORS
    - K. TRANSFORMERS
    - L. SWITCHGEAR AND SWITCHBOARDS
    - M. PANELBOARDS
    - N. WIRING DEVICES
    - O. OVERCURRENT PROTECTIVE DEVICES
    - P. MOTOR AND CIRCUIT DISCONNECTS
    - Q. INTERIOR AND EXTERIOR BUILDING LIGHTING
    - R. TELECOMMUNICATIONS SYSTEMS RACEWAYS
    - S. SECURITY SYSTEM RACEWAYS
    - T. FIRE ALARMS AND DETECTION SYSTEMS
6. **PRODUCTS:** PRODUCTS ARE SPECIFIED BY MANUFACTURE NAME, DESCRIPTION AND/OR CATALOG NUMBER. PROVIDE PRODUCTS OF MANUFACTURERS SPECIFIED. SUBSTITUTIONS WILL BE CONSIDERED IF A DUPLICATE WRITTEN APPLICATION IS SUBMITTED. NO MATERIAL MAY BE SUBSTITUTED AFTER THE BID OPENING. PROVIDE BLOCK OUTS, SLEEVES, ETC. REQUIRED FOR INSTALLATION OF WORK SPECIFIED.
7. **RECORD DRAWINGS:** MAINTAIN ON A DAILY BASIS, A COMPLETE SET OF RECORD DRAWINGS, REFLECTING AN ACCURATE DIMENSIONAL RECORD OF ALL BURIED OR CONCEALED WORK. MARK RECORD DRAWINGS TO SHOW THE PRECISE LOCATION OF CONCEALED WORK AND EQUIPMENT, INCLUDING CONCEALED OR EMBEDDED CONDUIT AND JUNCTION BOXES AND ALL CHANGES AND DEVIATIONS IN THE WORK FROM THAT SHOWN ON THE CONTRACT DOCUMENTS.
8. **OPERATION AND MAINTENANCE MANUALS:** PROVIDE OPERATION AND MAINTENANCE DATA BOOKS FOR ALL EQUIPMENT AND MATERIALS FURNISHED UNDER THIS DIVISION.
9. **GUARANTEE:** ENSURE THAT ELECTRICAL SYSTEMS INSTALLED UNDER THIS CONTRACT IS IN PROPER WORKING ORDER AND IN COMPLIANCE WITH DRAWINGS, SPECIFICATIONS, AND/OR AUTHORIZED CHANGES, WITHOUT ADDITIONAL CHARGE, REPLACE ANY WORK OR MATERIALS WHICH DEVELOP DEFECTS, EXCEPT FROM ORDINARY WEAR AND TEAR, WITHIN ONE YEAR FROM THE DATE OF SUBSTANTIAL COMPLETION.
10. **FIRE PROTECTION SEALS:** SEAL ALL PENETRATIONS FOR WORK OF THIS SECTION THROUGH FIRE RATED FLOORS, WALLS, CEILINGS TO PREVENT THE SPREAD OF SMOKE, FIRE, TOXIC GAS, OR WATER THROUGH THE PENETRATION EITHER BEFORE, DURING OR AFTER FIRE.
11. **POWER OUTAGES:** ALL POWER OUTAGES REQUIRED FOR EXECUTION OF THIS WORK SHALL OCCUR DURING NON-STANDARD WORKING HOURS AND AT THE CONVENIENCE OF THE OWNER. INCLUDE ALL COSTS FOR OVERTIME WORK IN BID.
12. **EXCAVATING FOR ELECTRICAL WORK:** LOCATE AND PROTECT EXISTING UTILITIES AND OTHER UNDERGROUND WORK. PERFORM EXCAVATION IN A MANNER WHICH PROTECTS WALLS, FOOTINGS AND OTHER STRUCTURAL MEMBERS.
13. CONCRETE BASES: PROVIDE 4” CONCRETE BASES FOR ELECTRICAL EQUIPMENT.
14. ROOF PENETRATIONS: PROVIDE ROOF JACK, SIZED TO FIT TIGHTLY TO RACEWAY FOR WEATHERTIGHT SEAL.

ELECTRICAL CONNECTIONS FOR EQUIPMENT

1. VERIFY EXACT LOAD AND LOCATION OF ALL EQUIPMENT BEFORE ROUGH-IN FOR EACH ELECTRICAL CONNECTION. PROVIDE COMPLETE ASSEMBLY OF MATERIAL, INCLUDING BUT NOT NECESSARILY LIMITED TO, RACEWAYS, CONDUCTORS, CORDS, CORD CAPS, PLUGS, WIRING DEVICES, PRESSURE CONNECTORS, TERMINALS (LUGS), ELECTRICAL INSULATION TAPE, HEAT-SHRINKABLE INSULATION TUBING, CABLE TIES, SOLDERLESS WIRE NUTS, AND OTHER ITEMS AND ACCESSORIES AS NEEDED TO COMPLETE SPLICES, TERMINATIONS, AND CONNECTIONS AS REQUIRED. FOR PERMANENTLY INSTALLED FIXED EQUIPMENT, PROVIDE FLEXIBLE SEAL-TITE CONNECTIONS. FOR MOVABLE AND/OR PORTABLE EQUIPMENT, PROVIDE WIRE DEVICE, CORD CAP, AND MULTI-CONDUCTOR CORD.

ELECTRICAL CONNECTIONS FOR EQUIPMENT

1. VERIFY EXACT LOAD AND LOCATION OF ALL EQUIPMENT BEFORE ROUGH-IN FOR EACH ELECTRICAL CONNECTION. PROVIDE COMPLETE ASSEMBLY OF MATERIAL, INCLUDING BUT NOT NECESSARILY LIMITED TO, RACEWAYS, CONDUCTORS, CORDS, CORD CAPS, PLUGS, WIRING DEVICES, PRESSURE CONNECTORS, TERMINALS (LUGS), ELECTRICAL INSULATION TAPE, HEAT-SHRINKABLE INSULATION TUBING, CABLE TIES, SOLDERLESS WIRE NUTS, AND OTHER ITEMS AND ACCESSORIES AS NEEDED TO COMPLETE SPLICES, TERMINATIONS, AND CONNECTIONS AS REQUIRED. FOR PERMANENTLY INSTALLED FIXED EQUIPMENT, PROVIDE FLEXIBLE SEAL-TITE CONNECTIONS. FOR MOVABLE AND/OR PORTABLE EQUIPMENT, PROVIDE WIRE DEVICE, CORD CAP, AND MULTI-CONDUCTOR CORD.

CONDUCTORS AND CABLES

1. PROVIDE FACTORY FABRICATED CONDUCTORS FOR SIZES, RATINGS, MATERIAL, AND TYPES INDICATED FOR EACH SERVICE. PROVIDE COPPER CONDUCTORS, WITH THHN/THWN INSULATION. SIZE ALL CONDUCTORS IN ACCORDANCE WITH NEC: MINIMUM SIZE TO BE #12 AWG. PROVIDE STRANDED CONDUCTORS FOR #8 AWG AND LARGER.
2. THE FOLLOWING COLOR SCHEME SHALL BE USED:

CONDUCTOR	240/120 V SYSTEM	208/120 V SYSTEM	480/277 V SYSTEM
PHASE A	BLACK	BLACK	BROWN
PHASE B	RED	RED	ORANGE
PHASE C	BLUE	BLUE	YELLOW
SHARED/SINGLE NEUTRAL	WHITE	WHITE	GRAY
NEUTRAL A (DEDICATED)	WHITE W/ BLACK STRIPE	WHITE W/ BLACK STRIPE	GRAY W/ BROWN STRIPE
NEUTRAL B (DEDICATED)	WHITE W/ RED STRIPE	WHITE W/ RED STRIPE	GRAY W/ ORANGE STRIPE
NEUTRAL C (DEDICATED)	WHITE W/ BLUE STRIPE	WHITE W/ BLUE STRIPE	GRAY W/ YELLOW STRIPE
EQUIPMENT GROUND	GREEN	GREEN	GREEN
ISOLATED GROUND	GREEN W/ YELLOW STRIPE	GREEN W/ YELLOW STRIPE	GREEN W/ YELLOW STRIPE

3. MC CABLE:
    - A. MC CABLE IS ACCEPTABLE FOR ALL BRANCH CIRCUITS INSTALLED IN GYPSUM WALLBOARD WALLS FROM THE HOME RUN DEVICE BOX TO THE LAST DEVICE BOX ON THE BRANCH CIRCUIT AND ALL BOXES IN BETWEEN, FROM THE HOME RUN DEVICE BOX TO THE BRANCH PANEL, THE CIRCUIT SHALL BE INSTALLED IN AN APPROVED RACEWAY. MC CABLE IS ACCEPTABLE FOR ALL LIGHT FIXTURE WHIPS NOT LONGER THAN SIX FEET IN LENGTH. LOCATED IN REMOVABLE GRID CEILINGS. MC CABLE IS UNACCEPTABLE TO BE INSTALLED FROM LIGHT FIXTURE TO LIGHT FIXTURE. ALL MC CABLE SHALL BE PROVIDED WITH ANTI SHORT FITTINGS.
    - B. THE USE OF MC-PCS CABLE IS ACCEPTABLE FOR LIGHT FIXTURE WHIPS UTILIZING 0-10V CONTROL SCHEMES, NOT LONGER THAN 72” IN LENGTH, LOCATED ABOVE REMOVABLE GRID CEILINGS. ALL MC CABLE SHALL BE PROVIDED WITH ANTI-SHORT FITTINGS.
        - a. ACCEPTABLE MANUFACTURERS
            - AFC - MC LUMINARY CABLE
            - ENCORE - MC-LED LIGHTING CABLE
            - SOUTHWIRE - MC-PCS DUO

GROUNDING

- PROVIDE GROUNDING AND BONDING OF ALL ELECTRICAL AND COMMUNICATION APPARATUS, MACHINERY, APPLIANCES, BUILDING COMPONENTS, AND ITEMS REQUIRED BY THE NEC TO PROVIDE A PERMANENT, CONTINUOUS LOW IMPEDANCE, GROUNDING SYSTEM. PROVIDE AN NEC BONDING/GROUNDING CONDUCTOR IN ALL RACEWAYS USE FOR POWER DISTRIBUTION.

SUPPORTING DEVICES

- PROVIDE SUPPORTS, ANCHORS, SLEEVES AND SEALS AS REQUIRED FOR A COMPLETE RACEWAY SUPPORT SYSTEM, INCLUDING BUT NOT LIMITED TO: CLEVIS HANGERS, RISER CLAMPS, C-CLAMPS, BEAM CLAMPS, ONE- AND TWO-HOLE CONDUIT STRAPS, OFFSET CONDUIT CLAMPS, EXPANSION ANCHORS, TOGGLE BOLTS, THREADED RODS, U-CHANNEL STRUT SYSTEM, AND ALL OTHER ASSOCIATED ACCESSORIES. INSTALL IN ACCORDANCE WITH MANUFACTURER’S WRITTEN INSTRUCTIONS AND WITH RECOGNIZED INDUSTRY PRACTICES TO ENSURE SUPPORTING DEVICES COMPLY WITH REQUIREMENTS. PROVIDE RIGID ATTACHMENT OF ALL FLOOR MOUNTED EQUIPMENT TO THE FLOOR SLAB OR STRUCTURAL SYSTEM.

CONDUIT RACEWAYS

1. PROVIDE METAL CONDUIT, TUBING, AND FITTINGS OF TYPES, GRADES, SIZES, AND WEIGHTS (WALL THICKNESS) AS REQUIRED; WITH MINIMUM TRADE SIZE OF 3/4”. INSTALL ELECTRICAL RACEWAY SYSTEMS IN ACCORDANCE WITH MANUFACTURER’S WRITTEN INSTRUCTIONS AND APPLICABLE REQUIREMENTS OF NEC AND NECA “STANDARD OF INSTALLATION” IN ACCORDANCE WITH THE FOLLOWING:
    - A. FEEDERS: INSTALL FEEDERS RATED 100 AMPS AND GREATER, IN ELECTRICAL METALLIC CONDUIT (EMT); WHERE BURIED BELOW GRADE, INSTALL IN CONCRETE ENCASED N0N-METALIC CONDUIT OR DUCT (SCHEDULE 40 PVC).
    - B. BRANCH CIRCUITS, AND INDIVIDUAL EQUIPMENT CIRCUITS RATED LESS THAT 100 AMPS; INSTALL IN ELECTRICAL METALLIC TUBING (EMT). WHERE LOCATED IN POURED WALLS, BELOW CONCRETE SLAB-ON-GRADE, OR IN EARTH FILL, INSTALL IN NON-METALLIC PLASTIC DUCT (SCHEDULE 40 PVC). ENCASE NON-METALLIC PLASTIC DUCT 1-1/4” AND LARGER IN CONCRETE.
    - C. PROVIDE RIGID METAL CONDUIT (RMC) FOR ALL BENDS IN BURIED CONDUIT GREATER THAN 30 DEGREES. PROVIDE PROTECTIVE COATING FOR RIGID METAL CONDUIT BENDS.
    - D. INSTALL FLEXIBLE CONDUIT FOR CONNECTIONS TO MOTORS, TRANSFORMERS, AND OTHER ELECTRICAL EQUIPMENT WHERE SUBJECT TO MOVEMENT AND VIBRATIONS.
    - E. PROVIDE “OZ” EXPANSION FITTINGS ON ALL CONDUITS CROSSING BUILDING EXPANSION JOINTS, BOTH IN SLAB AND SUSPENDED.
    - F. DUCT BANKS” PROVIDE DUCT BANK CONSTRUCTION AS INDICATED USING 3000 PSI CONCRETE WITH RED MARKER DYE. INSTALL #4 REINFORCING BAR IN EACH CORNER OF DUCT BANK. PROVIDE MINIMUM OF 4” CONCRETE COVER ON ALL SIDES OF EXTERIOR CONDUITS.

ELECTRICAL BOXES AND FITTINGS

1. PROVIDE ONE PIECE GALVANIZED FLAT ROLLED SHEET STEEL INTERIOR OUTLET WIRING BOXES, CORROSION-RESISTANT CAST-METAL WEATHERPROOF OUTLET WIRING BOXES, CODE GAUGE SHEET STEEL JUNCTION AND PULL BOXES, GALVANIZED CAST IRON CONDUIT BODIES, CORROSION-RESISTANT PUNCH-STEEL BOX KNOCKOUT CLOSURES, CONDUIT LOCKOUTS AND MALLEABLE STEEL CONDUIT BUSHINGS AND OFFSET CONNECTORS, AND ALL ACCESSORIES AS REQUIRED TO SUIT EACH RESPECTIVE LOCATION AND INSTALLATION. FASTEN BOXES RIGIDLY TO SUBSTRATES OR STRUCTURAL SURFACES TO WHICH ATTACHED, OR SOLIDLY EMBED ELECTRICAL BOXES IN CONCRETE OR MASONRY. USE BAR HANGERS FOR STUD CONSTRUCTION.

ELECTRICAL SEISMIC CONTROL

1. **PROVIDE SEISMIC CONTROL EQUIPMENT INCLUDING BUT NOT LIMITED TO:** VIBRATION ISOLATORS, FLEXIBLE CONNECTIONS, RIGID STEEL FRAMES, ANCHORS, INSERTS AND ATTACHMENTS, SEISMIC SNUBBER AND BRACING TO MEET THE REQUIREMENTS FOR THE PROJECT SITE AS DESIGNED BY A PROFESSIONAL ENGINEER LICENSED IN THE STATE WHERE THE PROJECT IS LOCATED.
2. THE ABOVE REFERENCED ENGINEER SHALL DETERMINE SPECIFIC REQUIREMENTS FOR EQUIPMENT ANCHORAGE AND RESTRAINTS, LOCATIONS AND SIZES BASED ON SHOP DRAWINGS FOR THE ELECTRICAL EQUIPMENT WHICH HAVE BEEN SUBMITTED.
3. THE DIVISION 26 CONTRACTOR SHALL REQUIRE ALL EQUIPMENT SUPPLIER FURNISHED EQUIPMENT THAT MEETS THE SEISMIC CODE, WITH BASES/SKIDS/CURBS DESIGNED TO RECEIVE SEISMIC BRACING AND/OR ANCHORAGE.
4. **SPRING ISOLATED EQUIPMENT:** ALL VIBRATION ISOLATED EQUIPMENT SHALL BE MOUNTED ON RIGID STEEL FRAMES OR CONCRETE BASES. EACH SPRING MOUNTED BASE SHALL HAVE A MINIMUM OF FOUR ALL-DIRECTIONAL SEISMIC SNUBBERS THAT ARE DOUBLE ACTING AND LOCATED AS CLOSE TO THE VIBRATION ISOLATORS AS POSSIBLE TO FACILITATE ATTACHMENT BOTH TO THE BASE AND THE STRUCTURE.
5. **NON-ISOLATED EQUIPMENT:** THE DIVISION 26 CONTRACTOR SHALL BE RESPONSIBLE FOR THOROUGHLY REVIEWING ALL DRAWINGS AND SPECIFICATIONS TO DETERMINE ALL EQUIPMENT TO BE RESTRAINED. THIS CONTRACTOR SHALL BE RESPONSIBLE FOR CERTIFYING THAT THIS EQUIPMENT IS MOUNTED AND BRACED.
6. **CONDUIT:** A RIGID CONDUIT SYSTEM SHALL NOT BE BRACED TO DISSIMILAR PARTS OF THE BUILDING OR TWO DISSIMILAR BUILDING SYSTEMS THAT MAY RESPOND IN A DIFFERENT MODE DURING AN EARTHQUAKE. EXAMPLE: WALLS AND A ROOF; SOLID CONCRETE WALL AND A METAL DECK WITH LIGHTWEIGHT CONCRETE FILL. UNBRACED CONDUIT ATTACHED TO IN-LINE EQUIPMENT SHALL BE PROVIDED WITH ADEQUATE FLEXIBILITY TO ACCOMMODATE DIFFERENTIAL DISPLACEMENTS. PROVIDE LARGE ENOUGH PIPE SLEEVES THROUGH WALLS OR FLOORS TO ALLOW FOR ANTICIPATED DIFFERENTIAL MOVEMENTS.
7. **CABLE TRAY:** CABLE TRAYS SHALL BE SUSPENDED FROM ROD HANGERS AND HANGERS THAT ARE 12” IN LENGTH OR LONGER FROM POINT ROD ATTACHES TO TRAY, TO THE POINT ROD CONNECTS LOCATED AS CLOSE TO THE VIBRATION ISOLATORS AS POSSIBLE TO THE SUPPORTING STRUCTURE BOTH TO THE BASE AND TO THE VIBRATION ISOLATORS AS POSSIBLE TO FACILITATE ATTACHMENT AND THE STRUCTURE.
8. **NON-ISOLATED EQUIPMENT:** THE DIVISION 26 CONTRACTOR SHALL BE RESPONSIBLE FOR THOROUGHLY REVIEWING ALL DRAWINGS AND SPECIFICATIONS TO DETERMINE ALL EQUIPMENT TO BE RESTRAINED. THIS CONTRACTOR SHALL BE RESPONSIBLE FOR CERTIFYING THAT THIS EQUIPMENT IS MOUNTED AND BRACED.

ELECTRICAL IDENTIFICATION

1. PROVIDE ELECTRICAL IDENTIFICATION PRODUCTS FOR BURIED ELECTRICAL LINES, ARC-FLASH HAZARD LABELS (ANSI Z535.4), SOURCE OF SUPPLY LABELS, AVAILABLE FAULT CURRENT LABELS AND EMERGENCY OPERATING SIGNS TO EQUIPMENT INSTALLED AS PART OF THIS PROJECT.
2. COLOR ADHESIVE MARKING TAPE FOR RACEWAYS, WIRES AND CABLES: SELF-ADHESIVE VINYL TAPE NOT LESS THAN 3 MILLS THICK BY 1” TO 2” IN WIDTH.
3. UNDERGROUND LINE MARKING TAPE: PERMANENT, BRIGHT COLORED, CONTINUOUS-PRINTED, PLASTIC TAPE COMPOUNDED FOR DIRECT-BURIAL SERVICE NOT LESS THAN 6” WIDE BY 4 MILLS THICK.
4. ENGRAVED, PLASTIC LAMINATED LABELS, SIGNS AND INSTRUCTION PLATES: ENGRAVING STOCK PLASTIC LAMINATE, 1/16” MINIMUM THICKNESS FOR SIGNS UP TO 20” SQUARE, OR 8” IN LENGTH; 1/8” FOR LARGER SIZES. ENGRAVED LEGEND IN 1/4” HIGH WHITE LETTERS ON BLACK FACE.
5. PROVIDE LABELS ON COVER PLATES INDICATING SOURCE OF POWER (I.E. PANEL - CIRCUIT #) TO COMPLY WITH NEC 408.4.
6. PROVIDE CIRCUIT DIRECTORY THAT CLEARLY IDENTIFIES EACH AND EVERY CIRCUIT, TO COMPLY WITH NEC 408.
7. CONDUIT IDENTIFICATION
    1. IDENTIFY RACEWAYS OF SYSTEMS WITH COLOR CODING. ACCEPTABLE MEANS OF COLOR IDENTIFICATION ARE AS FOLLOWS:
        - A. COLORED ADHESIVE MARKING TAPE
        - B. FIELD PAINTED FITTINGS IE: COUPLINGS AND CONNECTORS
        - C. COLOR RACEWAYS FOR THE FOLLOWING SYSTEMS:

          FIRE ALARM SYSTEM: RED
          SOUND/IC: BLUE
          TELEPHONE: YELLOW
          DATA: GREEN
          SECURITY: ORANGE
    1. IDENTIFY JUNCTION, PULL AND CONNECTION BOXES
        - A. PROVIDE COVERPLATES FOR SYSTEMS JUNCTION, PULL AND CONNECTIONS BOXES PAINTED TO MATCH REQUIREMENTS ABOVE.
        - B. FOR POWER AND LIGHTING JUNCTION BOXES LABEL WITH IDENTITY OF CONTAINED CIRCUITS.

PROTECTIVE DEVICE STUDY

1. PROVIDE PROTECTIVE DEVICE AND ARC-FLASH HAZARD STUDIES PERFORMED BY QUALIFIED ENGINEERS OF THE EQUIPMENT MANUFACTURER OR AN APPROVED CONSULTANT. STUDIES MUST BEAR THE PROFESSIONAL ENGINEER'S STAMP OF THE ENGINEER RESPONSIBLE OF THE PROTECTIVE DEVICE STUDIES. PERFORM ALL WORK IN ACCORDANCE WITH LATEST IEEE AND ANSI STANDARDS.
2. FAULT CURRENT PROTECTIVE DEVICE & EQUIPMENT EVALUATION:
    - A. PERFORM FAULT CURRENT ANALYSIS WITH THE AID OF THE COMPUTER AND APPROPRIATE SOFTWARE. INCLUDES INPUT DATA THE MAXIMUM AVAILABLE SHORT CIRCUIT DISTRIBUTION, RESISTANCE AND REACTANCE COMPONENTS OF THE BRANCH IMPEDANCES, THEX/R RATIOS, BASE QUANTITIES SELECTED, AND OTHER SOURCE IMPEDANCES.
3. PROTECTIVE DEVICE COORDINATION STUDY:
    - A. PERFORM A PROTECTIVE DEVICE COORDINATION STUDY INCLUDING THE NESSAERY CALCULATIONS AND LOGIC DECISIONS REQUIRED TO SELECT POWER FUSE RATINGS, PROTECTIVE RELAY CHARACTERISTICS AND SETTINGS, RATIOS AND CHARACTERISTICS OF ASSOCIATED CURRENT TRANSFORMERS, AND LOW VOLTAGE BREAKER TRIP CHARACTERISTICS AND SETTINGS, PERFORM THE STUDIES IN ACCORDANCE WITH THE LATEST APPLICABLE IEEE AND ANSI STANDARDS.
4. ARC-FLASH HAZARD ANALYSIS AND STUDY:
    - A. PERFORM AND ARC-FLASH HAZARD ANALYSIS AND STUY. INCLUDE THE NECESSARY CALCULATIONS REQUIRED TO DETERMINE THE LEVEL OF PERSONAL PROTECTION EQUIPMENT (PPE) THAT A WORKER MUST USE, THE ARC-FLASH BOUNDARY IN INCHES, AND THE INCIDENT ENERGY AT EACH LOCATION. THIS INFORMATION SHALL BE CALCULATED AND DETERMINED FOR EACH PIECE OF SERVICE EQUIPMENT, EACH POWER DISTRIBUTION SWITCHBOARD OR PANEL. EACH SEPERATELY MOUNTED CIRCUIT BREAKER, EACH MOTOR CONTROL CENTER, EACJ INDIVIDUALLY MOUNTED MOTOR STARTER, AND EACH BRANCH PANELBOARD.

OCCUPANCY SENSORS

1. PROVIDE OCCUPANCY SENSORS AS INDICATED ON THE DRAWINGS. PROVIDE WITH THE REQUIRED POWER PACKS FOR AN OPERATIONAL SYSTEM. PROVIDE OCCUPANCY SENSORS WHICH HAVE BEEN UL LISTED AND LABELED.
    - A. DUAL TECHNOLOGY WALL SWITCH: SENSOR SHALL INCORPORATE ULTRASONIC AND INFRARED TECHNOLOGIES IN A SINGLE UNIT. SENSOR SHALL HAVE AUTOMATIC SELF-ADJUSTMENT ALGORITHM WHICH ADJUSTS TIMER AND SENSITIVITY SETTINGS TO MAXIMIZE PERFORMANCE AND MINIMIZE ENERGY USAGE. SENSOR SHALL FIT IN A SINGLE GANG SWITCH BOX AND UTILIZE A DECORATOR COVER PLATE. SENSOR SHALL HAVE A 170 DEGREE FIELD OF VIEW.
    - B. DUAL TECHNOLOGY WALL SWITCH WITH DIMMING: SENSOR SHALL INCORPORATE ULTRASONIC AND INFRARED TECHNOLOGIES IN A SINGLE UNIT. SENSOR SHALL HAVE AUTOMATIC SELF-ADJUSTMENT ALGORITHM WHICH ADJUSTS TIMER AND SENSITIVITY SETTINGS TO MAXIMIZE PERFORMANCE AND MINIMIZE ENERGY USAGE. SENSOR SHALL FIT IN A SINGLE GANG SWITCH BOX AND UTILIZE A DECORATOR COVER PLATE. SENSOR SHALL HAVE A 170 DEGREE FIELD OF VIEW. SENSOR SHALL INCORPORATE RAISE/LOWER BUTTONS TIED TO 0-10 VOLT DIMMING LEADS.
    - C. DUAL TECHNOLOGY CEILING SENSOR: SENSOR SHALL INCORPORATE ULTRASONIC AND INFRARED TECHNOLOGY IN A SINGLE UNIT. SENSOR SHALL HAVE AUTOMATIC SELF-ADJUSTMENT ALGORITHM WHICH ADJUSTS TIMER AND SENSITIVITY SETTINGS TO MAXIMIZE PERFORMANCE AND MINIMIZE ENERGY USAGE. SENSOR LENS SHALL HAVE A 360 DEGREE FIELD OF VIEW.

TRANSFORMERS

1. PROVIDE FACTORY ASSEMBLED, GENERAL-PURPOSE, AIR-COOLED DRY-TYPE DISTRIBUTION TRANSFORMERS AS REQUIRED. PROVIDE WITH COPPER (ALUMINUM) WINDINGS WHERE PRIMARY WINDINGS HAS A MINIMUM OF 4 FULL CAPACITY TAPS AT 2.5 PERCENT, TWO ABOVE AND TWO BELOW FULL RATED VOLTAGE FOR DE-ENERGIZING TAP-CHANGING OPERATION. INSULATE WITH CLASS 150 DEGREES INSULATION AND RATE FOR CONTINUOUS OPERATION AT RATED KVA. LIMIT TRANSFORMER TEMPERATURE RISE TO 115 DEGREES C. SOUND LEVELS SHALL NOT EXCEED 45 DB. PROVIDE 4” HIGH CONCRETE PAD AND BOLT EQUIPMENT TO PAD.

SWITCHGEAR AND SWITCHBOARDS

1. PROVIDE FACTORY ASSEMBLED, DEAD FRONT, METAL ENCLOSED, GROUP MOUNTED, SECONDARY POWER SWITCHBOARDS, OF RATINGS AND CHARACTERISTICS INDICATED, CONSISTING OF PANEL (VERTICAL) UNITS, AND CONTAINING CIRCUIT BREAKER AND/OR FUSIBLE SWITCH ASSEMBLIES.
    - A. TEST SWITCHGEAR AND SWITCHBOARD FOR ELECTRICAL CONTINUITY OF CIRCUITS, AND FOR SHORT CIRCUITS.

PANELBOARDS

1. PROVIDE GALVANIZED SHEET STEEL CABINET TYPE ENCLOSURES, IN SIZES AND NEMA TYPES AS INDICATED, CODE-GAUGE MINIMUM 16 -GAUGE THICKNESS. PROVIDE DEAD FRONT SAFETY TYPE PANELBOARDS WITH DOOR-IN-DOOR HINGED FRONTS. EQUIP WITH COPPER (ALUMINUM) BUS BARS, FULL-SIZED NEUTRAL AND GROUND BUS. PROVIDE ENCLOSURES FABRICATED BY THE SAME MANUFACTURER AS OVERCURRENT DEVICES. BOLT ENGRAVED PLASTIC LAMINATE LABELS INDICATING PANEL NAME AND VOLTAGE ON THE INTERIOR AND EXTERIOR OF PANELBOARD.

WIRING DEVICES

1. PROVIDE SPEC GRADE FACTORY-FABRICATED WIRING DEVICES, IN TYPE, AND ELECTRICAL RATINGS FOR APPLICATIONS INDICATING AND COMPLYING WITH NEMA STDS PUB NO. WD-1. PROVIDE HEAVY DUTY SPECIFICATION GRADE, 20-AMPERES RATED, GROUNDING TYPE CONVENIENCE OUTLETS. PROVIDE 20-AMPRESE RATED TOGGLE SWITCHES. CONSTRUCT WIRING DEVICE OF HEAVY-DUTY HIGH IMPACT NYLON AND PROVIDE COVER PATES TO MATCH. PROVIDE DEVICES AND COLORS SELECTED BY ARCHITECT.
2. PROVIDE THE FOLLOWING:
    - A. CONTROLLED RECEPTACLE - NEMA 5-20R TO COMPLY WITH NEC 406.3(F).
    - B. GROUND FAULT INTERRUPTER - NEMA 5020R WITH 5 MILIAMPERIS GROUND FAULT TRIP LEVEL.
    - C. USB RECEPTACLE - NEMA 5-20R WITH (2) USB, 5VDC, 2.0 AND 3.0 TYPE A AND TYPE C PORTS.
    - D. TAMPER RESISTANT RECEPTACLE - NEMA 5-20R TO COMPLY WITH NEC 406.12.
    - E. WEATHER-RESISTANT RECEPTACLE - NEMA 5-20R TO COMPLY WITH NEC 406.9.
    - F. WEATHER PROTECTIVE DEVICE ENCLOSURE - PROVIDE IN-USE COVER TO COMPLY WITH NEC 406.9.

OVERCURRENT PROTECTIVE DEVICES

1. PROVIDE OVERCURRENT PROTECTIVE DEVICES OF THE SAME MANUFACTURER AS THE SWITCHBOARD AND/OR PANELBOARD MANUFACTURER. PROVIDE FACTORY ASSEMBLED DEVICES OF AMPERAGE, VOLTAGE, AND RMS INTERRUPTING RATING SHOWN. PROVIDE DEVICES AS FOLLOWS:
    - A. MOLDED CASE THERMAL TRIP CIRCUIT BREAKERS:
        - a. PROVIDE FACTORY-ASSEMBLED BOLT-ON MOLDED CASE CIRCUIT BREAKER WITH PERMANENT THERMAL TRIP AND ADJUSTABLE INSTANTANEOUS MAGNETIC TRIP IN EACH POLE. SERIES RATING IS NOT ACCEPTABLE. CONSTRUCT BREAKERS FOR MOUNTING AND OPERATING IN ANY PHYSICAL POSITION AND IN AN AMBIENT TEMPERATURE OF 40 DEGREES C.
        - b. CIRCUIT BREAKERS 15 AMPS THROUGH 599 AMPS SHALL BE MOLDED CASE THERMAL CIRCUIT BREAKERS
    - B. MOLDED CASE SOLID STATE CIRCUIT BREAKERS
        - a. PROVIDE FACTORY ASSEMBLED BOLT-ON MOLDED CASE CIRCUIT BREAKERS UL LISTED FOR APPLICATION AT 100% OF THEIR RATED CONTINUOUS AMPERE RATING.
        - b. CIRCUIT BREAKERS 600 AMPS THROUGH 1199 AMPS SHALL BE MOLDED CASE SOLID-STATE CIRCUIT BREAKERS.
        - c. SOLID-STATE TRIP MECHANISMS SHALL HAVE THE FOLLOWING FUNCTIONS: ADJUSTABLE LONG TIME AMPERE RATING; ADJUSTABLE LONG TIME DELAY; SHORT TIME PICK-UP; ADJUSTABLE SHORT TIME DELAY; ADJUSTABLE INSTANTANEOUS PICK-UP.

MOTOR AND CIRCUIT DISCONNECTS

1. PROVIDE HEAVY-DUTY TYPE SAFETY SWITCHES; FUSIBLE OR NON-FUSIBLE AS INDICATED. PROVIDE SWITCHES RATED AT 600 VOLTS, 60 HZ.; INCORPORATING QUICK-MAKE, QUICK-BREAK TYPE MECHANISMS. EQUIP WITH OPERATING HANDLE THAT IS CAPABLE OF BEING PADLOCKED IN THE OFF POSITION. PROVIDE NEMA ENCLOSURE RATINGS BASED ON LOCATION OF INSTALLATION.

MOTOR STARTERS

1. PROVIDE FACTORY ASSEMBLED, AC-NON-RESERVING MAGNETIC STARTERS RATED AT 600V WITH THERMAL OVERLOAD PROTECTION IN ALL PHASES. MOUNT HAND-OFF-AUTO SWITCH, RED PILOT LIGHT, AND RESET BUTTON IN FACE OF ENCLOSURE. PROVIDE NEMA ENCLOSURES RATINGS BASED ON LOCATION OF INSTALLATION.

INTERIOR AND EXTERIOR BUILDING LIGHTING

1. PROVIDE LIGHTING FIXTURES COMPLETE WITH ALL COMPONENTS FOR EACH SIZE, TYPE, AND RATING INDICATED. THIS INCLUDES, BUT NOT LIMITED TO HOUSING, DRIVER, REFLECTORS, AND WIRING. SIZE FUSES PER BALLAST MANUFACTURER’S RECOMMENDATIONS. PROVIDE ALL NECESSARY SUPPORTS, BRACKETS, AND MISCELLANEOUS EQUIPMENT FOR THE MOUNTING OF FIXTURES. SUPPORT ALL GRID MOUNTED FIXTURES FROM THE BUILDING STRUCTURE WITH #12GA. STEEL WIRE ATTACHED TO EACH CORNER; INDEPENDENT OF THE CEILING SYSTEM. PROVIDE BACKING SUPPORTS. PROVIDE GYPSUM BOARD PROTECTION AS REQUIRED TO MAINTAIN FIRE RATING OF EACH CEILING IN WHICH FIXTURES ARE INSTALLED. PROVIDE ALL EXTERIOR FIXTURES WITH DAMP OR WET LOCATION LABEL AS REQUIRED BY APPLICATION. PROVIDE CLASS 2 WIRING FOR ALL FIXTURES INDICATED TO HAVE 0-10 DIMMING.

TELECOMMUNICATIONS SYSTEMS RACEWAYS

1. PROVIDE A COMPLETE RACEWAY SYSTEM INCLUDING BUT NOT LIMITED TO: RACEWAY, OUTLETS, COVER PLATES, BACKBOARDS, GROUNDING, AND MISCELLANEOUS ITEMS AS REQUIRED.
2. PROVIDE (1) 1” EMT CONDUIT FROM EACH TELEPHONE AND DATA DEVICE TO CABLE TRAY OR TELECOM RACK (WHICHEVER IS CLOSER). COMPLY WITH NEC, BICSI, AND RECOGNIZED INDUSTRY PRACTICES. PROVIDE NYLON PULL CORD IN ALL INSTALLED RACEWAY.
3. PROVIDE (1) #6 BARE COPPER GROUND FROM EACH TERMINAL BOARD TO THE SERVICE ENTRANCE GROUND. COIL SIX FEET OF CONDUCTOR AT EACH TERMINAL BOARD.

SECURITY SYSTEM RACEWAYS

1. PROVIDE A COMPLETE RACEWAY SYSTEM INCLUDING BUT NOT LIMITED TO: RACEWAY, OUTLETS, COVER PLATES, BACKBOARDS, GROUNDING, AND MISCELLANEOUS ITEMS AS REQUIRED.
2. PROVIDE (1) 3/4” EMT CONDUIT FROM EACH SECURITY DEVICE TO CABLE TRAY OR TERMINAL CABINET (WHICHEVER IS CLOSER). COMPLY WITH NEC, BICSI, AND RECOGNIZED INDUSTRY PRACTICES. PROVIDE NYLON PULL CORD IN ALL INSTALLED RACEWAY.
3. PROVIDE (1) #6 BARE COPPER GROUND FRAM EACH SECURITY SYSTEM TERMINAL BOARD TO THE SERVICE ENTRANCE GROUND. COIL SIX FEET OF CONDUCTOR AT EACH TERMINAL BOARD.

FIRE ALARM AND DETECTION SYSTEMS

1. PROVIDE AN ADDRESSABLE, ELECTRICALLY SUPERVISED FIRE ALARM SYSTEM WITH ALL APPLICABLE PROVISIONS OF THE CURRENT NFPA 72, NATIONAL FIRE ALARM CODE, IFC INTERNATIONAL FIRE CODE AND SHALL MEET ALL REQUIREMENTS OF THE LOCAL AUTHORITY HAVING JURISDICTION. PROVIDE A MINIMUM OF #14 AWG COPPER WIRING IN 3/4” CONDUIT. FIRE ALARM MC IS NOT ALLOWED.

BNA CONSULTING
4225 Lake Park Blvd, Suite 275
West Valley City, UT 84120

P: 801.532.2196
F: 801.532.2305

www.bnaconsulting.com

SALT LAKE ST. GEORGE

KCC STORES WAREHOUSE

2010 N. RULON WHITE BLVD.
FARR WEST, UT 84404

BRIAN HICKS

REVISIONS		
MARK	DATE	DESCRIPTION
1	11.4.24	PLAN REVIEW

DATE: 04 OCT 2024
PROJECT NO: EA24022TP
DRAWN BY: Author
CHK'D BY: Checker

ELECTRICAL SPECIFICATIONS

E-003

THIS PRINT IS IN BLACK & WHITE

SHEET KEYNOTES

S1	EXISTING POWER DUCT BANK TO REMAIN. COORDINATE PROTECTION DURING CONSTRUCTION ACTIVITIES.
S2	EXISTING POWER FEED TO DIESEL PUMP HOUSE TO REMAIN. COORDINATE PROTECTION DURING CONSTRUCTION ACTIVITIES.
S3	INTERCEPT EXISTING MUSTER STATION AND LIGHT POLE FEEDS. REROUTE FEEDS (2 3/4" CONDUITS, 1 WITH #10 WIRE FOR LIGHT POLE AND 1 WITH PULL STRINGS FOR MUSTER STATION) AROUND NEW BUILDING.
S4	PROVIDE (2) 2" CONDUITS FOR NORMAL POWER FEED. SEE ONE-LINE DIAGRAM SHEET E-401 FOR ADDITIONAL REQUIREMENTS.
S5	PROVIDE (1) 1" CONDUIT FOR EMERGENCY POWER FEED. SEE ONE-LINE DIAGRAM SHEET E-401 FOR ADDITIONAL REQUIREMENTS.
S6	PROVIDE (1) 1" CONDUIT WITH (4) CAT6 CABLES FOR ACCESS CONTROL. PROVIDE (2) 3/4" CONDUITS FOR FIRE ALARM.
Y3	PROVIDE A 1" CONDUIT STUBBED FOR PEDISTAL LOCATION TO ACCESS CONTROL STUB LOCATION.

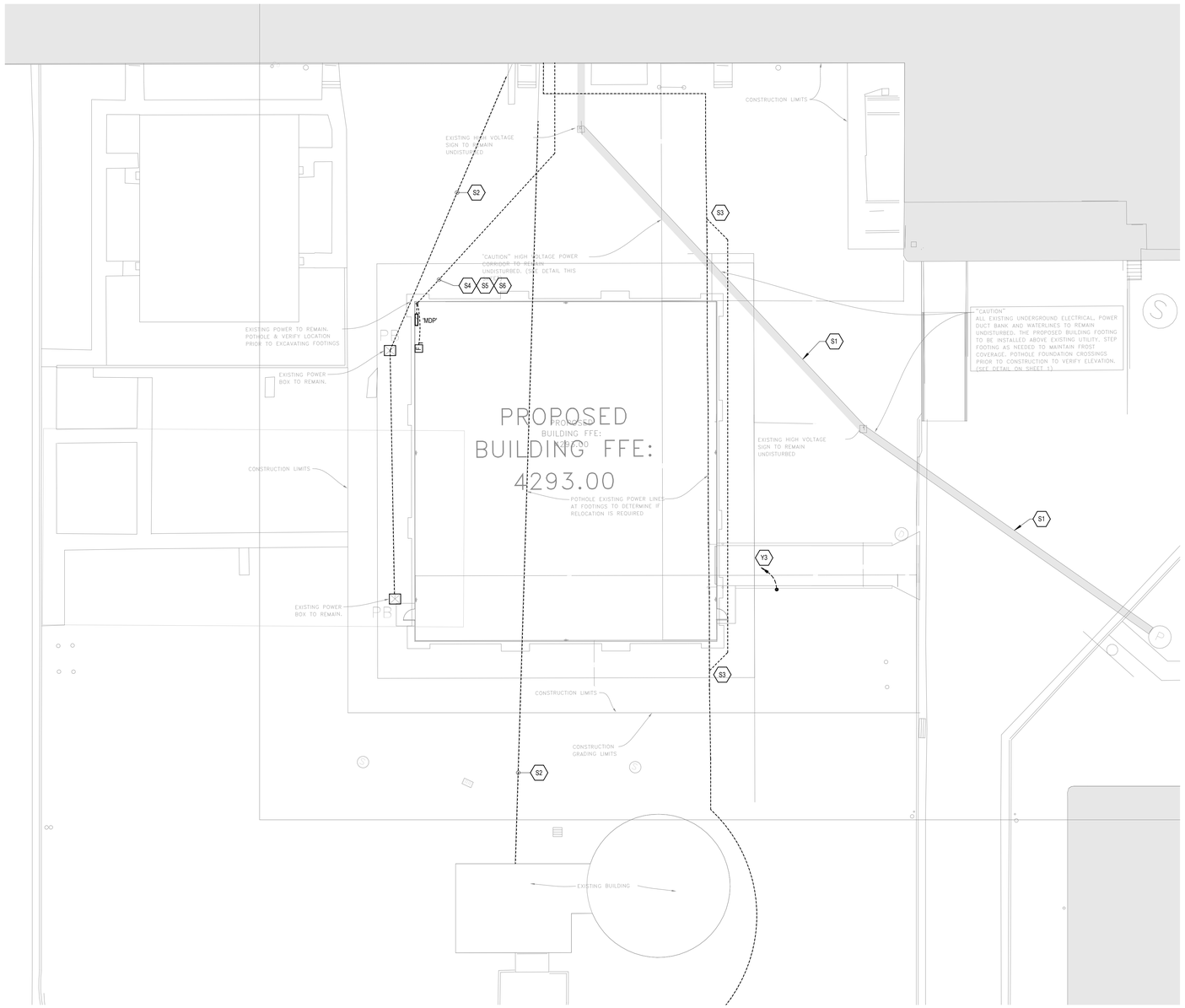

ELECTRICAL SITE PLAN

SCALE = 1/16" = 1'-0"

BNA CONSULTING
4225 Lake Park Blvd, Suite 275
West Valley City, UT 84120
P: 801.532.2196
F: 801.532.2305
www.bnaconsulting.com
SALT LAKE ST. GEORGE

KCC STORES WAREHOUSE

2010 N. RULON WHITE BLVD.
FARR WEST, UT 84404

REVISIONS

MARK	DATE	DESCRIPTION

DATE:	04 OCT 2024
PROJECT NO:	EA24022TP
DRAWN BY:	CD
CHK'D BY:	RLW

ELECTRICAL SITE PLAN

E-101

THIS PRINT IS IN BLACK & WHITE

LIGHTING SENSOR GENERAL NOTES

1. THE ELECTRICAL CONTRACTOR SHALL BE RESPONSIBLE FOR CONTACTING THE SENSOR MANUFACTURER FOR PROPER PLACEMENT AND ADJUSTMENT OF OCCUPANCY SENSORS.
2. EACH ZONE SHALL HAVE COVERAGE BY OCCUPANCY SENSOR SUCH THAT NO BLIND SPOT EXIST.
3. UPON COMPLETION OF THE INSTALLATION, THE SYSTEM SHALL BE COMPLETELY COMMISSIONED BY THE MANUFACTURER'S FACTORY AUTHORIZED TECHNICIAN WHO WILL VERIFY ALL ADJUSTMENTS AND SENSOR PLACEMENT TO ENSURE A TROUBLE-FREE INSTALLATION.
4. THE LOCATION AND QUANTITIES OF SENSORS SHOWN ON THE DRAWINGS ARE DIAGRAMMATIC AND INDICATE ONLY THE ROOMS WHICH ARE TO BE PROVIDED WITH SENSORS. THE ELECTRICAL CONTRACTOR SHALL PROVIDE ADDITIONAL SENSORS IF REQUIRED TO PROPERLY COVER THE RESPECTIVE ROOM.
5. PROVIDE DAYLIGHT ZONE CONTROL REQUIREMENTS PER CURRENT IECC REQUIREMENTS. LOCATE DAYLIGHT SENSOR(S) PER MANUFACTURER'S RECOMMENDATION AND WHERE REQUIRED WITHIN THE ROOM FOR PROPER COVERAGE.
6. PROVIDE OCCUPANCY SENSOR WITH AN ADDITIONAL SET OF DRY CONTACTS FOR HVAC CONTROL AT EACH VAV BOX LOCATION. COORDINATE WITH MECHANICAL DRAWINGS AND THE MECHANICAL CONTRACTOR FOR EXACT LOCATIONS.

SHEET KEYNOTES

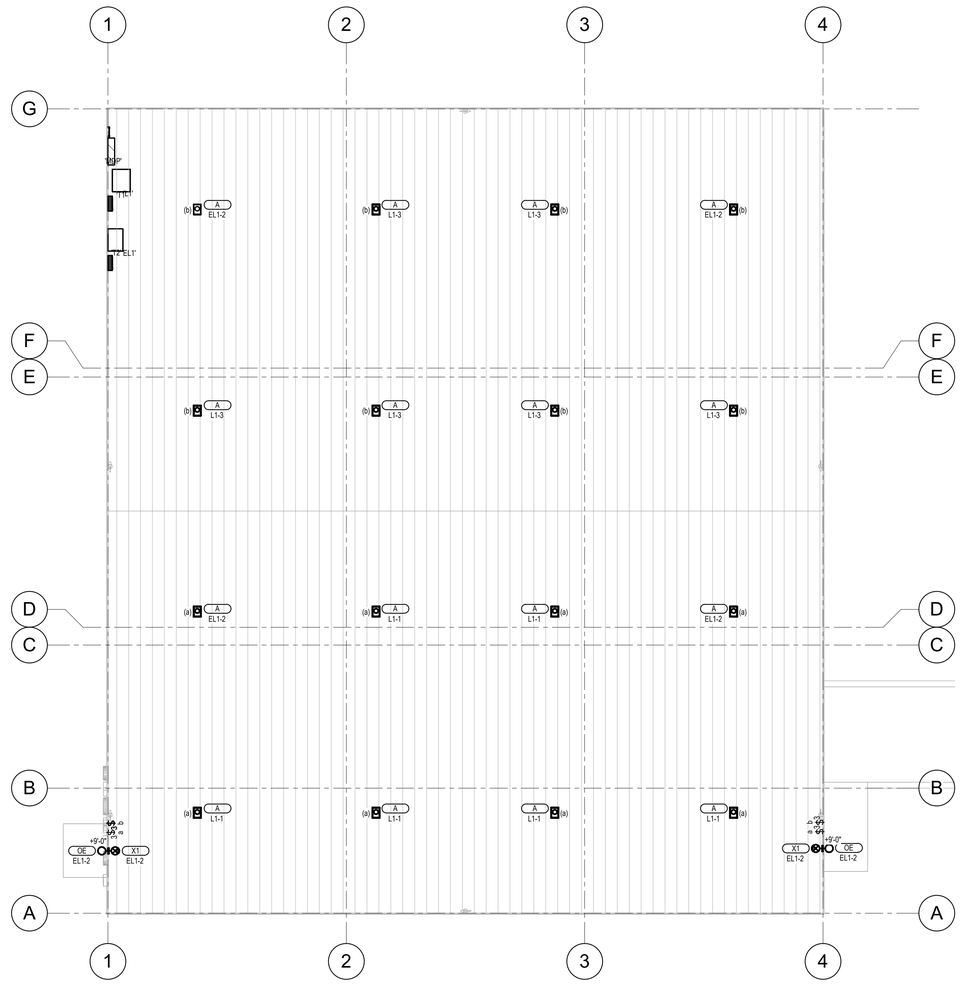

LIGHTING PLAN
SCALE = 1/8" = 1'-0"

BNA CONSULTING
4225 Lake Park Blvd, Suite 275
West Valley City, UT 84120
P: 801.532.2196
F: 801.532.2305
www.bnaconsulting.com
SALT LAKE ST. GEORGE

KCC STORES WAREHOUSE

2010 N. RULON WHITE BLVD.
FARR WEST, UT 84404

PROFESSIONAL ENGINEER
BRIAN HICKS
No. 7708035-2202
STATE OF UTAH

REVISIONS

MARK	DATE	DESCRIPTION
1	11.4.24	PLAN REVIEW

DATE:	04 OCT 2024
PROJECT NO:	EA24022TP
DRAWN BY:	CALVIN
CHK'D BY:	RICHARD

LIGHTING PLAN

E-201

THIS PRINT IS IN BLACK & WHITE

SHEET KEYNOTES

E1	PROVIDE 30' OF 3/0 BARE COPPER IN BUILDING FOOTING. SEE DIAGRAM F020/E-501.
E2	PROVIDE A HUBBELL "HBL460MI7W" CIRCUIT LOCK WELDING OUTLET.
~~E3~~	~~VARIABLE FREQUENCY DRIVE FOR CEILING FANS ON 1 AND 2 E~~
~~Y1~~	~~PROVIDE A 1-CIR CONDUIT FROM DOOR LOCATION TO ACCESS CONTROL SYSTEM LOCATION.~~
Y2	PROVIDE A 1" CONDUIT STUBBED OUT OF BUILIDNG (SEE SHEET E-101) FOR CONTINUATION FOR ACCESS CONTROL.
Y4	PROVIDE A 1" CONDUIT FOR CAMERA LOCATION.

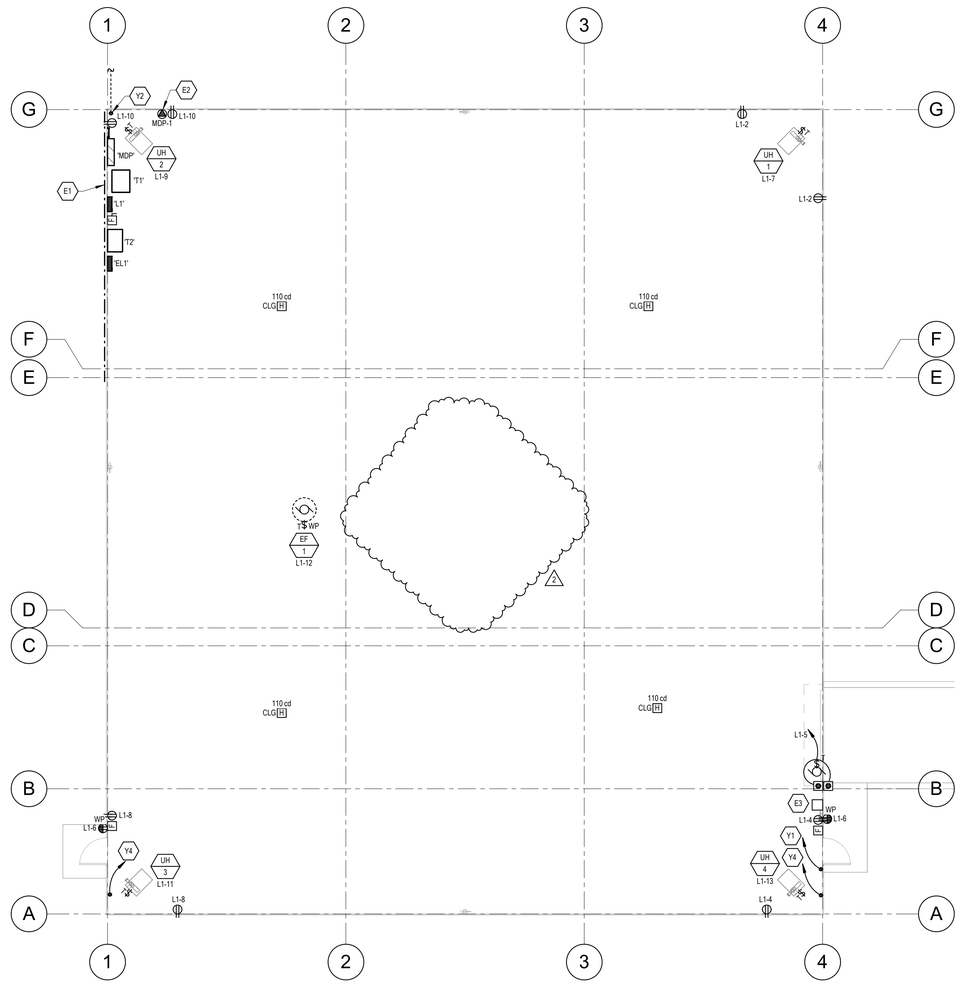

POWER PLAN
SCALE = 1/8" = 1'-0"

BNA CONSULTING
4225 Lake Park Blvd, Suite 275
West Valley City, UT 84120
P: 801.532.2196
F: 801.532.2305
www.bnaconsulting.com
SALT LAKE ST. GEORGE

KCC STORES WAREHOUSE
2010 N. RULON WHITE BLVD.
FARR WEST, UT 84404

PROFESSIONAL ENGINEER
BRIAN HICKS
No. 7709035-2202
STATE OF UTAH

REVISIONS

MARK	DATE	DESCRIPTION
1	11.4.24	PLAN REVIEW
2	11.20.24	REVISION 1

DATE:	04 OCT 2024
PROJECT NO:	EA24022TP
DRAWN BY:	BIM LEAD
CHK'D BY:	ENGINEER

POWER PLAN

E-301

PANELBOARD SCHEDULE

PANEL: L1 | TYPE: Type 1 | VOLTS: 120/208 Y | PHASE: 3 | WIRES: 4

MOUNTING: SURFACE
BUSSING: CU

LOCATION: WAREHOUSE 101
FED FROM: T1
AMP: 100 A

MAINS: MB
____ SUBFEED LUGS
____ DOOR-IN-DOOR
____ ISO GROUND
____ 200% NEUTRAL
____ SPD

BRANCH BREAKERS

ITEM	AMPS	TYPE	POLE	WIRE SIZE	CIR. NO.	A	B	C	A	B	C	CIR. NO.	WIRE SIZE	POLE	TYPE	AMPS	ITEM
LIGHTING - HIGH BAY	20 A		1	12	1	1014			360			2	12	1		20 A	RECEPTACLES
LIGHTING - HIGH BAY	20 A		1	12	3		1014			360		4	12	1		20 A	RECEPTACLES
OVERHEAD DOOR	20 A		1	12	5			1200			360	6	12	1		20 A	RECEPTACLES
UH-1 UNIT HEATER	20 A		1	12	7	480			360			8	12	1		20 A	RECEPTACLES
UH-2 UNIT HEATER	20 A		1	12	9		480			360		10	12	1		20 A	RECEPTACLES
UH-3 UNIT HEATER	20 A		1	12	11			480			1961	12	10	1		25 A	EF-1 EXHAUST FAN
UH-4 UNIT HEATER	20 A		1	12	13	480			0			14	--	1	--	20 A	SPARE
SPACE ONLY	--	--	1	--	15		--			--		16	--	1	--	--	SPACE ONLY
SPACE ONLY	--	--	1	--	17			--			--	18	--	1	--	--	SPACE ONLY
SPACE ONLY	--	--	1	--	19	--			--			20	--	1	--	--	SPACE ONLY
SPACE ONLY	--	--	1	--	21		--			--		22	--	1	--	--	SPACE ONLY
SPACE ONLY	--	--	1	--	23			--			--	24	--	1	--	--	SPACE ONLY
SPACE ONLY	--	--	1	--	25	--			--			26	--	1	--	--	SPACE ONLY
SPACE ONLY	--	--	1	--	27		--			--		28	--	1	--	--	SPACE ONLY
SPACE ONLY	--	--	1	--	29			--			--	30	--	1	--	--	SPACE ONLY
						2694	2214	4001	TOTAL (VA)								
						23 A	18 A	34 A	AMPS/PHASE								

FEED THRU LOAD: 0 VA
CONNECTED LOAD TOTAL: 8909 VA

AIC RATING: 10,000 AMPS RMS SYSM.

NOTES:

CIRCUIT BREAKER TYPE:

<BLANK>	THERMAL MAGNETIC CIRCUIT BREAKER
GF	5 mA GROUND FAULT CIRCUIT BREAKER
AF	ARC-FAULT CIRCUIT BREAKER
CO	COMBINATION AFCI/GFCI CIRCUIT BREAKER
EG	30 mA EQUIPMENT GROUND FAULT CIRCUIT BREAKER
ST	SHUNT TRIP CIRCUIT BREAKER

PANELBOARD SCHEDULE

PANEL: EL1 | TYPE: Type 1 | VOLTS: 120/208 Y | PHASE: 3 | WIRES: 4

MOUNTING: SURFACE
BUSSING: CU

LOCATION: WAREHOUSE 101
FED FROM: T2
AMP: 100 A

MAINS: MB
____ SUBFEED LUGS
____ DOOR-IN-DOOR
____ ISO GROUND
____ 200% NEUTRAL
____ SPD

BRANCH BREAKERS

ITEM	AMPS	TYPE	POLE	WIRE SIZE	CIR. NO.	A	B	C	A	B	C	CIR. NO.	WIRE SIZE	POLE	TYPE	AMPS	ITEM
SPARE	20 A	--	2	--	1	0			722			2	12	1		20 A	EMERGENCY LIGHTING
--	--	--	--	--	3		0			0		4	--	1	--	20 A	SPARE
SPARE	20 A	--	1	--	5			0			0	6	--	1	--	20 A	SPARE
SPARE	20 A	--	1	--	7	0			0			8	--	1	--	20 A	SPARE
SPARE	20 A	--	1	--	9		0			0		10	--	1	--	20 A	SPARE
SPARE	20 A	--	1	--	11			0			0	12	--	1	--	20 A	SPARE
SPARE	20 A	--	1	--	13	0			0			14	--	1	--	20 A	SPARE
SPACE ONLY	--	--	1	--	15		--			--		16	--	1	--	--	SPACE ONLY
SPACE ONLY	--	--	1	--	17			--			--	18	--	1	--	--	SPACE ONLY
SPACE ONLY	--	--	1	--	19	--			--			20	--	1	--	--	SPACE ONLY
SPACE ONLY	--	--	1	--	21		--			--		22	--	1	--	--	SPACE ONLY
SPACE ONLY	--	--	1	--	23			--			--	24	--	1	--	--	SPACE ONLY
SPACE ONLY	--	--	1	--	25	--			--			26	--	1	--	--	SPACE ONLY
SPACE ONLY	--	--	1	--	27		--			--		28	--	1	--	--	SPACE ONLY
SPACE ONLY	--	--	1	--	29			--			--	30	--	1	--	--	SPACE ONLY
						722	0	0	TOTAL (VA)								
						6 A	0 A	0 A	AMPS/PHASE								

FEED THRU LOAD: 0 VA
CONNECTED LOAD TOTAL: 722 VA

AIC RATING: 10,000 AMPS RMS SYSM.

NOTES:

CIRCUIT BREAKER TYPE:

<BLANK>	THERMAL MAGNETIC CIRCUIT BREAKER
GF	5 mA GROUND FAULT CIRCUIT BREAKER
AF	ARC-FAULT CIRCUIT BREAKER
CO	COMBINATION AFCI/GFCI CIRCUIT BREAKER
EG	30 mA EQUIPMENT GROUND FAULT CIRCUIT BREAKER
ST	SHUNT TRIP CIRCUIT BREAKER

SWITCHBOARD SCHEDULE

Switchboard: MDP

LOCATION: WAREHOUSE 101
SUPPLY FROM:
MOUNTING: WALL
ENCLOSURE: I-LINE
BUSSING: AL

VOLTS: 480/277 Y
PHASE: 3
WIRES: 3

AIC RATING: 14,000
MAINS TYPE: MCB
MAINS RATING: 400 A
DOOR-IN-DOOR
200% NEUTRAL: N
SPD: N

CKT	CIRCUIT DESCRIPTION	# OF POLES	AMP RATING	A	B	C	REMARKS
1	WELDING OUTLET	3	20 A	11080 VA	11080 VA	11080 VA	
2	TRANSFORMER T1	3	100 A	2694 VA	2214 VA	4001 VA	
3	SPARE	3	15 A	0 VA	0 VA	0 VA	
4	SPARE	3	20 A	0 VA	0 VA	0 VA	
5	SPARE	3	20 A	0 VA	0 VA	0 VA	
6	SPARE	3	100 A	0 VA	0 VA	0 VA	
7	SPARE	3	200 A	0 VA	0 VA	0 VA	
8	SPARE	3	200 A	0 VA	0 VA	0 VA	
9	SPARE	3	200 A	0 VA	0 VA	0 VA	
10	SPARE	3	200 A	0 VA	0 VA	0 VA	
11	SPARE	3	200 A	0 VA	0 VA	0 VA	
12	SPACE ONLY	3	--	--	--	--	
13	SPACE ONLY	3	--	--	--	--	
14	SPACE ONLY	3	--	--	--	--	
15	SPACE ONLY	3	--	--	--	--	
16	SPACE ONLY	3	--	--	--	--	
17	SPACE ONLY	3	--	--	--	--	
18	SPACE ONLY	3	--	--	--	--	
			TOTAL LOAD (VA):	13774 VA	13294 VA	15081 VA	
			TOTAL LOAD (AMPS):	50 A	48 A	55 A	

TOTAL CONN. LOAD:	42149 VA
TOTAL CURRENT (AVG):	51 A

NOTES:

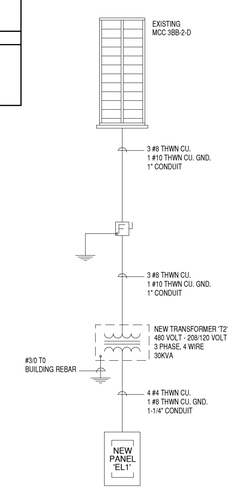

ONE-LINE DIAGRAM (EMERGENCY)
NO SCALE

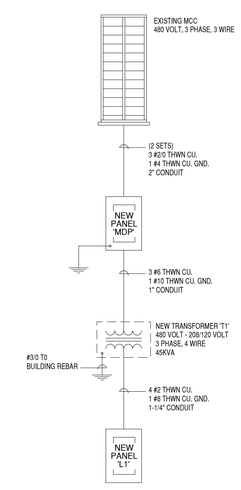

ONE-LINE DIAGRAM (NORMAL)
NO SCALE

BNA CONSULTING
4225 Lake Park Blvd, Suite 275
West Valley City, UT 84120
P: 801.532.2196
F: 801.532.2305
www.bnaconsulting.com
SALT LAKE ST. GEORGE

KCC STORES WAREHOUSE
2010 N. RULON WHITE BLVD.
FARR WEST, UT 84404

PROFESSIONAL ENGINEER
BRIAN HICKS
No. 7709037-2202
STATE OF UTAH

REVISIONS

MARK	DATE	DESCRIPTION
1	11.4.24	PLAN REVIEW
2	11.20.24	REVISION 1

DATE:	04 OCT 2024
PROJECT NO:	EA24022TP
DRAWN BY:	CALVIN
CHK'D BY:	RICHARD

ONE-LINE DIAGRAM AND PANELBOARD SCHEDULES

E-401

THIS PRINT IS IN BLACK & WHITE

Autodesk Docs://EA24022TP - KC PEMB Structure - Ogden/24197 - KIMBERLY CLARK PEMB ELEC v25.rvt

11/20/2024 11:35:27 AM KCC STORES WAREHOUSE

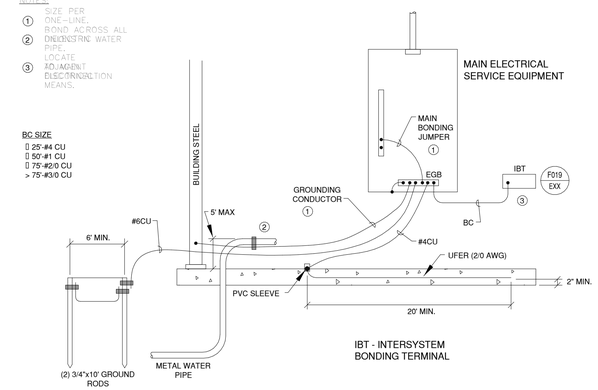

DIAGRAM F020 TYPICAL MAIN ELECTRICAL SERVICE GROUNDING

NTS

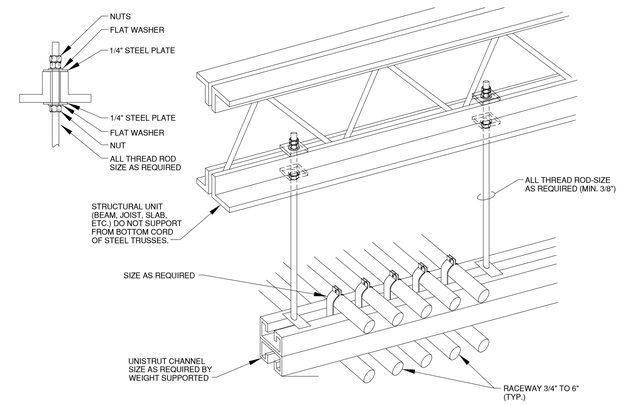

DIAGRAM H001 TYPICAL TRAPEZE CONDUIT RACK

NTS

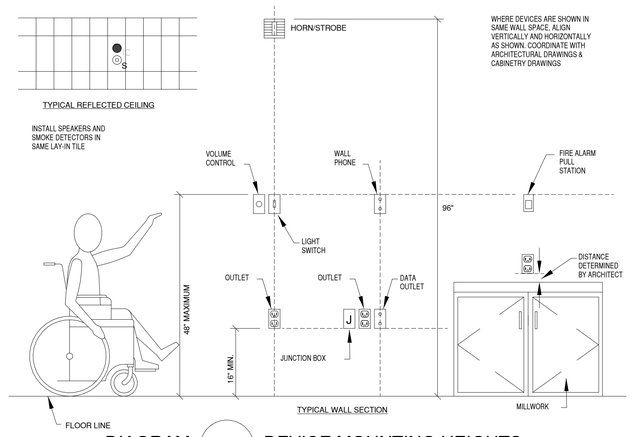

DIAGRAM R001 DEVICE MOUNTING HEIGHTS

NTS

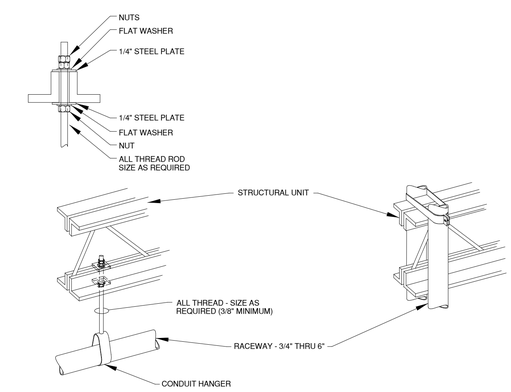

DIAGRAM H003 TYPICAL RACEWAY SUPPORT METHODS

NTS

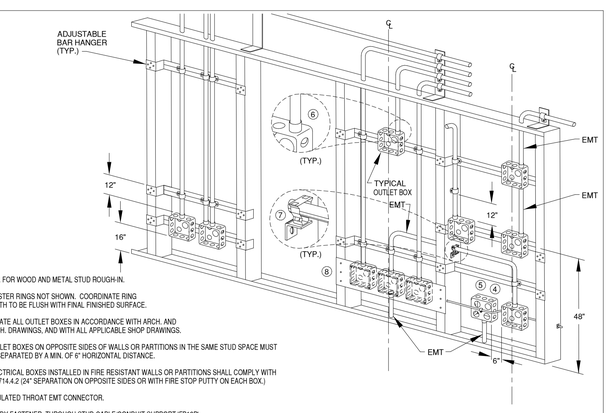

NOTES:

1. TYP. FOR WOOD AND METAL STUD ROUGH-IN.
2. PLASTER RINGS NOT SHOWN. COORDINATE RING DEPTH TO BE FLUSH WITH FINAL FINISHED SURFACE.
3. LOCATE ALL OUTLET BOXES IN ACCORDANCE WITH ARCH. AND MECH. DRAWINGS, AND WITH ALL APPLICABLE SHOP DRAWINGS.
4. OUTLET BOXES ON OPPOSITE SIDES OF WALLS OR PARTITIONS IN THE SAME STUD SPACE MUST BE SEPARATED BY A MIN. OF 6" HORIZONTAL DISTANCE.
5. ELECTRICAL BOXES INSTALLED IN FIRE RESISTANT WALLS OR PARTITIONS SHALL COMPLY WITH IBC 714.4.2 (24" SEPARATION ON OPPOSITE SIDES OR WITH FIRE STOP PUTTY ON EACH BOX.)
6. INSULATED THROAT EMT CONNECTOR.
7. CADDY FASTENER, THROUGH STUD CABLE/CONDUIT SUPPORT 'FB12P'.
8. CADDY BOX MOUNTING BRACKET 'RBS16'.

DIAGRAM H004 TYPICAL ROUGH IN REQUIREMENTS

NTS

BNA CONSULTING
4225 Lake Park Blvd, Suite 275
West Valley City, UT 84120
P: 801.532.2196
F: 801.532.2305
www.bnaconsulting.com
SALT LAKE ST. GEORGE

KCC STORES WAREHOUSE

2010 N. RULON WHITE BLVD.
FARR WEST, UT 84404

PROFESSIONAL ENGINEER
BRIAN HICKS
No. 7100037-2202
STATE OF UTAH

REVISIONS		
MARK	DATE	DESCRIPTION

DATE:	04 OCT 2024
PROJECT NO:	EA24022TP
DRAWN BY:	CALVIN
CHK'D BY:	RICHARD

ELECTRICAL DIAGRAMS

E-501